CMOS Digital Integrated Circuits Silicon Monolithic

7UL1T08FU

1. Functional Description

- 2-Input AND Gate with Level Shifting

2. Features

(1) Wide operating temperature range: T_{opr} = -40 to 125 °C
(2) Operating supply voltage range: V_{CC} = 2.3 V to 3.6 V
(3) The high-level input voltage is up translation to the power supply voltage.
(4) The high-level input voltage is down translation to the power supply voltage.
(5) 3.6 V tolerant inputs
(6) 3.6 V power-down protection is provided on output.

3. Packaging

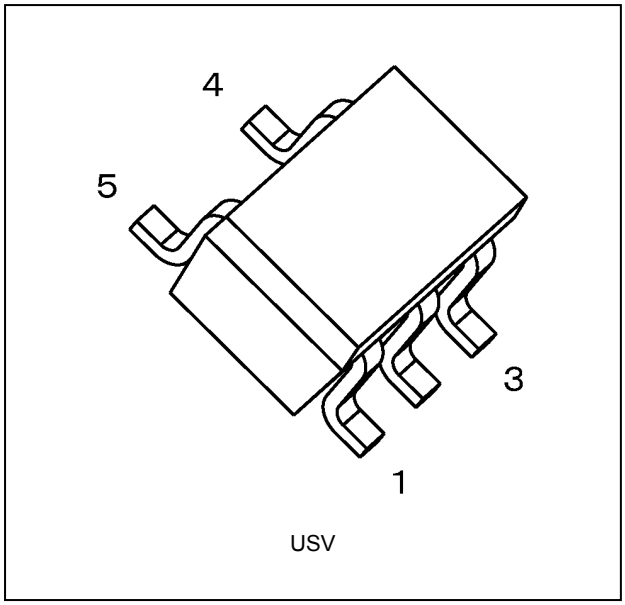

4. Marking and Pin Assignment

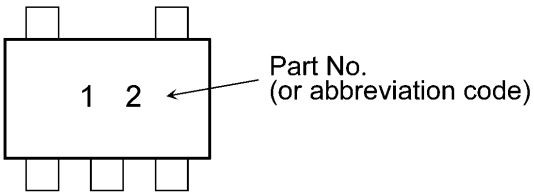

Marking

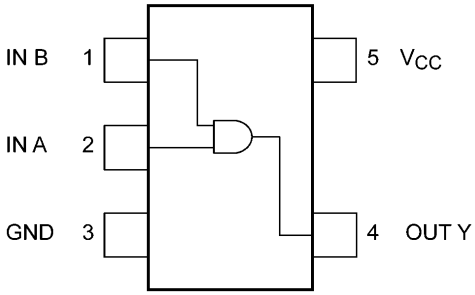

Pin Assignment (Top view)

Start of commercial production
2018-10

©2026
Toshiba Electronic Devices & Storage Corporation

Downloaded from Arrow.com.

5. IEC Logic Symbol

6. Truth Table

Input A	Input B	Output Y
L	L	L
L	H	L
H	L	L
H	H	H

7. Absolute Maximum Ratings (Note) (Unless otherwise specified, T_a = 25 °C)

Characteristics	Symbol	Note	Rating	Unit
Supply voltage	V_{CC}		-0.5 to 4.6	V
Input voltage	V_{IN}		-0.5 to 4.6	V
DC output voltage	V_{OUT}	(Note 1)	-0.5 to 4.6	V
		(Note 2)	-0.5 to V_{CC} + 0.5	
Input diode current	I_{IK}		-20	mA
Output diode current	I_{OK}	(Note 3)	-20	mA
DC output current	I_{OUT}		±25	mA
V_{CC}/ground current	I_{CC}		±50	mA
Power dissipation	P_D		200	mW
Storage temperature	T_{stg}		-65 to 150	°C

Note: Exceeding any of the absolute maximum ratings, even briefly, lead to deterioration in IC performance or even destruction.
Using continuously under heavy loads (e.g. the application of high temperature/current/voltage and the significant change in temperature, etc.) may cause this product to decrease in the reliability significantly even if the operating conditions (i.e. operating temperature/current/voltage, etc.) are within the absolute maximum ratings and the operating ranges.
Please design the appropriate reliability upon reviewing the Toshiba Semiconductor Reliability Handbook ("Handling Precautions"/"Derating Concept and Methods") and individual reliability data (i.e. reliability test report and estimated failure rate, etc).

Note 1: V_{CC} = 0 V
Note 2: High (H) or Low (L) state. I_{OUT} absolute maximum rating must be observed.
Note 3: V_{OUT} < GND

Downloaded from Arrow.com.

8. Operating Ranges (Note)

Characteristics	Symbol	Note	Test Condition	Rating	Unit
Supply voltage	V_{CC}		—	2.3 to 3.6	V
Input voltage	V_{IN}		—	0 to 3.6	V
Output voltage	V_{OUT}	(Note 1)	—	0 to 3.6	V
		(Note 2)	—	0 to V_{CC}	
Output current	I_{OH},I_{OL}		V_{CC} = 3.0 to 3.6 V	±8.0	mA
			V_{CC} = 2.3 to 2.7 V	±4.0	
Operating temperature	T_{opr}		—	-40 to 125	°C
Input rise and fall time	dt/dv		V_{CC} = 2.3 to 3.6 V	0 to 10	ns/V

Note: The operating ranges must be maintained to ensure the normal operation of the device.
Unused inputs must be tied to either V_{CC} or GND.

Note 1: V_{CC} = 0 V

Note 2: High (H) or Low (L) state.

Downloaded from Arrow.com.

9. Electrical Characteristics

9.1. DC Characteristics (Unless otherwise specified, T_a = 25 °C)

Characteristics	Symbol	Test Condition		V_{CC} (V)	Min	Typ.	Max	Unit
High-level input voltage	V_{IH}	—		2.3 to 2.7	1.1	—	—	V
				3.0 to 3.6	1.2	—	—	
Low-level input voltage	V_{IL}	—		2.3 to 2.7	—	—	0.35	V
				3.0 to 3.6	—	—	0.5	
High-level output voltage	V_{OH}	$V_{IN} = V_{IH}$	I_{OH} = -0.02 mA	2.3 to 3.6	V_{CC} -0.1	—	—	V
			I_{OH} = -4.0 mA	2.3 to 2.7	2.0	—	—	
			I_{OH} = -8.0 mA	3.0 to 3.6	2.48	—	—	
Low-level output voltage	V_{OL}	$V_{IN} = V_{IH}$ or V_{IL}	I_{OL} = 0.02 mA	2.3 to 3.6	—	—	0.1	V
			I_{OL} = 4.0 mA	2.3 to 2.7	—	—	0.4	
			I_{OL} = 8.0 mA	3.0 to 3.6	—	—	0.4	
Input leakage current	I_{IN}	V_{IN} = 0 to 3.6 V		0 to 3.6	—	—	±0.1	μA
Power-OFF leakage current	I_{OFF}	V_{IN} = 0 to 3.6 V, V_{OUT} = 0 to 3.6 V		0	—	—	1.0	μA
Quiescent supply current	I_{CC}	$V_{IN} = V_{CC}$ or GND		3.6	—	—	1.0	μA
	I_{CCT}	V_{IN} = 1.5 V (per input)		3.6	—	—	35	

9.2. DC Characteristics (Unless otherwise specified, T_a = -40 to 85 °C)

Characteristics	Symbol	Test Condition		V_{CC} (V)	Min	Max	Unit
High-level input voltage	V_{IH}	—		2.3 to 2.7	1.1	—	V
				3.0 to 3.6	1.2	—	
Low-level input voltage	V_{IL}	—		2.3 to 2.7	—	0.35	V
				3.0 to 3.6	—	0.5	
High-level output voltage	V_{OH}	$V_{IN} = V_{IH}$	I_{OH} = -0.02 mA	2.3 to 3.6	V_{CC} -0.1	—	V
			I_{OH} = -4.0 mA	2.3 to 2.7	2.0	—	
			I_{OH} = -8.0 mA	3.0 to 3.6	2.48	—	
Low-level output voltage	V_{OL}	$V_{IN} = V_{IH}$ or V_{IL}	I_{OL} = 0.02 mA	2.3 to 3.6	—	0.1	V
			I_{OL} = 4.0 mA	2.3 to 2.7	—	0.4	
			I_{OL} = 8.0 mA	3.0 to 3.6	—	0.4	
Input leakage current	I_{IN}	V_{IN} = 0 to 3.6 V		0 to 3.6	—	±0.5	μA
Power-OFF leakage current	I_{OFF}	V_{IN} = 0 to 3.6 V, V_{OUT} = 0 to 3.6 V		0	—	10.0	μA
Quiescent supply current	I_{CC}	$V_{IN} = V_{CC}$ or GND		3.6	—	10.0	μA
	I_{CCT}	V_{IN} = 1.5 V (per input)		3.6	—	40	

©2026
Toshiba Electronic Devices & Storage Corporation

Downloaded from Arrow.com.

9.3. DC Characteristics (Unless otherwise specified, T_a = -40 to 125 °C)

Characteristics	Symbol	Test Condition		V_{CC} (V)	Min	Max	Unit
High-level input voltage	V_{IH}	—		2.3 to 2.7	1.1	—	V
				3.0 to 3.6	1.2	—	
Low-level input voltage	V_{IL}	—		2.3 to 2.7	—	0.35	V
				3.0 to 3.6	—	0.5	
High-level output voltage	V_{OH}	$V_{IN} = V_{IH}$	I_{OH} = -0.02 mA	2.3 to 3.6	V_{CC} -0.1	—	V
			I_{OH} = -4.0 mA	2.3 to 2.7	1.95	—	
			I_{OH} = -8.0 mA	3.0 to 3.6	2.4	—	
Low-level output voltage	V_{OL}	$V_{IN} = V_{IH}$ or V_{IL}	I_{OL} = 0.02 mA	2.3 to 3.6	—	0.1	V
			I_{OL} = 4.0 mA	2.3 to 2.7	—	0.45	
			I_{OL} = 8.0 mA	3.0 to 3.6	—	0.45	
Input leakage current	I_{IN}	V_{IN} = 0 to 3.6 V		0 to 3.6	—	±2.0	μA
Power-OFF leakage current	I_{OFF}	V_{IN} = 0 to 3.6 V V_{OUT} = 0 to 3.6 V		0	—	80.0	μA
Quiescent supply current	I_{CC}	$V_{IN} = V_{CC}$ or GND		3.6	—	80.0	μA
	I_{CCT}	V_{IN} = 1.5 V (per input)		3.6	—	55	

9.4. AC Characteristics (Unless otherwise specified, T_a = 25 °C, Input: $t_r = t_f$ = 3 ns)

Characteristics	Symbol	Note	Test Condition	V_{CC} (V)	V_{IN} (V)	Min	Typ.	Max	Unit
Propagation delay time	t_{PLH}		C_L = 15 pF R_L = 1 MΩ See Fig. 9.7.1, Table 9.7.1	2.3 to 2.7	1.65 to 1.95	—	3.6	5.1	ns
					2.3 to 2.7	—	2.9	4.3	
					3.0 to 3.6	—	2.5	3.8	
				3.0 to 3.6	1.65 to 1.95	—	3.6	4.7	
					2.3 to 2.7	—	2.7	3.8	
					3.0 to 3.6	—	2.2	3.3	
	t_{PHL}		C_L = 15 pF R_L = 1 MΩ See Fig. 9.7.1, Table 9.7.1	2.3 to 2.7	1.65 to 1.95	—	3.5	5.1	ns
					2.3 to 2.7	—	3.9	5.5	
					3.0 to 3.6	—	4.2	5.9	
				3.0 to 3.6	1.65 to 1.95	—	2.9	3.8	
					2.3 to 2.7	—	3.0	4.1	
					3.0 to 3.6	—	3.2	4.4	
Input capacitance	C_{IN}		—	3.6	—	—	3	—	pF
Power dissipation capacitance	C_{PD}	(Note 1)	—	2.3 to 3.6	—	—	9	—	pF

Note 1: C_{PD} is defined as the value of the internal equivalent capacitance which is calculated from the operating current consumption without load. Average operating current can be obtained by the equation.

$I_{CC(opr)} = C_{PD} \cdot V_{CC} \cdot f_{IN} + I_{CC}$

Downloaded from Arrow.com.

9.5. AC Characteristics
(Unless otherwise specified, T_a = -40 to 85 °C, Input: t_r = t_f = 3 ns)

Characteristics	Symbol	Test Condition	V_{CC} (V)	V_{IN} (V)	Min	Max	Unit
Propagation delay time	t_{PLH}	C_L = 15 pF R_L = 1 MΩ See Fig. 9.7.1, Table 9.7.1	2.3 to 2.7	1.65 to 1.95	1.0	5.9	ns
				2.3 to 2.7	1.0	5.1	
				3.0 to 3.6	1.0	4.6	
			3.0 to 3.6	1.65 to 1.95	1.0	5.6	
				2.3 to 2.7	1.0	4.7	
				3.0 to 3.6	1.0	4.1	
	t_{PHL}	C_L = 15 pF R_L = 1 MΩ See Fig. 9.7.1, Table 9.7.1	2.3 to 2.7	1.65 to 1.95	1.0	6.0	ns
				2.3 to 2.7	1.0	6.4	
				3.0 to 3.6	1.0	6.9	
			3.0 to 3.6	1.65 to 1.95	1.0	4.8	
				2.3 to 2.7	1.0	5.0	
				3.0 to 3.6	1.0	5.3	

9.6. AC Characteristics
(Unless otherwise specified, T_a = -40 to 125 °C, Input: t_r = t_f = 3 ns)

Characteristics	Symbol	Test Condition	V_{CC} (V)	V_{IN} (V)	Min	Max	Unit
Propagation delay time	t_{PLH}	C_L = 15 pF R_L = 1 MΩ See Fig. 9.7.1, Table 9.7.1	2.3 to 2.7	1.65 to 1.95	1.0	6.5	ns
				2.3 to 2.7	1.0	5.7	
				3.0 to 3.6	1.0	5.2	
			3.0 to 3.6	1.65 to 1.95	1.0	6.2	
				2.3 to 2.7	1.0	5.3	
				3.0 to 3.6	1.0	4.7	
	t_{PHL}	C_L = 15 pF R_L = 1 MΩ See Fig. 9.7.1, Table 9.7.1	2.3 to 2.7	1.65 to 1.95	1.0	6.6	ns
				2.3 to 2.7	1.0	7.0	
				3.0 to 3.6	1.0	7.6	
			3.0 to 3.6	1.65 to 1.95	1.0	5.5	
				2.3 to 2.7	1.0	5.6	
				3.0 to 3.6	1.0	5.9	

©2026
Toshiba Electronic Devices & Storage Corporation

Downloaded from Arrow.com.

9.7. AC Waveform

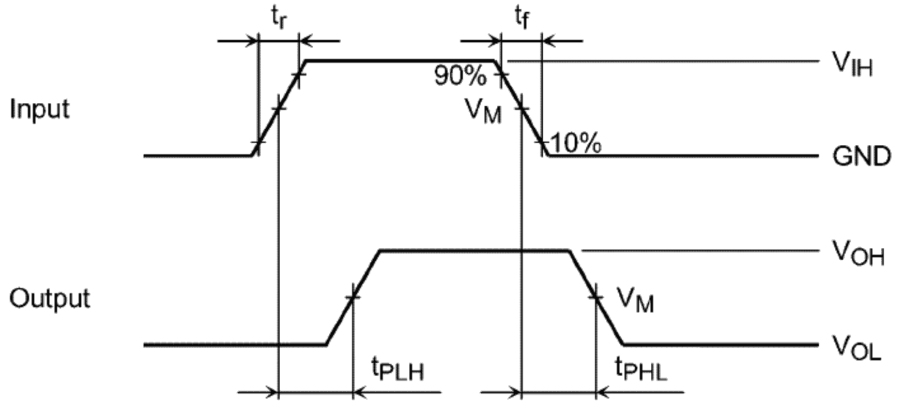

Fig. 9.7.1 t_{PLH}, t_{PHL}

Table 9.7.1 AC Waveform Symbols

	Symbol	V_{CC} = 3.3 ± 0.3 V	V_{CC} = 2.5 ± 0.2 V
Input	V_{IH}	V_{IN}	V_{IN}
	V_M	$V_{IN}/2$	$V_{IN}/2$
Output	V_M	$V_{CC}/2$	$V_{CC}/2$

Downloaded from Arrow.com.

Package Dimensions

Unit: mm

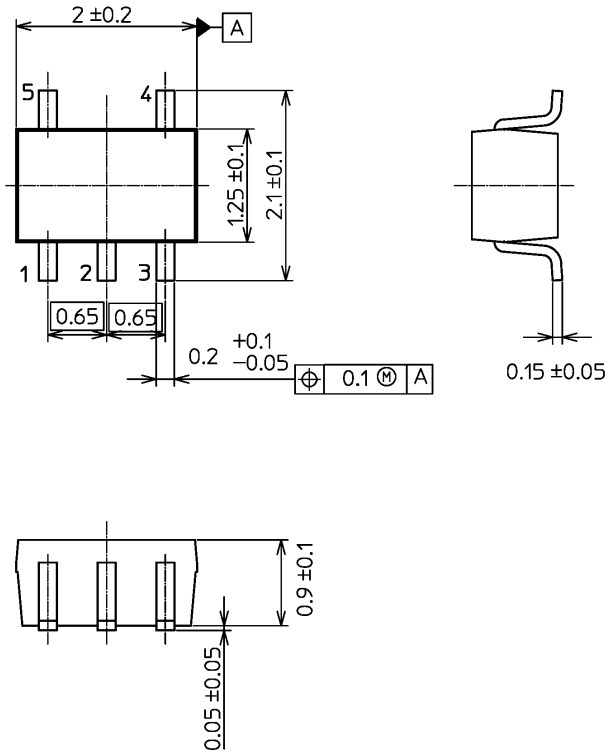

Weight: 6.2 mg (typ.)

Package Name(s)
JEDEC: SOT-353
Nickname: USV

Downloaded from Arrow.com.

RESTRICTIONS ON PRODUCT USE

Toshiba Corporation and its subsidiaries and affiliates are collectively referred to as "TOSHIBA".
Hardware, software and systems described in this document are collectively referred to as "Product".

- TOSHIBA reserves the right to make changes to the information in this document and related Product without notice.
- This document and any information herein may not be reproduced without prior written permission from TOSHIBA. Even with TOSHIBA's written permission, reproduction is permissible only if reproduction is without alteration/omission.
- Though TOSHIBA works continually to improve Product's quality and reliability, Product can malfunction or fail. Customers are responsible for complying with safety standards and for providing adequate designs and safeguards for their hardware, software and systems which minimize risk and avoid situations in which a malfunction or failure of Product could cause loss of human life, bodily injury or damage to property, including data loss or corruption. Before customers use the Product, create designs including the Product, or incorporate the Product into their own applications, customers must also refer to and comply with (a) the latest versions of all relevant TOSHIBA information, including without limitation, this document, the specifications, the data sheets and application notes for Product and the precautions and conditions set forth in the "TOSHIBA Semiconductor Reliability Handbook" and (b) the instructions for the application with which the Product will be used with or for. Customers are solely responsible for all aspects of their own product design or applications, including but not limited to (a) determining the appropriateness of the use of this Product in such design or applications; (b) evaluating and determining the applicability of any information contained in this document, or in charts, diagrams, programs, algorithms, sample application circuits, or any other referenced documents; and (c) validating all operating parameters for such designs and applications. **TOSHIBA ASSUMES NO LIABILITY FOR CUSTOMERS' PRODUCT DESIGN OR APPLICATIONS.**
- **PRODUCT IS NEITHER INTENDED NOR WARRANTED FOR USE IN EQUIPMENTS OR SYSTEMS THAT REQUIRE EXTRAORDINARILY HIGH LEVELS OF QUALITY AND/OR RELIABILITY, AND/OR A MALFUNCTION OR FAILURE OF WHICH MAY CAUSE LOSS OF HUMAN LIFE, BODILY INJURY, SERIOUS PROPERTY DAMAGE AND/OR SERIOUS PUBLIC IMPACT ("UNINTENDED USE").** Except for specific applications as expressly stated in this document, Unintended Use includes, without limitation, equipment used in nuclear facilities, equipment used in the aerospace industry, Class 3 medical devices, equipment used for automobiles, and military vehicles and munitions. **IF YOU USE PRODUCT FOR UNINTENDED USE, TOSHIBA ASSUMES NO LIABILITY FOR PRODUCT.** For details, please contact your TOSHIBA sales representative or contact us via our website.
- Do not disassemble, analyze, reverse-engineer, alter, modify, translate or copy Product, whether in whole or in part.
- Product shall not be used for or incorporated into any products or systems whose manufacture, use, or sale is prohibited under any applicable laws or regulations.
- The information contained herein is presented only as guidance for Product use. No responsibility is assumed by TOSHIBA for any infringement of patents or any other intellectual property rights of third parties that may result from the use of Product. No license to any intellectual property right is granted by this document, whether express or implied, by estoppel or otherwise.
- **ABSENT A WRITTEN SIGNED AGREEMENT, EXCEPT AS PROVIDED IN THE RELEVANT TERMS AND CONDITIONS OF SALE FOR PRODUCT, AND TO THE MAXIMUM EXTENT ALLOWABLE BY LAW, TOSHIBA (1) ASSUMES NO LIABILITY WHATSOEVER, INCLUDING WITHOUT LIMITATION, INDIRECT, CONSEQUENTIAL, SPECIAL, OR INCIDENTAL DAMAGES OR LOSS, INCLUDING WITHOUT LIMITATION, LOSS OF PROFITS, LOSS OF OPPORTUNITIES, BUSINESS INTERRUPTION AND LOSS OF DATA, AND (2) DISCLAIMS ANY AND ALL EXPRESS OR IMPLIED WARRANTIES AND CONDITIONS RELATED TO SALE, USE OF PRODUCT, OR INFORMATION, INCLUDING WARRANTIES OR CONDITIONS OF MERCHANTABILITY, FITNESS FOR A PARTICULAR PURPOSE, ACCURACY OF INFORMATION, OR NONINFRINGEMENT.**
- Do not use or otherwise make available Product or related software or technology for any military purposes, including without limitation, for the design, development, use, stockpiling or manufacturing of nuclear, chemical, or biological weapons or missile technology products (mass destruction weapons). Product and related software and technology may be controlled under the applicable export laws and regulations including, without limitation, the Japanese Foreign Exchange and Foreign Trade Law and the U.S. Export Administration Regulations. Export and re-export of Product or related software or technology are strictly prohibited except in compliance with all applicable export laws and regulations.
- Please contact your TOSHIBA sales representative for details as to environmental matters such as the RoHS compatibility of Product. Please use Product in compliance with all applicable laws and regulations that regulate the inclusion or use of controlled substances, including without limitation, the EU RoHS Directive. **TOSHIBA ASSUMES NO LIABILITY FOR DAMAGES OR LOSSES OCCURRING AS A RESULT OF NONCOMPLIANCE WITH APPLICABLE LAWS AND REGULATIONS.**

TOSHIBA ELECTRONIC DEVICES & STORAGE CORPORATION
https://toshiba.semicon-storage.com/

©2026
Toshiba Electronic Devices & Storage Corporation

Downloaded from Arrow.com.