Data Sheet | Item Number: 859-762

Optocoupler module; Nominal input voltage: 24 VDC; Output voltage range: 3 ... 30 VDC; Limiting continuous current: 3 A; 2-wire connection; Yellow status indicator; Module width: 6 mm; gray

https://www.wago.com/859-762

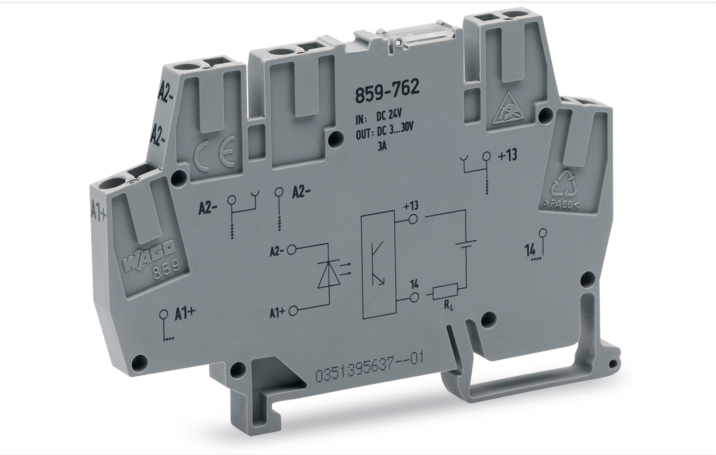

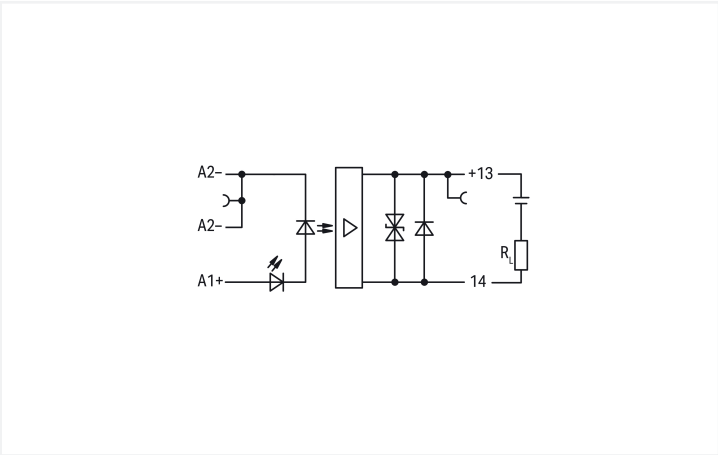

Color: gray

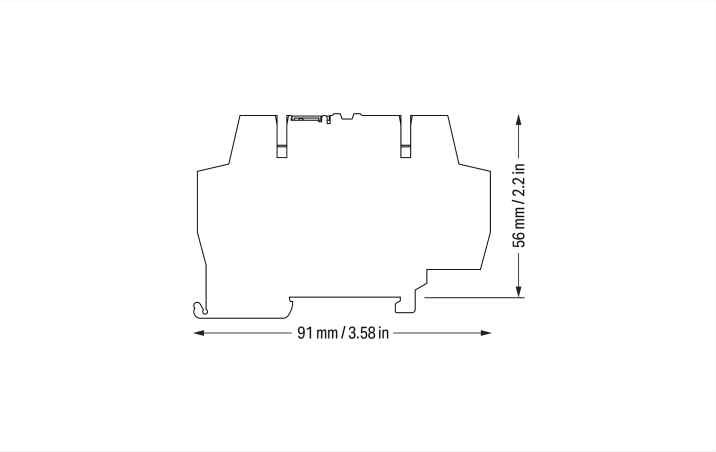

Notes

Note	Optocouplers and solid state relays are designed for use in signal processing networks that are not supplied directly by the low-voltage power supply network.

Technical data

Control circuit

Nominal input voltage U_N	24 VDC
Input voltage range (low level)	0 ... 9 VDC
Input voltage range (high level)	19 ... 27 VDC
Nominal input current at U_N	7 mA

Load circuit

Circuit type	2-wire connection
Limiting continuous current	3 A
Peak output current	25 A
Nominal output voltage	24 VDC
Output voltage range	3 ... 30 VDC
Voltage drop	≤ 0.2 VDC
Turn-on time	≤ 25 µs
Turn-off time	≤ 450 µs
Switching frequency	≤ 350 Hz

Downloaded from Arrow.com.

Signaling

Status indicator	Yellow LED

Safety and protection

Rated Voltage	300 V
Overvoltage category	II
Pollution degree	2
Dielectric strength (control/load circuit) (AC, 1 min)	2.5 kVrms
Insulation type (control/load circuit)	Basic insulation
Insulation type (between adjacent devices of the same type)	Reinforced insulation (safe isolation)
Insulation type (to adjacent devices of different types)	Basic insulation
Protection type	IP20; in connected state or when using 859-525 end plate

Connection Data

Connection technology	CAGE CLAMP®
Solid conductor	0.08 … 2.5 mm² / 28 … 14 AWG
Fine-stranded conductor	0.08 … 2.5 mm² / 28 … 14 AWG
Fine-stranded conductor; with insulated ferrule	0.08 … 1.5 mm² / 28 … 16 AWG
Strip length	5 … 6 mm / 0.2 … 0.24 inches

Physical data

Width	6 mm / 0.236 inches
Height	91 mm / 3.583 inches
Depth from upper-edge of DIN-rail	56 mm / 2.205 inches

Mechanical data

Mounting type	DIN-35 rail
Mounting position	horizontal (standing/lying); vertical

Material data

Note (material data)	Information on material specifications can be found here
Color	gray
Insulation material (main housing)	Polyamide (PA66)
Material group	I
Flammability class per UL94	V0
Fire load	0.283 MJ
Weight	18.7 g

Environmental requirements

Ambient temperature (operation at U_N)	-25 … +55 °C
Ambient temperature (storage)	-40 … +70 °C
Processing temperature	-25 … +50 °C
Temperature range of connection cable	≥ ($T_{ambient}$ + 20 K)
Relative humidity	5 … 95 % (no condensation permissible)
Operating altitude (max.)	2000 m

Downloaded from Arrow.com.

Standards and Specifications

Standards/specifications	EN 61010-2-201 EN 61000-6-2 EN 61000-6-3 EN 61373

Commercial data

Product Group	6 (INTERFACE ELECTRONIC)
PU (SPU)	1 pcs
Packaging type	Bag
Country of origin	DE
GTIN	4066966423433
Customs tariff number	85365005000

Product Classification

UNSPSC	39121522
eCl@ss 10.0	27-26-15-03
eCl@ss 9.0	27-26-15-03
ETIM 9.0	EC001504
ETIM 10.0	EC001504
ECCN	NO US CLASSIFICATION

Environmental Product Compliance

CAS-No.	1303-86-2 7439-92-1 79-94-7
REACH Candidate List Substance	2,2',6,6'-tetrabromo-4,4'-isopropylidenediphenol Diboron trioxide Lead
RoHS Compliance Status	Compliant,With Exemption
RoHS Exemption	7(c)-I
SCIP notification number (Austria)	906cce6d-f6e2-4ce0-820e-bd97c5da6cde
SCIP notification number (Belgium)	a06dc191-7fc6-4f73-99a8-9025a46b9f2a
SCIP notification number (Bulgaria)	10b91ba4-4206-4e73-b7d9-9e7c7936a931
SCIP notification number (Czech Republic)	c0b45a96-37bc-49c8-914f-77816ce31a9a
SCIP notification number (Denmark)	0311b303-a23c-40d4-a4ff-23b76b35f683
SCIP notification number (Finland)	9c50e769-f95f-4287-8881-2199bc32db1c
SCIP notification number (France)	da901a98-37b5-4111-b9e9-5aade0984dc4
SCIP notification number (Germany)	c0d14cc6-9aa9-448d-bc7a-c17012b16baf
SCIP notification number (Hungary)	0c0f7385-61de-447a-b2c9-f7d44719057b
SCIP notification number (Italy)	30ddc448-01db-4580-a384-30d23bdd4f6e
SCIP notification number (Netherlands)	04b94f0b-c8db-4846-8447-eda22245b92c
SCIP notification number (Poland)	cee19bff-2173-4d48-b247-8e0dfbd3a381
SCIP notification number (Romania)	09a82c8e-1f4c-4383-b386-1456c7681c2f
SCIP notification number (Sweden)	2b2ea7e9-a812-4625-9a69-94c83da1a22c

Downloaded from Arrow.com.

Approvals / Certificates

General approvals

Approval	Standard	Certificate Name
EAC GZO Almaty Standart	TP TC 020/2011	EAC CoC 03081

Downloads

Environmental Product Compliance

Compliance Search

Environmental Product Compliance 859-762

Documentation

Bid Text

859-762	19.02.2019	xml 3.78 KB	
859-762	20.02.2019	docx 15.28 KB	

Instruction Leaflet

Relay modules, Optocou-pler modules	V 2.0.0 19.01.2022	pdf 2066.27 KB	

CAD/CAE-Data

CAD data

2D/3D Models 859-762

CAE data

EPLAN Data Portal 859-762

WSCAD Universe 859-762

ZUKEN Portal 859-762

1 Compatible Products

1.1 Optional Accessories

1.1.1 End plate

1.1.1.1 End plate

Item No.: 859-525
End and intermediate plate; 1 mm thick; gray

Downloaded from Arrow.com.

1.1.1.2 Intermediate plate

Item No.: 859-525
End and intermediate plate; 1 mm thick; gray

1.1.2 Ferrule

1.1.2.1 Ferrule

Item No.: 216-321
Ferrule; Sleeve for 0.25 mm² / AWG 24; insulated; electro-tin plated; yellow

Item No.: 216-322
Ferrule; Sleeve for 0.34 mm² / 22 AWG; insulated; electro-tin plated; light turquoise

Item No.: 216-221
Ferrule; Sleeve for 0.5 mm² / 20 AWG; insulated; electro-tin plated; white

Item No.: 216-222
Ferrule; Sleeve for 0.75 mm² / 18 AWG; insulated; electro-tin plated; gray

Item No.: 216-223
Ferrule; Sleeve for 1 mm² / AWG 18; insulated; electro-tin plated; red

Item No.: 216-224
Ferrule; Sleeve for 1.5 mm² / AWG 16; insulated; electro-tin plated; black

1.1.3 Jumper

1.1.3.1 Jumper

Item No.: 859-410/000-006
Jumper; for jumper slot; 10-way; insulated; blue

Item No.: 859-410
Jumper; for jumper slot; 10-way; insulated; light gray

Item No.: 859-410/000-005
Jumper; for jumper slot; 10-way; insulated; red

Item No.: 859-410/000-029
Jumper; for jumper slot; 10-way; insulated; yellow

Item No.: 859-402/000-006
Jumper; for jumper slot; 2-way; insulated; blue

Item No.: 859-402
Jumper; for jumper slot; 2-way; insulated; light gray

Item No.: 859-402/000-005
Jumper; for jumper slot; 2-way; insulated; red

Item No.: 859-402/000-029
Jumper; for jumper slot; 2-way; insulated; yellow

Item No.: 859-403/000-006
Jumper; for jumper slot; 3-way; insulated; blue

Item No.: 859-403
Jumper; for jumper slot; 3-way; insulated; light gray

Item No.: 859-403/000-005
Jumper; for jumper slot; 3-way; insulated; red

Item No.: 859-403/000-029
Jumper; for jumper slot; 3-way; insulated; yellow

Item No.: 859-404/000-006
Jumper; for jumper slot; 4-way; insulated; blue

Item No.: 859-404
Jumper; for jumper slot; 4-way; insulated; light gray

Item No.: 859-404/000-005
Jumper; for jumper slot; 4-way; insulated; red

Item No.: 859-404/000-029
Jumper; for jumper slot; 4-way; insulated; yellow

Item No.: 859-405/000-006
Jumper; for jumper slot; 5-way; insulated; blue

Item No.: 859-405
Jumper; for jumper slot; 5-way; insulated; light gray

Item No.: 859-405/000-005
Jumper; for jumper slot; 5-way; insulated; red

Item No.: 859-405/000-029
Jumper; for jumper slot; 5-way; insulated; yellow

Item No.: 859-406/000-006
Jumper; for jumper slot; 6-way; insulated; blue

Item No.: 859-406
Jumper; for jumper slot; 6-way; insulated; light gray

Item No.: 859-406/000-005
Jumper; for jumper slot; 6-way; insulated; red

Item No.: 859-406/000-029
Jumper; for jumper slot; 6-way; insulated; yellow

Item No.: 859-407/000-006
Jumper; for jumper slot; 7-way; insulated; blue

Item No.: 859-407
Jumper; for jumper slot; 7-way; insulated; light gray

Item No.: 859-407/000-005
Jumper; for jumper slot; 7-way; insulated; red

Item No.: 859-407/000-029
Jumper; for jumper slot; 7-way; insulated; yellow

Item No.: 859-408/000-006
Jumper; for jumper slot; 8-way; insulated; blue

Item No.: 859-408
Jumper; for jumper slot; 8-way; insulated; light gray

Item No.: 859-408/000-005
Jumper; for jumper slot; 8-way; insulated; red

Item No.: 859-408/000-029
Jumper; for jumper slot; 8-way; insulated; yellow

 Continued on next page

Downloaded from Arrow.com.

1.1.3.1 Jumper

Item No.: 859-409/000-006
Jumper; for jumper slot; 9-way; insulated; blue

Item No.: 859-409
Jumper; for jumper slot; 9-way; insulated; light gray

Item No.: 859-409/000-005
Jumper; for jumper slot; 9-way; insulated; red

Item No.: 859-409/000-029
Jumper; for jumper slot; 9-way; insulated; yellow

1.1.4 Marking

1.1.4.1 Marker

Item No.: 2009-145
Mini-WSB Inline; for Smart Printer; 1700 pieces on roll; stretchable 5 - 5.2 mm; plain; snap-on type; white

Item No.: 248-502
Mini-WSB marking card; as card; MARKED; 1 ... 10 (10x); not stretchable; Horizontal marking; snap-on type; white

Item No.: 248-503
Mini-WSB marking card; as card; MARKED; 11 ... 20 (10x); not stretchable; Horizontal marking; snap-on type; white

Item No.: 248-504
Mini-WSB marking card; as card; MARKED; 21 ... 30 (10x); not stretchable; Horizontal marking; snap-on type; white

Item No.: 248-506
Mini-WSB marking card; as card; MARKED; 41 ... 50 (10x); not stretchable; Horizontal marking; snap-on type; white

Item No.: 248-501
Mini-WSB marking card; as card; not stretchable; plain; snap-on type; white

1.1.4.2 Marking device

Item No.: 210-110
Fiber-tip pen

1.1.5 Test and measurement

1.1.5.1 Testing accessories

Item No.: 859-500
WAGO Test pin; 1 mm Ø; 30 V AC / 60 V DC; CAT0; 1 A; 10 mm uninsulated; Test lead for soldering up to 0,5mm²

1.1.6 Tool

1.1.6.1 Operating tool

Item No.: 210-720
Operating tool; Blade: 3.5 x 0.5 mm; with a partially insulated shaft; multicoloured

Downloaded from Arrow.com.

Installation Notes

Conductor termination

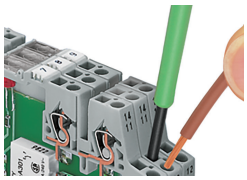

Conductor termination

Commoning

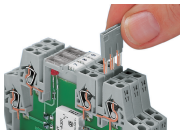

Easy commoning using adjacent jumpers

Marking

Marking via Mini-WSB Quick Marking System

Downloaded from Arrow.com.