Dear customer

ROHM Co., Ltd. ("ROHM"), on the 1st day of April, 2024,
has absorbed into merger with 100%-owned subsidiary of LAPIS Technology Co., Ltd.

Therefore, all references to "LAPIS Technology Co., Ltd.", "LAPIS Technology" and/or "LAPIS" in this document shall be replaced with "ROHM Co., Ltd."
Furthermore, there are no changes to the documents relating to our products other than the company name, the company trademark, logo, etc.

Thank you for your understanding.

ROHM Co., Ltd.
April 1, 2024

Downloaded from Arrow.com.

FEBL62Q2723RB-01

RB-D62Q2723GA64
User's Manual

Issue Date: June 30, 2023

Downloaded from Arrow.com.

Notes

1) The information contained herein is subject to change without notice.

2) When using LAPIS Technology Products, refer to the latest product information (data sheets, user's manuals, application notes, etc.), and ensure that usage conditions (absolute maximum ratings, recommended operating conditions, etc.) are within the ranges specified. LAPIS Technology disclaims any and all liability for any malfunctions, failure or accident arising out of or in connection with the use of LAPIS Technology Products outside of such usage conditions specified ranges, or without observing precautions. Even if it is used within such usage conditions specified ranges, semiconductors can break down and malfunction due to various factors. Therefore, in order to prevent personal injury, fire or the other damage from break down or malfunction of LAPIS Technology Products, please take safety at your own risk measures such as complying with the derating characteristics, implementing redundant and fire prevention designs, and utilizing backups and fail-safe procedures. You are responsible for evaluating the safety of the final products or systems manufactured by you.

3) Descriptions of circuits, software and other related information in this document are provided only to illustrate the standard operation of semiconductor products and application examples. You are fully responsible for the incorporation or any other use of the circuits, software, and information in the design of your product or system. And the peripheral conditions must be taken into account when designing circuits for mass production. LAPIS Technology disclaims any and all liability for any losses and damages incurred by you or third parties arising from the use of these circuits, software, and other related information.

4) No license, expressly or implied, is granted hereby under any intellectual property rights or other rights of LAPIS Technology or any third party with respect to LAPIS Technology Products or the information contained in this document (including but not limited to, the Product data, drawings, charts, programs, algorithms, and application examples、etc.). Therefore LAPIS Technology shall have no responsibility whatsoever for any dispute, concerning such rights owned by third parties, arising out of the use of such technical information.

5) The Products are intended for use in general electronic equipment (AV/OA devices, communication, consumer systems, gaming/entertainment sets, etc.) as well as the applications indicated in this document. For use of our Products in applications requiring a high degree of reliability (as exemplified below), please be sure to contact a LAPIS Technology representative and must obtain written agreement: transportation equipment (cars, ships, trains, etc.), primary communication equipment, traffic lights, fire/crime prevention, safety equipment, medical systems, servers, solar cells, and power transmission systems, etc. LAPIS Technology disclaims any and all liability for any losses and damages incurred by you or third parties arising by using the Product for purposes not intended by us. Do not use our Products in applications requiring extremely high reliability, such as aerospace equipment, nuclear power control systems, and submarine repeaters, etc.

6) The Products specified in this document are not designed to be radiation tolerant.

7) LAPIS Technology has used reasonable care to ensure the accuracy of the information contained in this document. However, LAPIS Technology does not warrant that such information is error-free and LAPIS Technology shall have no responsibility for any damages arising from any inaccuracy or misprint of such information.

8) Please use the Products in accordance with any applicable environmental laws and regulations, such as the RoHS Directive. LAPIS Technology shall have no responsibility for any damages or losses resulting non-compliance with any applicable laws or regulations.

9) When providing our Products and technologies contained in this document to other countries, you must abide by the procedures and provisions stipulated in all applicable export laws and regulations, including without limitation the US Export Administration Regulations and the Foreign Exchange and Foreign Trade Act..

10) Please contact a ROHM sales office if you have any questions regarding the information contained in this document or LAPIS Technology's Products.

11) This document, in part or in whole, may not be reprinted or reproduced without prior consent of LAPIS Technology.

(Note) "LAPIS Technology" as used in this document means LAPIS Technology Co., Ltd.

Copyright 2023 LAPIS Technology Co., Ltd.

LAPIS Technology Co.,Ltd.

2-4-8 Shinyokohama, Kouhoku-ku, Yokohama 222-8575, Japan
https://www.lapis-tech.com/en/

Downloaded from Arrow.com.

Preface

This manual describes about the ML62Q2723 Reference Board : RB-D62Q2723GA64.

Refer to following documents when necessary.

- ML62Q2700 Group User's Manual
  Provides the detailed information about the microcontroller ML62Q2700 Group.

- EASE1000 V2 User's Manual
  Provides the information on how to use the On-chip emulator EASE1000 V2.

Downloaded from Arrow.com.

Table of Contents

1. Overview 1
1.1. Features 1
1.2. Outline Diagram 2
2. Function 3
2.1. Power Circuit 3
2.2. Connection for EASE1000 V2 (CNE) 4
2.3. LED (P20, P21, P22) 5
2.4. XT0/PIO0, XT1/PIO1 5
2.5. P23, P24, P25, P26 6
3. User Interface 7
3.1. CN1, CN2 7
3.2. CNE 9
4. Precaution for usage 10
5. PCB specification, BOM list and Schematic 11
5.1. PCB specification 11
5.2. BOM list 12
5.3. Schematic 12
6. Revision History 14

Downloaded from Arrow.com.

1. Overview

1.1. Features

The RB-D62Q2723GA64 can be used for learning 'how to use' the ML62Q2723, on which the user needs to provide additional external components if necessary. By using the RB-D62Q2723GA64 together with the LAPIS Technology's on-chip emulator EASE1000 V2 and the provided software development environment, the user can develop software, debug and program the Flash. Also, by connecting an external power supply to RB-D62Q2723GA64, it can be used independently without connecting a EASE1000 V2.
Before using RB-D62Q2723GA64, be sure to understand and keep in mind the following information.

1.1.1. Features

- The board is provided with ML62Q2723 64pin QFP.
- Mounted with the linked connector to EASE1000 V2.
- Through-holes for connecting the pins of LSI to external pheripheral boards.
- Power supply is selectable; supplied from the on-chip emulator EASE1000 V2 or CN1_3pin/CN2_2pin .
- Mounted with Crystal (32.768KHz)
- Mounted with LED (P20,P21,P22).
- Foot pattern with components for Successive Approximation Type A/D Converter is available (P23,P24,P25,P26).

1.1.2. Hardware specifications

Table 1 shows the hardware specifications of RB-D62Q2723GA64.

Table 1 Hardware specifications

Mounted LSI	U1 : ML62Q2723 64pin QFP
Other Mounted components	PWR: Jumper for selecting the power supply input (3pin pin-header and short pin)
	J1: Jumper for selecting TEST1_N pin (3pin pin-header and short pin)
	J2: Jumper for selecting P01/TEST0 pin (3pin pin-header and short pin)
	P20-P22: LEDs
	R1-R3: Resistors for LEDs by P20 to P22
	J3-J5: Jumper-chip for connecting LEDs
	X1, C3, C4: Crystal Oscillator (32.768kHz) and capacitors
	CNE: Connector for EASE1000 V2(14pin connector)
	C1, C5, C15: Capacitors for VDD and VDDL
	R4: Pull-up resistor for RESET_N
Pads (or/and) Through holes for mounting components	CN1-CN2: Connectors for user application system (50pin, 2.54mm pitch, φ1.0mm)
	C2, C16: Capacitors for VDD
	C10-C14, J8: Capacitors and jumper-chip for Successive Approximation Type A/D Converter
	J6-J7: CN1 connection jumper-chip
Power check pin	VDD, VSS, UVDD: φ0.8mm
Operating voltage	+1.8V to +5.5V
Board size	55.88 mm x 93.98 mm

For more information about the connection of the mounted components, see the schematic.

Downloaded from Arrow.com.

1.2. Outline Diagram

Fig. 1 shows the RB-D62Q2723GA64.

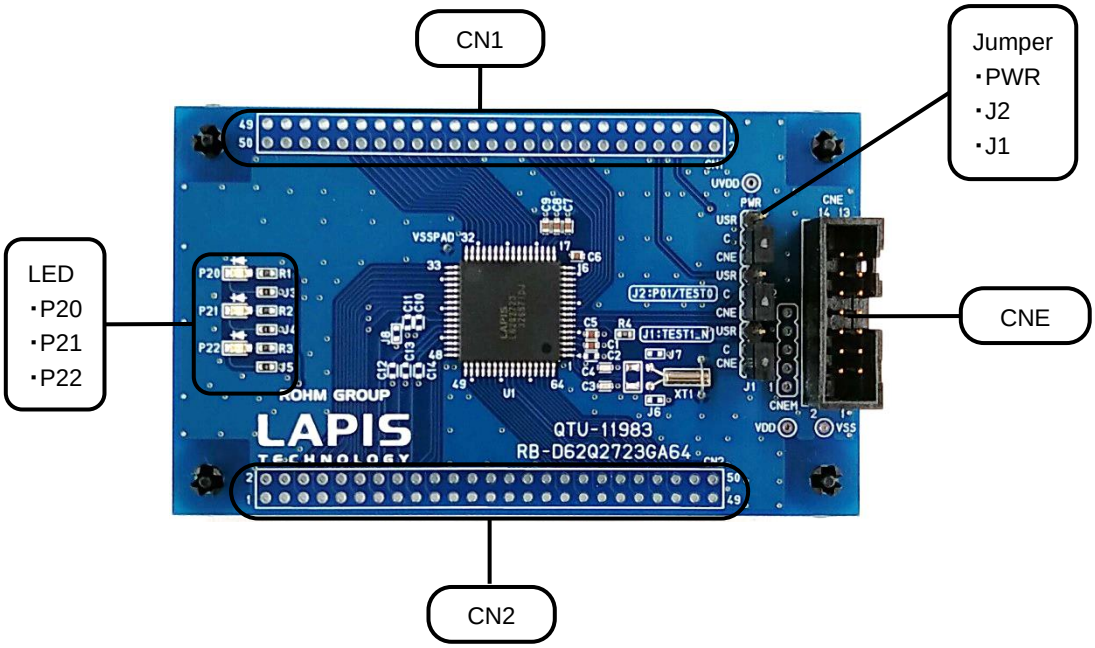

Fig. 1 Outline Diagram

Downloaded from Arrow.com.

2. Function

2.1. Power Circuit

The input toV_{DD} can be selected from 3.3VOUT of EASE1000 V2 or CN1_3pin/CN2_2pin by PWR jumper.

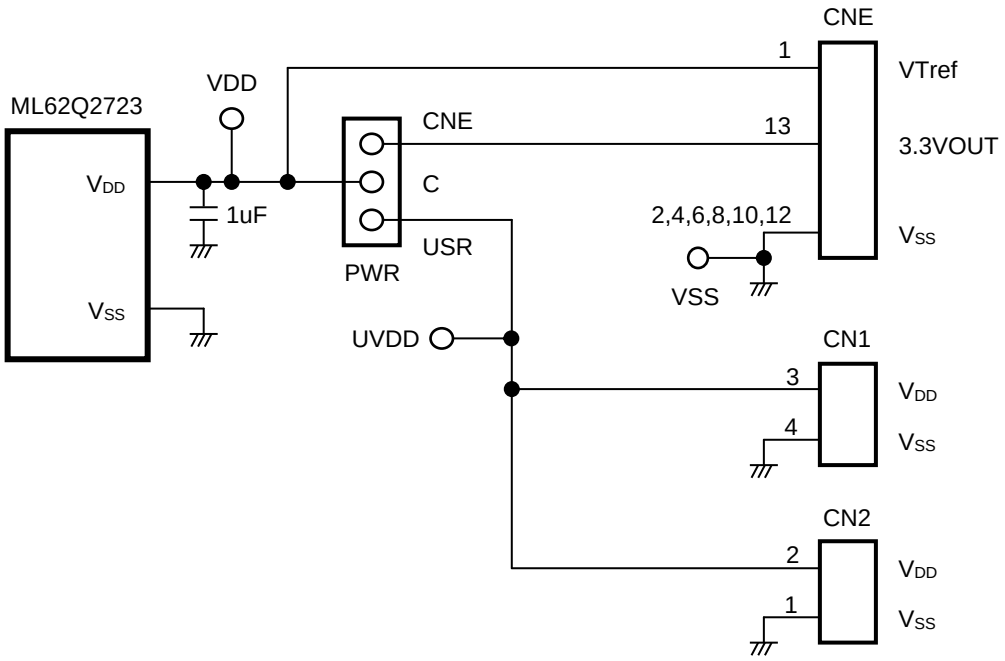

Fig. 2 Power Circuit

[Note]

The power supply ON/OFF procedure in case of setting PWR jumper to the USR-side when using EASE1000 V2.

- The procedure of power supply ON
  1. The USB cable of EASE1000 V2 is connected.
  2. The power supply of user's target system is turned on.

- The procedure of power supply OFF
  1. The power supply of user's target system is turned off
  2. The USB cable of EASE1000 V2 is removed

Downloaded from Arrow.com.

2.2. Connection for EASE1000 V2 (CNE)

EASE1000 V2 can be used if J1 and J2 jumper are set to "CNE".

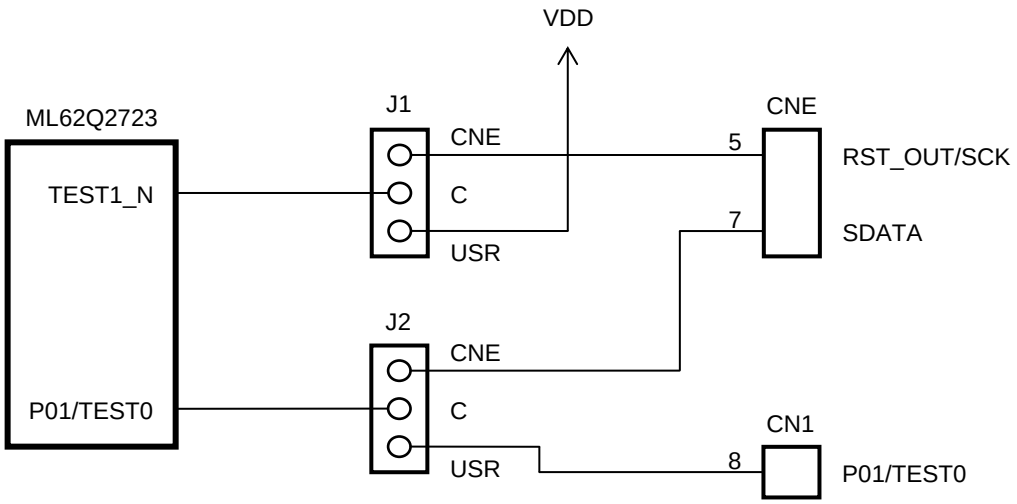

Fig. 3 EASE1000 V2 Interface

[Note]

P01/TEST0 pin:

P01/TEST0 pin of ML62Q2723 is initially set as a pull-up input mode

When using EASE1000 V2, do not set it as an output mode by using an application program, otherwise EASE1000 V2 cannot communicate with the ML62Q2723.

Downloaded from Arrow.com.

2.3. LED (P20, P21, P22)

The P20-P22 pins are ports that can directly drive LED. The Ports are connected to the LEDs through jumper-chip. Remove the jumper-chip when not using the LEDs.

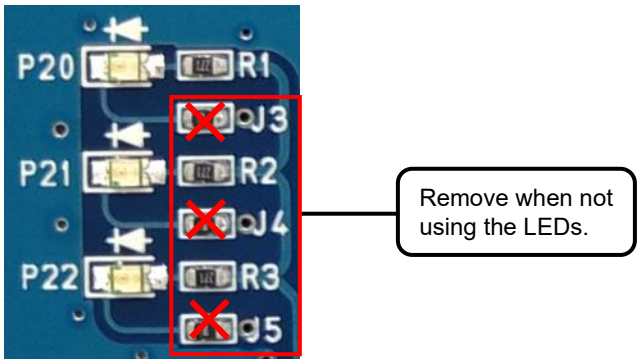

Fig. 4 Jumper-chip removal of LEDs

2.4. XT0/PIO0, XT1/PIO1

RB-D62Q2723GA64 can be mounted with cylinder type or SMD type crystal oscillator.

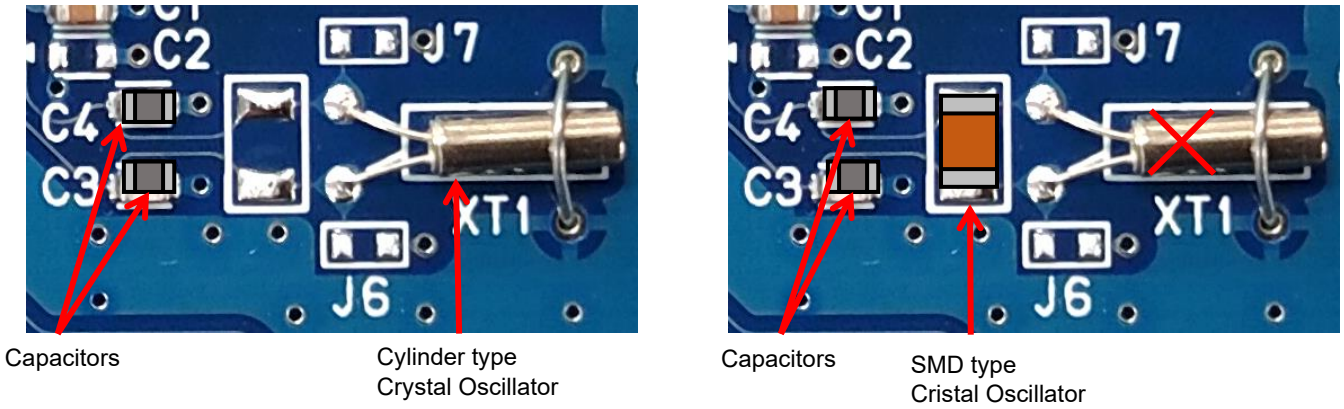

Fig. 5 Example of processing of Crystal Oscillator

Downloaded from Arrow.com.

2.5. P23, P24, P25, P26

When the P23 pin is used as VREF function of the successive approximation type A/D converter, C10, C11 can implement a bypass capacitor. In addition, VDD can be connected by mounting the J8 jumper-chip.
When P24, P25, P26 pin is used as AIN4, AIN5, AIN6 function of the successive approximation type A/D converter, the C12, C13 and C14 can implement a by-pass capacitor.
Fig. 6 shows the connection diagram.

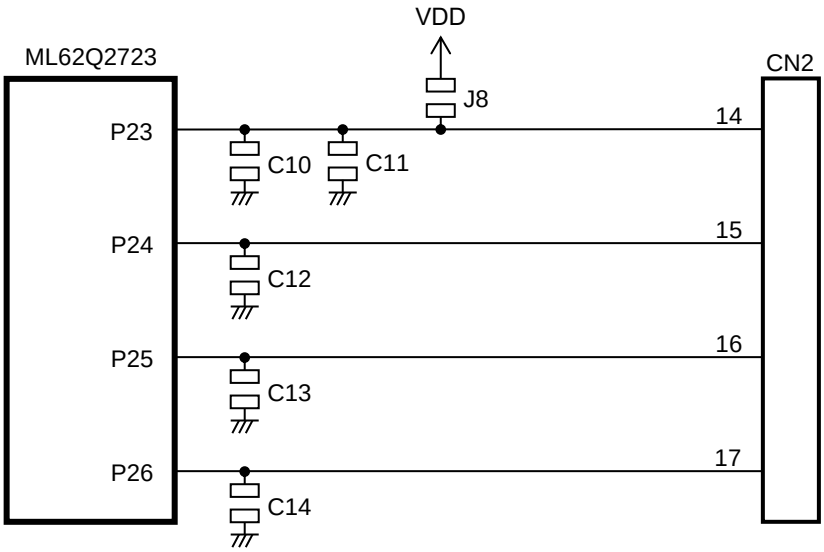

Fig. 6 P23, P24, P25, P26 Circuit

Downloaded from Arrow.com.

3. User Interface

3.1. CN1, CN2

Table 2 and Table 3 show the pin list of the RB-D62Q2723GA64 user interface connection CN1 and CN2.

Table 2 CN1 Pin List

CN1 Pin No.	Connection destination			CN1 Pin No.	Connection destination		
	Device	Pin No.	Name		Device	Pin No.	Name
1	J6	1	XT0	2	J7	1	XT1
3	PWR	USR	VDD	4	-	-	VSS
5	-	-	N.C.	6	ML62Q2723	6	RESET_N
7	-	-	N.C.	8	J2	USR	P01/TEST0
9	-	-	N.C.	10	-	-	N.C.
11	-	-	N.C.	12	-	-	N.C.
13	-	-	N.C.	14	-	-	N.C.
15	-	-	N.C.	16	-	-	N.C.
17	ML62Q2723	9	P44	18	ML62Q2723	10	P45
19	ML62Q2723	11	P02	20	ML62Q2723	12	P03
21	ML62Q2723	13	P46	22	ML62Q2723	14	P47
23	-	-	N.C.	24	-	-	N.C.
25	-	-	N.C.	26	-	-	N.C.
27	-	-	N.C.	28	-	-	N.C.
29	ML62Q2723	20	P70	30	ML62Q2723	21	P04
31	ML62Q2723	22	P05	32	ML62Q2723	23	P06
33	ML62Q2723	24	P07	34	ML62Q2723	25	P10
35	ML62Q2723	26	P11	36	ML62Q2723	27	P12
37	ML62Q2723	28	P13	38	ML62Q2723	29	P50
39	ML62Q2723	30	P51	40	ML62Q2723	31	P52
41	ML62Q2723	32	P53	42	-	-	N.C.
43	-	-	N.C.	44	-	-	N.C.
45	-	-	N.C.	46	-	-	N.C.
47	-	-	N.C.	48	-	-	N.C.
49	-	-	N.C.	50	-	-	N.C.

N.C. : Not Connected

Downloaded from Arrow.com.

Table 3 CN2 Pin List

CN2 Pin No.	Connection destination			CN2 Pin No.	Connection destination		
	Device	Pin No.	Name		Device	Pin No.	Name
1	-	-	VSS	2	PWR	USR	VDD
3	-	-	N.C.	4	-	-	N.C.
5	ML62Q2723	33	P54	6	ML62Q2723	34	P55
7	ML62Q2723	35	P14	8	ML62Q2723	36	P15
9	ML62Q2723	37	P16	10	ML62Q2723	38	P17
11	ML62Q2723	39	P20	12	ML62Q2723	40	P21
13	ML62Q2723	41	P22	14	ML62Q2723	42	P23
15	ML62Q2723	43	P24	16	ML62Q2723	44	P25
17	ML62Q2723	45	P26	18	ML62Q2723	46	P27
19	ML62Q2723	47	P56	20	ML62Q2723	48	P57
21	-	-	N.C.	22	-	-	N.C.
23	-	-	N.C.	24	-	-	N.C.
25	-	-	N.C.	26	-	-	N.C.
27	-	-	N.C.	28	-	-	N.C.
29	-	-	N.C.	30	-	-	N.C.
31	-	-	N.C.	32	ML62Q2723	49	P40
33	ML62Q2723	50	P41	34	ML62Q2723	51	P30
35	ML62Q2723	52	P31	36	ML62Q2723	53	P32
37	ML62Q2723	54	P33	38	ML62Q2723	55	P60
39	ML62Q2723	56	P61	40	ML62Q2723	57	P62
41	ML62Q2723	58	P63	42	ML62Q2723	59	P64
43	ML62Q2723	60	P65	44	ML62Q2723	61	P66
45	ML62Q2723	62	P67	46	ML62Q2723	63	P42
47	-	-	N.C.	48	-	-	N.C.
49	-	-	N.C.	50	ML62Q2723	64	P43

Downloaded from Arrow.com.

3.2. CNE

Table 4 shows the pin list of the RB-D62Q2723GA64 user interface connection CNE.

Table 4 CNE

CNE		Connection destination		
Pin No.	Name	Device	Pin No.	ML62Q2723 Pin Name
1	VTref	-	-	VDD
2	GND	-	-	VSS
3	VPP	-	-	N.C.
4	GND	-	-	VSS
5	RST_OUT/SCK	J1	CNE	TEST1_N
6	GND	-	-	VSS
7	SDATA	J2	CNE	P01/TEST0
8	GND	-	-	VSS
9	VDDL	-	-	N.C.
10	GND	-	-	VSS
11	N.C.	-	-	N.C.
12	GND	-	-	VSS
13	3.3VOUT	PWR	CNE	VDD
14	N.C.	-	-	N.C.

N.C. : Not Connected

Downloaded from Arrow.com.

4. Precaution for usage

(1) The RB-D62Q2723GA64 is an unfinished product and intended for research and development and for expert use in the research and development facility only. The RB-D62Q2723GA64 is not intended to be used for volume production or parts thereof.
(2) Since the content specified herein is subject to change for improvement without notice, confirm the latest content when using the board.
(3) See the other documents, the ML62Q2700 group user's manual and EASE1000 V2 user's manual when using the RB-D62Q2723GA64.
(4) Confirm the final electrical characteristics by using the mass production parts on your mass production boards.
(5) LAPIS supports replacing the board for an initial failure soon after the shipment. However LAPIS doesn't support reparing the board.
(6) RB-D62Q2723GA64 have signal patterns on the underside, it might work abnormally if using on conductive materials. Use it on insulating materials or having any preventable parts.

Downloaded from Arrow.com.

5. PCB specification, BOM list and Schematic

5.1. PCB specification

Fig. 7 shows the PCB dimensional outline diagram and layout of components.

PCB part number:
RB-D62Q2723GA64

Dimension:
55.88mm x 93.98mm

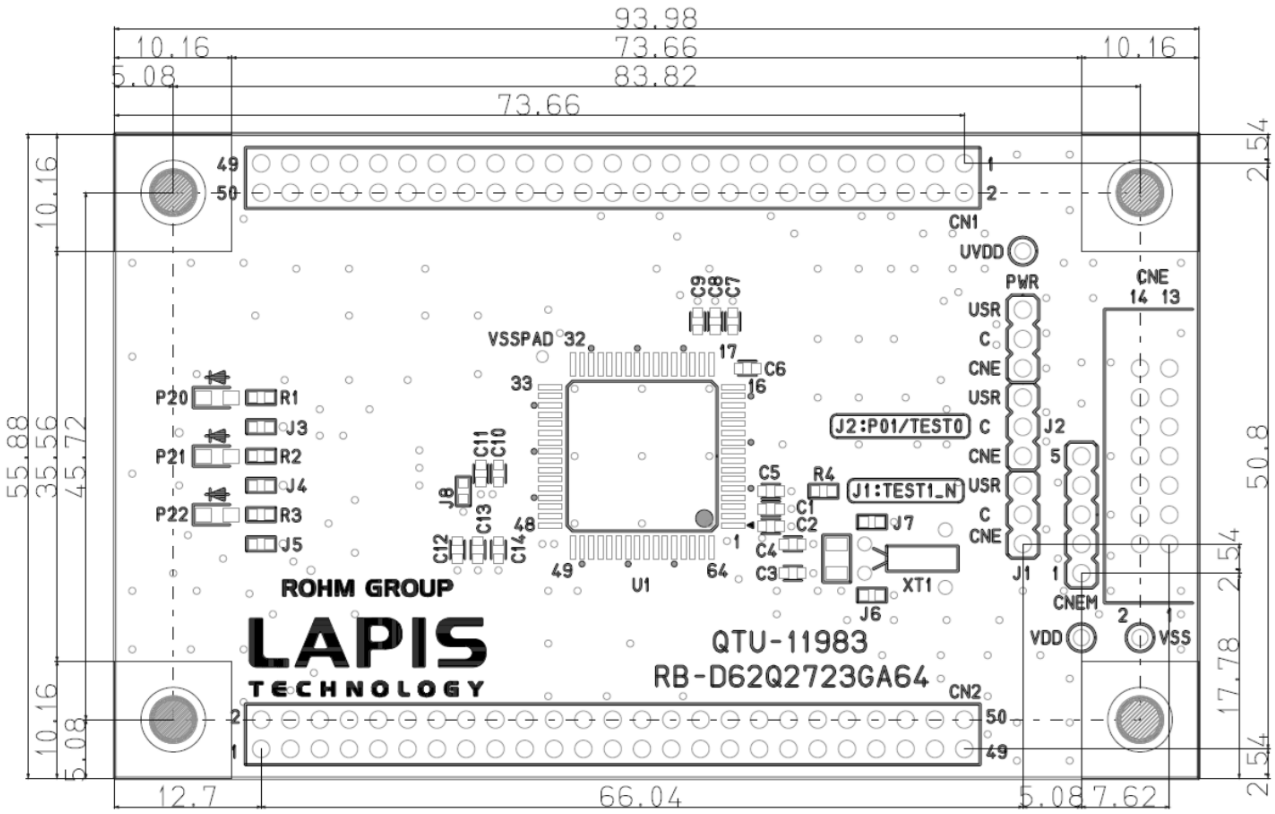

Fig. 7 PCB dimensional outline diagram and layout of components (Top view)

Downloaded from Arrow.com.

5.2. BOM list

Table 5 BOM list

	Parts Number	Symbol	Contents	Qty.	Vendor
1	QTU-11983	RB-D62Q2723GA64	PCB	1	LAPIS Technology Co., Ltd.
2	C1608X7R1E105K080AB	C1,C5,C6,C7,C8, C9	Ceramic Capacitor 1.0μF/25V X7R	6	TDK Corporation
3	-	C2,C10,C11,C12, C13,C14	Unmounted	6	-
4	GRM1885C1H220JA01	C3,C4	Ceramic Capacitor 22pF/50V C0G	2	Murata Manufacturing Co., Ltd.
5	HIF3H-50DA-2.54DSA(71)	CN1, CN2	Unmounted	2	Hirose Electric Co., Ltd.
6	HIF3FC-14PA-2.54DSA(71)	CNE	14pin Header Connector	1	Hirose Electric Co., Ltd.
7	-	CNEM	Unmounted	1	-
8	A2-3PA-2.54DSA	J1, J2, PWR	3pin Header Connector	3	Hirose Electric Co., Ltd.
9	MCR03ERTJ000	J3, J4, J5	Resistor 0Ω	3	Rohm Co., Ltd.
10	-	J6, J7, J8	Unmounted	3	-
11	SML-H12P8T	P20, P21, P22	LED Green	3	Rohm Co., Ltd.
12	MCR03EZPJ271	R1, R2, R3	Resistor 270Ω ±5%	3	Rohm Co., Ltd.
13	MCR03EZPJ103	R4	Resistor 10kΩ ±5%	1	Rohm Co., Ltd.
14	ML62Q2723-NNNGA	U1	16-bit Microcontroller	1	LAPIS Technology Co., Ltd.
15	-	UVDD, VDD, VSS	Unmounted	3	-
16	-	VSSPAD	Unmounted	1	-
17	VT-200-F 12.5pF	XT1	X'tal 32.768kHz 12.5pF	1	Seiko Instruments Inc.
18	HIF3GA-2.54SP	-	Short pin	3	Hirose Electric Co., Ltd.

[Note]
- The diameter of through hole of CN1 and CN2 is 1.0 mm.
  Using CN1 and CN2, the diameter of connector pin should use the connector below 0.6mm, such as 0.64mm.
- The parts may be changed into another parts with equivalent part special quality.

5.3. Schematic

The next page shows the schematic of RB-D62Q2723GA64.

Downloaded from Arrow.com.

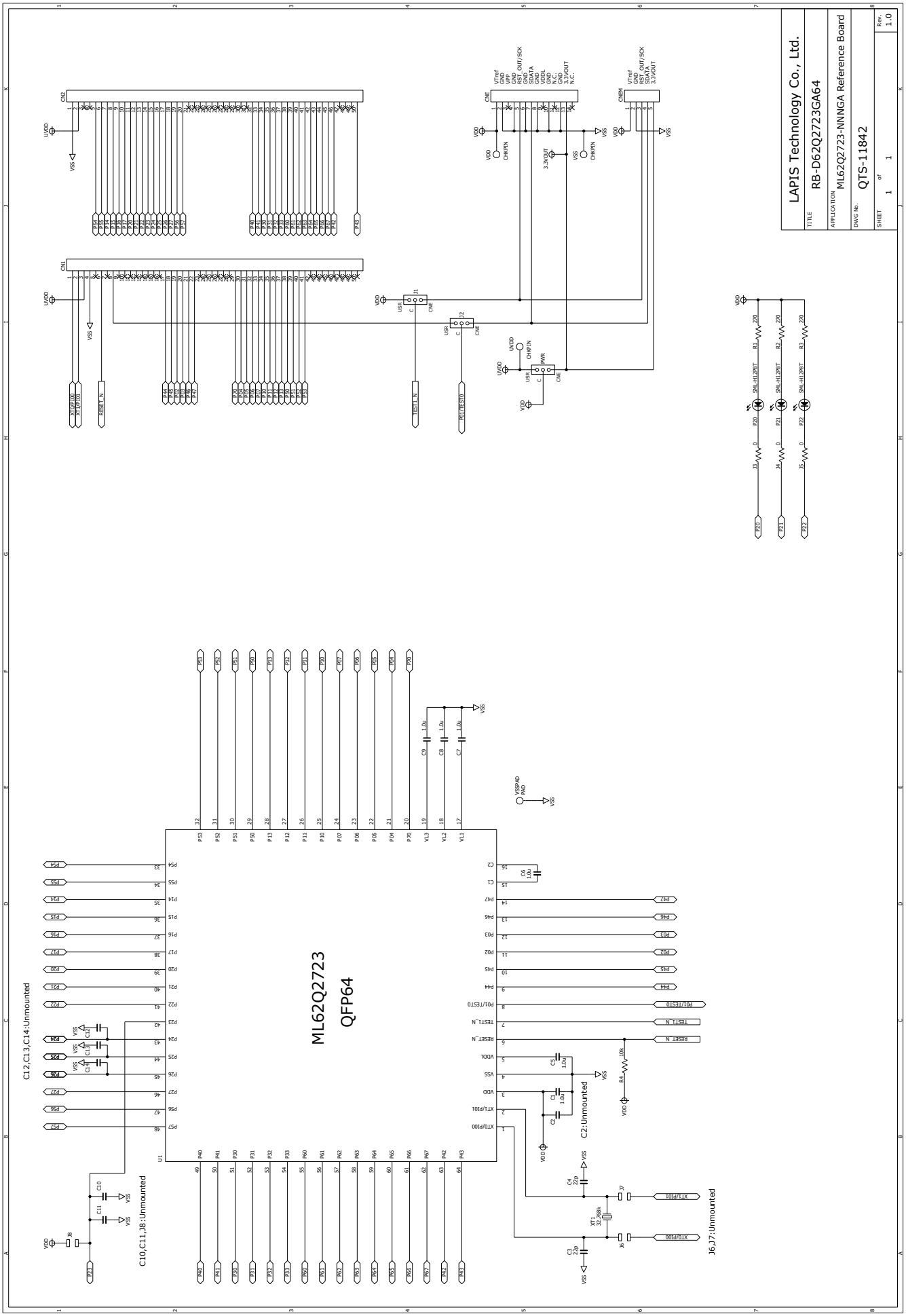

Downloaded from Arrow.com.

6. Revision History

Document No.	Issue Date	Page		Description
		Previous Edition	New Edition	
FEBL62Q2723RB-01	June 30, 2023	–	–	First edition.

Downloaded from Arrow.com.