THIS DRAWING IS UNPUBLISHED. RELEASED FOR PUBLICATION
© COPYRIGHT BY TYCO ELECTRONICS CORPORATION. ALL RIGHTS RESERVED.

LOC	DIST
DS	–

REVISIONS

P	LTR	DESCRIPTION	DATE	DWN	APVD
	A	RELEASED	12.JAN.'10	IS	HG

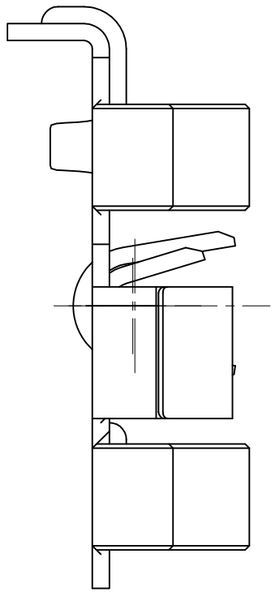

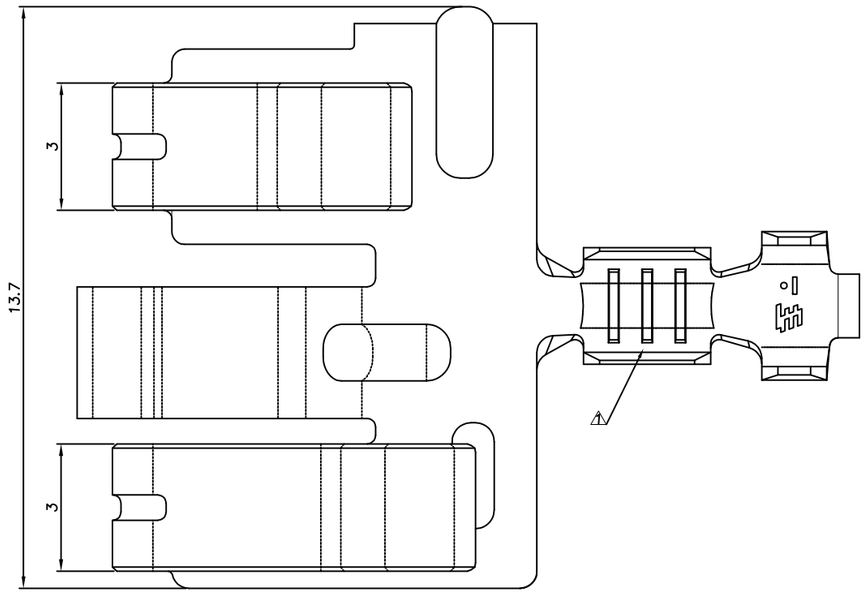

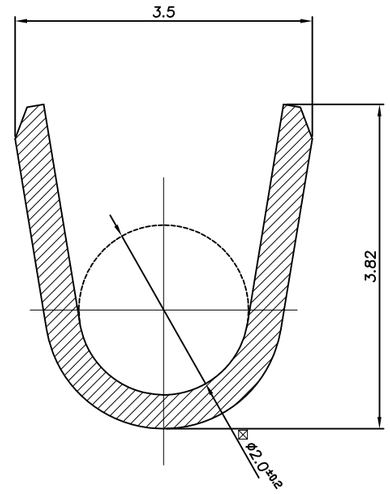

SECTION "C–C"
Scale 20/1

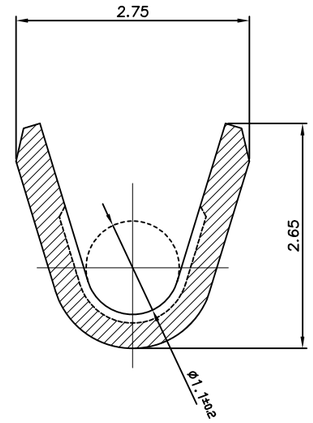

SECTION "D–D"
Scale 20/1

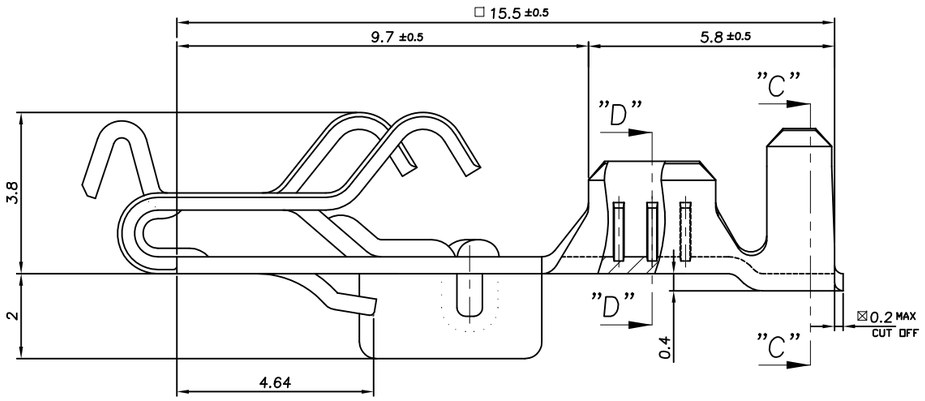

✱ NOTES

1. THREE SERRATIONS CENTERED IN WIRE BARREL.
2. WIRE SIZE EQUIV AVS 0.5~ AVS 0.85 Sqmm.

PRE–TINNED	Cu Alloy 0.40THK.	2005164–1
FINISH	MATERIAL	PART NUMBER

THIS DRAWING IS A CONTROLLED DOCUMENT FOR TYCO ELECTRONICS CORPORATION. IT IS SUBJECT TO CHANGE AND THE CONTROLLING ENGINEERING ORGANIZATION SHOULD BE CONTACTED FOR THE LATEST REVISION.

DIMENSIONS: MM

TOLERANCES UNLESS OTHERWISE SPECIFIED:
0 PLC ±
1 PLC ±
2 PLC ± ±0.3
3 PLC ±
4 PLC ±
ANGLES ± 2°

MATERIAL – –
FINISH – –

DWN IS WOO
CHK JV JUNG
APVD HG CHO
PRODUCT SPEC –
APPLICATION SPEC –
WEIGHT –

Tyco Electronics
AMP KOREA, kyungsan, korea

NAME GROUND TML FOR T-20 BULB ASS'Y

SIZE	CAGE CODE	DRAWING NO	RESTRICTED TO
A2	00779	C-2005164	–

CUSTOMER DRAWING | SCALE 10/1 | SHEET 1 OF 1 | REV A

AMP 1471-9 REV 31MAR2000

Downloaded from Arrow.com.