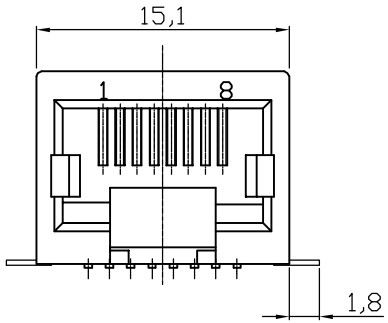

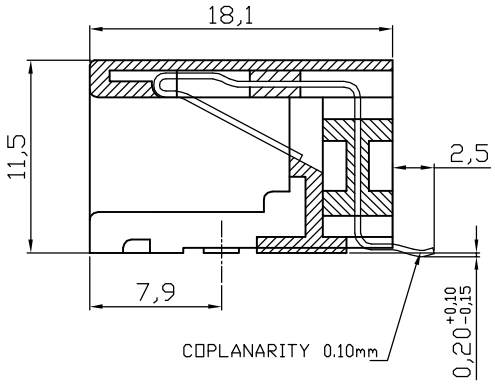

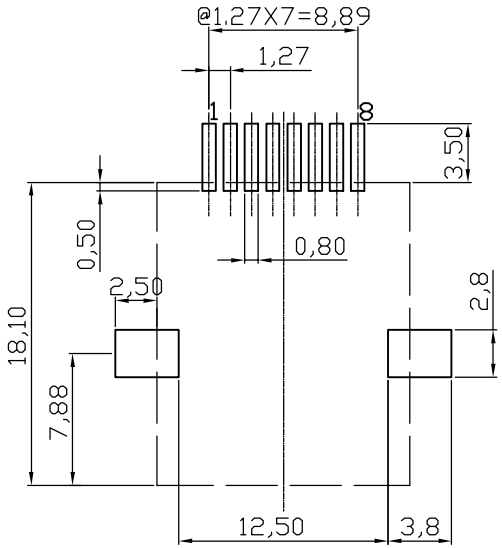

PC BOARD LAYOUT
COMPONENT SIDE SHOWN

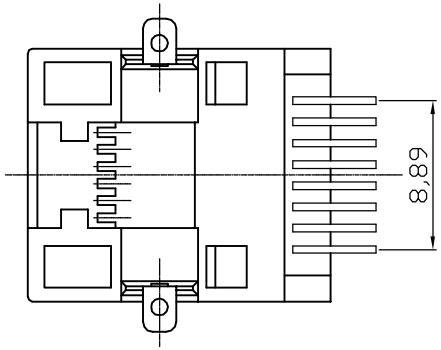

NOTES:

ELECTRICAL:

1. VOLTAGE RATING	: 125 VAC.
2. CURRENT RATING	: 1.5 AMP.
3. CONTACT RESISTANCE	: 35 MILLIOHMS MAX.
4. INSULATION RESISTANCE	: 1000 MEGOHMS MIN. @ 500 VDC.
5. DIELECTRIC STRENGTH	: 1000 VAC 60Hz, 1MIN.

MECHANICAL:

1. HOUSING MATERIAL	: PA9T UL94V-0, BLACK.
2. CONTACT MATERIAL	: PHOSPHOR BRONZE t=0.35mm.
3. PLATING	: 6µ" GOLD PLATING OVER NICKEL.
4. OPERATING LIFE	: 750 CYCLES MIN.
5. PCB RETENTION POST-SOLDER	: 10 LBS MIN.

ENVIRONMENTAL:

1. STORAGE	: -40°C TO +85°C.
2. OPERATION TEMPERATURE	: -40°C TO +85°C.

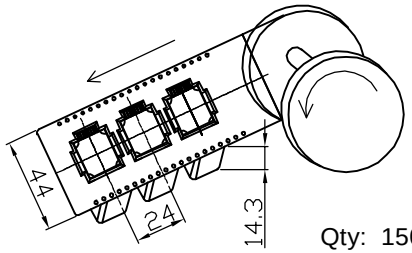

Qty: 150 PCS per Reel
②

RoHS compliant

Unit: mm

File No.: E345352

Scale	1:1
TOLERANCE	
.X	±0.20
.XX	±0.15
.XXX	±0.10
DIM	TOL
Angle	±5°

Id.	Modification	Date	Name
②	Changed the packing quantity	29.10.2010	Rale
①	Drawn	15.07.2009	Dean

	Date	Name
Drawn	15.07.2009	Dean
Approved	29.10.2010	Hellwig

ASSMANN WSW components

Customer-No.

ASSMANN WSW-No.
A-20042-LP/SMT-A

Drawing-No.
ASS 1050C CO

rev02

Replace

SHEET

P90

Downloaded from Arrow.com.