Overview

The KEMET PEG226 is an electrolytic capacitor with an outstanding electrical performance. The device has a polarized all-welded design, tinned copper wire leads, and a negative pole connected to the case. The PEG226 winding is housed in a cylindrical aluminum can, with a high purity aluminum lid and a high quality rubber gasket. The low ESR is the result of a low resistive electrolyte/paper system and an all-welded design. Thanks to its mechanical robustness, the PEG226 is suitable for use in mobile and aircraft installations, with operation up to +150°C. KEMET's automotive grade capacitors meet the demanding Automotive Electronics Council's AEC–Q200 qualification requirements.

Applications

The KEMET PEG226 is a new generation of high performance axial electrolytic capacitors. It is designed for automotive applications with extremely high demands.

Benefits

- AEC–Q200 automotive qualified
- 2,000 hours at +150°C
- Extremely high ripple current
- Up to 28 ARMS ripple current, continuous load
- High vibration resistance
- Polarized all-welded design
- Outstanding electrical performance

Part Number System

PEG226	H	F	415	0	M	E4
Series	Rated Voltage (VDC)	Size Code	Capacitance Code (µF)	Version	Capacitance Tolerance	Packaging
Axial Aluminum Electrolytic	H = 25 K = 40 M = 63 N = 80	See Dimension Table	The last two digits represent significant figures. The first digit indicates the total number digits.	0 = Standard	Q = −10/+30% M = ±20%	E4 = Tray

Downloaded from Arrow.com.

Performance Characteristics

Item	Performance Characteristics		
Capacitance Range	250 – 4,700 µF		
Rated Voltage	25 – 80 VDC		
Operating Temperature	–40 to +150°C		
Capacitance Tolerance	–10/+30%, (±20% select values) at 100 Hz/+20°C		
Operational Lifetime	D (mm)	Rated voltage, +125°C (hours)	Rated voltage, +150°C (hours)
	16	6,300	1,500
	18 and 20	8,400	2,000
Shelf Life	5,000 hours at +105°C or 10 years at +40°C 0 VDC		
Leakage Current	I = 0.003 CV + 4.0 (µA)		
	C = rated capacitance (µF), V = rated voltage (VDC). Voltage applied for 5 minutes at +20°C.		
Vibration Test Specifications	Procedure		Requirements
	1.5 mm displacement amplitude or 20 g maximum acceleration. Vibration applied for three 22-hour sessions at 10 – 2,000 Hz (capacitor clamped by body).		No leakage of electrolyte or other visible damage. Deviations in capacitance from initial measurements must not exceed: Δ C/C < 5%
Standards	IEC 60384–4 long life grade 40/125/56, AEC–Q200		

Compensation Factor of Ripple Current (RC) vs. Frequency

Frequency	100 Hz	300 Hz	1 kHz	5 kHz	100 kHz
Coefficient	0.35	0.57	0.80	1.00	1.04

Test Method & Performance

Endurance Life Test	
Conditions	Performance
Temperature	+150°C
Test Duration	1,500 hours (D = 16 mm)
	2,000 hours (D = 18 and 20 mm)
Ripple Current	Maximum ripple current specified in table
Voltage	The sum of DC voltage and the peak AC voltage must not exceed the rated voltage of the capacitor
Performance	**The following specifications will be satisfied when the capacitor is tested at +20°C:**
Capacitance Change	Within 15% of the initial value
Equivalent Series Resistance	Does not exceed 200% of the initial value
Leakage Current	Does not exceed leakage current limit

Downloaded from Arrow.com.

Ordering Options Table

Packaging Kind	Lead Length (mm)	Lead and Packaging Code
Standard Packaging Option		
Bulk (box)	40 ±2	E1 - Obsolete
Tray	40 ±2	E4

Dimensions – Millimeters

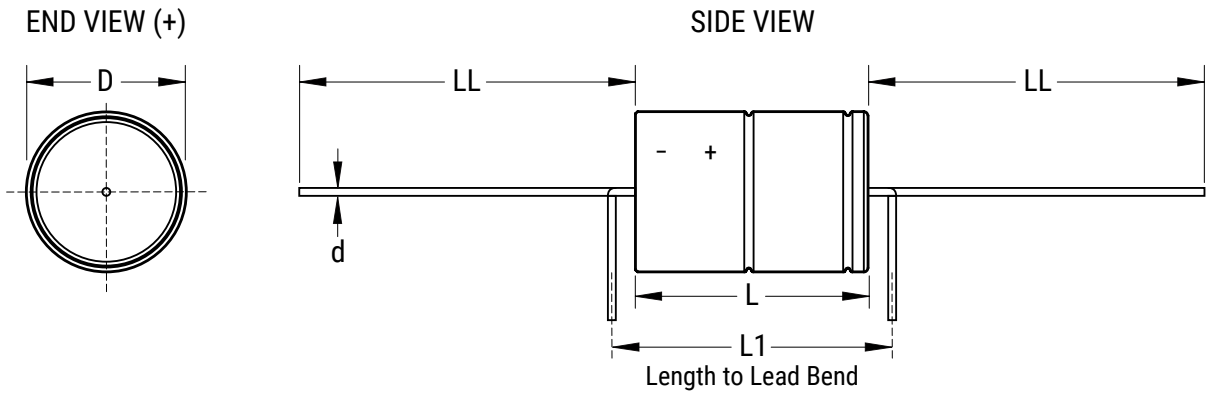

Size Code	Dimensions in mm					Approximate Weight Grams
	D	L	L1	d	LL	
	±0.5	±1	Minimum	±0.03	b ±2 Box	
F	16.2	26.7	33	1.0	40	8
G	16.2	34.7	41	1.0	40	11
M	18.2	26.7	33	1.0	40	11
N	18.2	34.7	41	1.0	40	14
V	18.2	38.7	45	1.0	40	16
H	20.2	26.7	33	1.0	40	13
J	20.2	34.7	41	1.0	40	20
L	20.2	42.7	49	1.0	40	24

Note: L1 is KEMET's recommendation for minimum distance between symmetrical lead bend. Available only for customer specific part numbers. Lead bend dimensions must be specified and confirmed per article.

Downloaded from Arrow.com.

Shelf Life

The capacitance, ESR and impedance of a capacitor will not change significantly after extended storage periods, however, the leakage current will very slowly increase. KEMET products are particularly stable and allow a shelf life in excess of ten years at 40°C. See sectional specification under each product for specific data.

Failure Rate

Estimated field failure rate: ≤ 0.15 ppm (failures per year/produced number of capacitors per year).
The expected failure rate for this capacitor range is based on field experience for capacitors with structural similarity.

Environmental Compliance

All Part Numbers in this datasheet are Reach and RoHS compliant and Halogen-Free.

As an environmentally conscious company, KEMET is working continuously with improvements concerning the environmental effects of both our capacitors and their production.

In Europe (RoHS Directive) and in some other geographical areas such as China, legislation has been put in place to prevent the use of some hazardous materials, such as lead (Pb), in electronic equipment. All products in this catalog are produced to help our customers' obligations to guarantee their products and fulfill these legislative requirements. The only material of concern in our products has been lead (Pb), which has been removed from all designs to fulfill the requirement of containing less than 0.1% of lead in any homogeneous material. KEMET will closely follow any changes in legislation worldwide and make any necessary changes in its products, whenever needed.

Some customer segments such as medical, military and automotive electronics may still require the use of lead in electrode coatings. To clarify the situation and distinguish products from each other, a special symbol is used on the packaging labels for RoHS compatible capacitors.

Due to customer requirements, there may appear additional markings such as lead-free (LF), or lead-free wires (LFW) on the label.

Downloaded from Arrow.com.

Table 1 – Ratings & Part Number Reference

VDC	Rated Capacitance	Size Code	Case Size	Ripple Current					ESR Maximum			Part Number
				Maximum			Rated	Maximum				
	100 Hz 20°C (µF)		D x L (mm)	≥ 5 kHz 125°C (A)[1]	≥ 5 kHz 140°C (A)[1]	≥ 5 kHz 150°C (A)[1]	≥ 5 kHz 125°C (A)[2]	≥ 5 kHz 125°C (A)[3]	100 Hz 20°C (mΩ)	100 kHz 20°C (mΩ)	5 – 100 kHz 125 – 150°C (mΩ)	
25	1500	F	16 x 27	16.8	10.6	4.7	5.9	7.4	72	36	12.7	PEG226HF4150ME4
25	2200	G	16 x 35	19.2	12.1	5.4	7.2	9.1	51	26	9.7	PEG226HG4220ME4
25	2000	M	18 x 27	18.8	11.9	5.3	6.5	8.3	53	26	11.0	PEG226HM4200QE4
25	3000	N	18 x 35	21.2	13.4	6.0	7.9	10.0	37	19	8.7	PEG226HN4300QE4
25	3400	V	18 x 39	22.0	13.9	6.2	8.3	10.5	33	17	8.1	PEG226HV4340QE4
25	2200	H	20 x 27	22.2	14.0	6.3	7.1	9.1	50	25	10.6	PEG226HH4220QE4
25	3300	J	20 x 35	25.8	16.3	7.3	8.9	11.3	34	17	7.8	PEG226HJ4330QE4
25	4700	L	20 x 43	28.5	18.0	8.1	10.3	13.1	25	13	6.4	PEG226HL4470QE4
40	800	F	16 x 27	16.2	10.2	4.6	5.6	7.2	100	36	13.6	PEG226KF3800QE4
40	1200	G	16 x 35	18.6	11.8	5.3	7.0	8.8	69	26	10.3	PEG226KG4120QE4
40	1200	M	18 x 27	18.3	11.6	5.2	6.3	8.0	70	27	11.7	PEG226KM4120QE4
40	1800	N	18 x 35	20.5	13.0	5.8	7.6	9.6	49	20	9.3	PEG226KN4180QE4
40	2000	V	18 x 39	21.4	13.6	6.1	8.1	10.3	43	17	8.5	PEG226KV4200QE4
40	1500	H	20 x 27	22.8	14.4	6.5	7.3	9.3	57	22	10.0	PEG226KH4150QE4
40	2200	J	20 x 35	25.7	16.2	7.3	8.9	11.2	41	17	7.9	PEG226KJ4220QE4
40	2700	L	20 x 43	27.9	17.6	7.9	10.1	12.8	32	13	6.7	PEG226KL4270QE4
63	250	F	16 x 27	11.5	7.3	3.3	4.0	5.1	227	53	26.9	PEG226MF3250QE4
63	370	G	16 x 35	13.6	8.6	3.9	5.1	6.4	155	37	19.2	PEG226MG3370QE4
63	380	M	18 x 27	14.0	8.9	4.0	4.9	6.1	151	36	19.9	PEG226MM3380QE4
63	560	N	18 x 35	16.2	10.2	4.6	6.0	7.6	104	26	14.9	PEG226MN3560QE4
63	640	V	18 x 39	17.1	10.8	4.8	6.5	8.2	91	23	13.3	PEG226MV3640QE4
63	470	H	20 x 27	17.3	10.9	4.9	5.5	7.0	125	32	17.5	PEG226MH3470QE4
63	680	J	20 x 35	20.0	12.7	5.7	6.9	8.7	87	23	13.0	PEG226MJ3680QE4
63	900	L	20 x 43	22.2	14.0	6.3	8.1	10.2	67	18	10.6	PEG226ML3900QE4
80	250	F	16 x 27	9.9	6.3	2.8	3.4	4.4	279	105	36.3	PEG226NF3250QE4
80	370	G	16 x 35	12.0	7.6	3.4	4.4	5.7	190	72	25.0	PEG226NG3370QE4
80	380	M	18 x 27	12.2	7.7	3.4	4.3	5.5	187	72	26.3	PEG226NM3380QE4
80	560	N	18 x 35	14.3	9.0	4.0	5.4	6.9	128	50	19.2	PEG226NN3560QE4
80	640	V	18 x 39	15.0	9.5	4.2	5.9	7.5	113	45	17.4	PEG226NV3640QE4
80	470	H	20 x 27	15.4	9.8	4.4	4.9	6.4	152	60	21.9	PEG226NH3470QE4
80	680	J	20 x 35	18.1	11.4	5.1	6.3	8.0	106	42	15.9	PEG226NJ3680QE4
80	900	L	20 x 43	20.3	12.8	5.7	7.4	9.4	81	32	12.7	PEG226NL3900QE4
VDC	Rated Capacitance	Size Code	Case Size	Ripple Current					ESR			Part Number

[1] Capacitor-mounted with low thermal resistance path (heat-sink).
[2] Rated ripple current, continues operation at natural convection (Ø20 and Ø18 case 4000h, Ø16 case 3000h)
[3] Max ripple current, at natural convection (Ø20 and Ø18 case 2000h, Ø16 case 1500h)

Downloaded from Arrow.com.

Marking

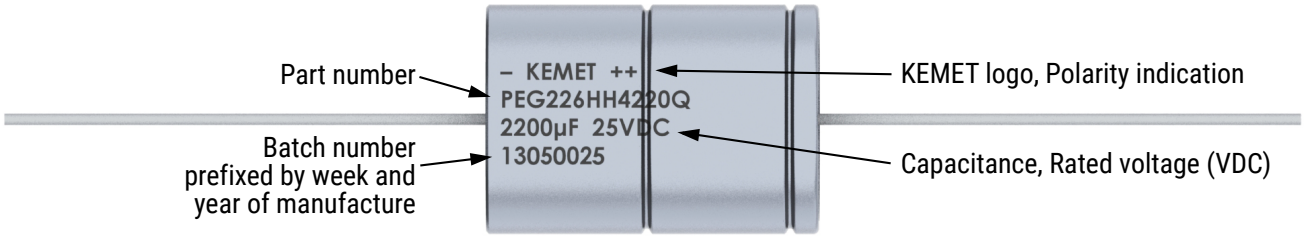

Construction

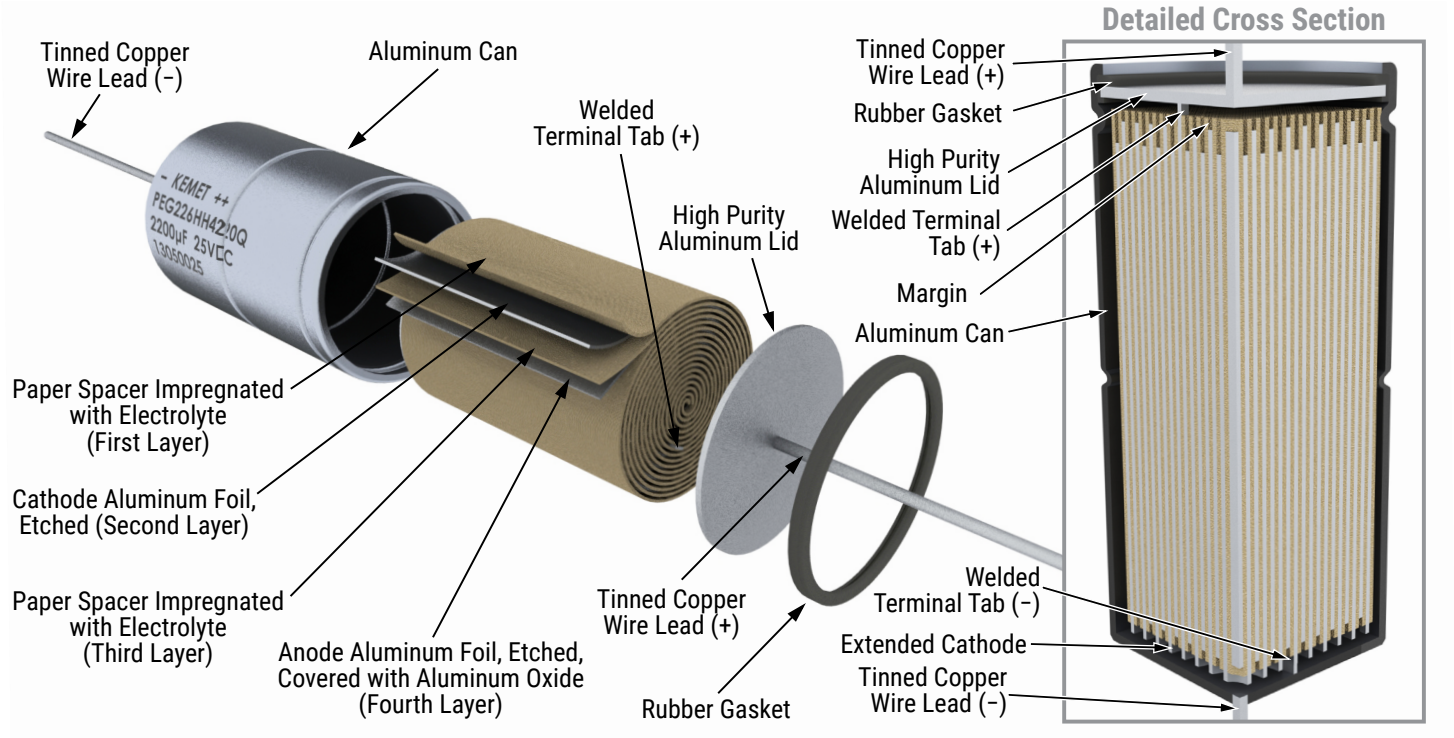

Downloaded from Arrow.com.

Construction Data

The manufacturing process begins with the anode foil being electrochemically etched to increase the surface area and then "formed" to produce the aluminum oxide layer. Both the anode and cathode foils are then interleaved with absorbent paper and wound into a cylinder. During the winding process, aluminum tabs are attached to each foil to provide the electrical contact.

The winding is assembled to the capacitor Al-can and to the Al-lid. The can is filled with electrolyte and the winding is impregnated during a vacuum treatment. The capacitor is sealed. Throughout the process, all materials inside the housing must be maintained at the highest purity and be compatible with the electrolyte.

Each capacitor is aged and tested before being packed. The purpose of aging is to repair any damage in the oxide layer and thus reduce the leakage current to a very low level. Aging is carried out at elevated temperature and is accomplished by applying voltage to the device while carefully controlling the supply current. The process takes between 2 and 20 hours, depending on voltage rating.

Damage to the oxide layer can occur due to a variety of reasons:

- Slitting of the anode foil after forming
- Attaching the tabs to the anode foil
- Minor mechanical damage caused during winding

The following tests are applied for each individual capacitor.

Electrical:

- Leakage current
- Capacitance
- ESR
- Tan Delta

Mechanical/Visual:

- Pull strength test of wire terminals
- Print detail
- Box labels
- Packaging, including packed quantity

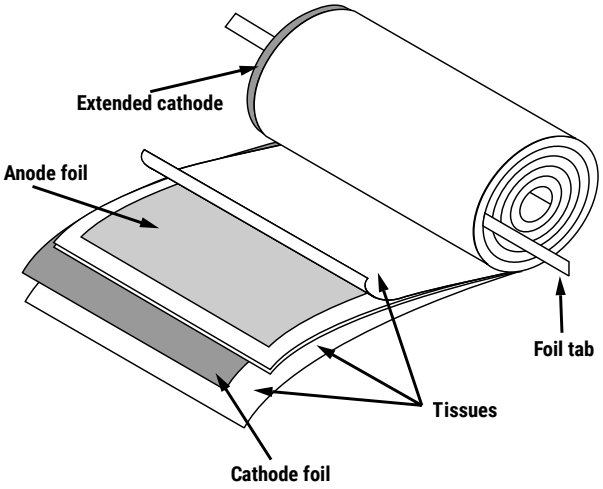

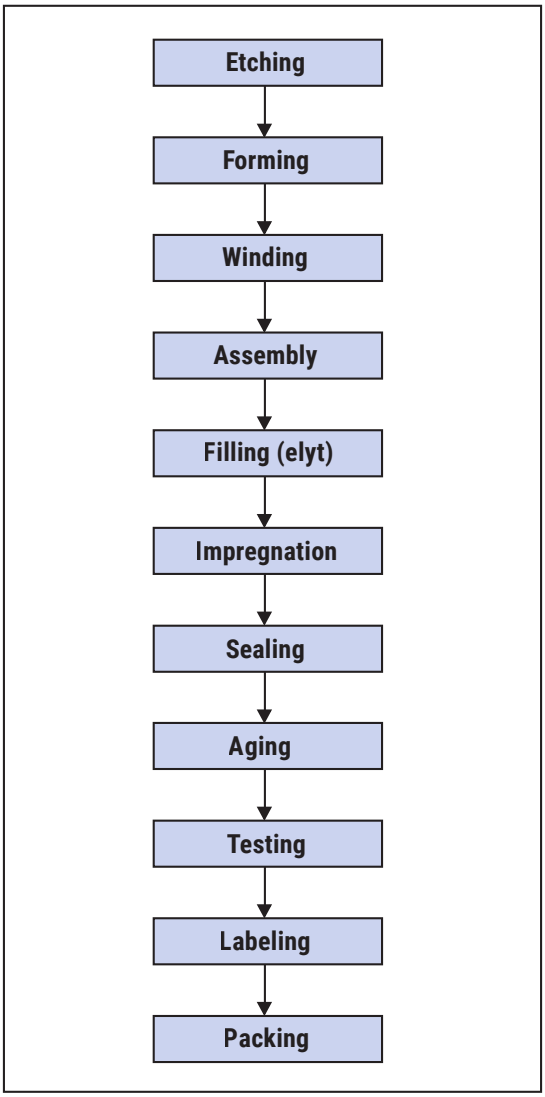

Downloaded from Arrow.com.

KEMET Electronics Corporation Sales Offices

For a complete list of our global sales offices, please visit https://www.yageogroup.com/SalesResources/SalesOffices

Disclaimer

YAGEO Corporation and its affiliates do not recommend the use of commercial or automotive grade products for high reliability applications or manned space flight.

All product specifications, statements, information and data (collectively, the "Information") in this datasheet are subject to change. The customer is responsible for checking and verifying the extent to which the Information contained in this publication is applicable to an order at the time the order is placed. All Information given herein is believed to be accurate and reliable, but it is presented without guarantee, warranty, or responsibility of any kind, expressed or implied.

Statements of suitability for certain applications are based on KEMET Electronics Corporation's ("KEMET") knowledge of typical operating conditions for such applications, but are not intended to constitute – and KEMET specifically disclaims – any warranty concerning suitability for a specific customer application or use. The Information is intended for use only by customers who have the requisite experience and capability to determine the correct products for their application. Any technical advice inferred from this Information or otherwise provided by KEMET with reference to the use of KEMET's products is given gratis, and KEMET assumes no obligation or liability for the advice given or results obtained.

Although KEMET designs and manufactures its products to the most stringent quality and safety standards, given the current state of the art, isolated component failures may still occur. Accordingly, customer applications which require a high degree of reliability or safety should employ suitable designs or other safeguards (such as installation of protective circuitry or redundancies) in order to ensure that the failure of an electrical component does not result in a risk of personal injury or property damage.

Although all product–related warnings, cautions and notes must be observed, the customer should not assume that all safety measures are indicated or that other measures may not be required.

KEMET requires its products to be packaged and shipped on pallets. This is because KEMET's products are specifically designed to be packed onto pallets during shipment. If for any reason, the products are removed from pallets by the shipping party and shipped to the end customer, then additional external protection is required. In this instance, an external box with two carton layers and an upwards orientation sticker must be used by the shipping party, with the empty space filled with filling material, and afterwards sealing the box. If this packing and packaging guideline is not followed by the shipping party, the shipping party, and not KEMET, will be held responsible for any packaging, packing and/or product damages upon delivery of the products to the end customer. KEMET hereby disclaims any liability for damages to the products or otherwise that have been, or threaten to be, inflicted, result from or are in any way related to the packaging, packing or damage by the shipping party in contravention of the packing and packaging guidelines herein.

KEMET is a registered trademark of KEMET Electronics Corporation.

Downloaded from Arrow.com.