Metallized Polypropylene Film EMI Suppression Capacitors

R41T, THB, Class X1/Y2, 300 VAC, 125°C (Automotive Grade)

Overview

The R41T is constructed of metallized polypropylene film encapsulated with self-extinguishing resin, in a box of material meeting the requirements of UL 94 V–0.

Automotive Grade devices meet the demanding Automotive Electronics Council's AEC–Q200 qualification requirements.

Applications

For use in electromagnetic interference (EMI) suppression filter in "line-to-ground" and "across-the-line" applications, requiring Y2/X1 safety classification. Suitable for use in situations where failure of the capacitor could lead to danger of electric shock.

Benefits

- Approvals: ENEC, UL, cUL, CQC
- Class X1/Y2 (IEC 60384-14)
- THB Grade IIIB: 85°C, 85% RH, 1,000 hours at 300 V URAC acc. to IEC 60384-14, for details see Environmental Test Data
- Rated voltage: 300 VAC 50/60 Hz
- Capacitance range: 0.001 µF – 1 µF
- Lead spacing: 7.5 – 37.5 mm
- Capacitance tolerance: ±20%, ±10%
- Climatic category 40/110/56, IEC 60068-1
- Tape and reel in accordance with IEC 60286-2
- RoHS compliant and lead-free terminations
- Operating temperature range of −40°C to +125°C
- Self-healing properties
- Automotive (AEC–Q200) grade

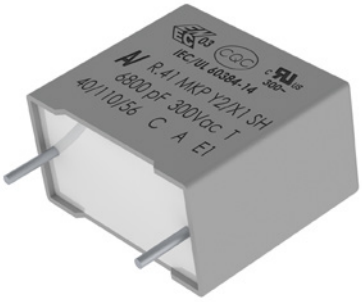

Part Number System

R41	3	I	2330	00	T0	M
Series	Rated Voltage (VAC)	Lead Spacing (mm)	Capacitance Code (pF)	Packaging	Internal Use	Capacitance Tolerance
Y2, Metallized Polypropylene	3 = 300	D = 7.5 F = 10.0 I = 15.0 N = 22.5 R = 27.5 W = 37.5	The last three digits represent significant figures. The first digit specifies number of zeros to be added.	See Ordering Options Table	T0 T1	K = ±10% M = ±20%

© KEMET Electronics Corporation • One East Broward Boulevard
Fort Lauderdale, FL 33301 USA • 954-766-2800 • www.kemet.com

Downloaded from Arrow.com.

Ordering Options Table

Lead Spacing Nominal (mm)	Type of Leads and Packaging	Lead Length (mm)	Lead and Packaging Code
7.5	**Standard Lead and Packaging Options**		
	Bulk (Bag) – Short Leads	4 +2/−0	00
	Ammo Pack	H_0= 18.5 ±0.5	DQ
	Other Lead and Packaging Options		
	Tape & Reel (Standard Reel Ø 355 mm)	H_0 = 18.5±0.5	CK
	Bulk (Bag) – Short Leads	2.7 +0.5/−0	JA
	Bulk (Bag) – Short Leads	3.5 +0.5/−0	JB
	Bulk (Bag) – Short Leads	4.0 +0.5/−0	JE
	Bulk (Bag) – Short Leads	3.2 +0.3/−0.2	JH
	Bulk (Bag) – Long Leads	18 ±1	JM
10 15 22.5	**Standard Lead and Packaging Options**		
	Bulk (Bag) – Short Leads	4 +2/−0	00
	Ammo Pack	H_0= 18.5 ±0.5	DQ
	Other Lead and Packaging Options		
	Tape & Reel (Large Reel)	H_0= 18.5 ±0.5	CK
	Tape & Reel (Standard Reel)	H_0= 18.5 ±0.5	GY
	Bulk (Bag)[2] – Short Leads	3.5 +0.5/−0	JB
	Bulk (Bag)[2] – Short Leads	4.0 +0.5/−0	JE
	Bulk (Bag) [2] – Short Leads	3.2 +0.3/−0.2	JH
	Bulk (Bag) – Long Leads	18 ±1	JM
	Bulk (Bag) – Long Leads	30 +5/−0	40
	Bulk (Bag) – Long Leads	25 +2/−1	50
27.5	**Standard Lead and Packaging Options**		
	Bulk (Tray) – Short Leads	4 +2/−0	00
	Tape & Reel (Large Reel)	H_0= 18.5 ±0.5	CK[1]
	Other Lead and Packaging Options		
	Bulk (Tray) – Long Leads	30 +5/−0	40
	Bulk (Tray) – Long Leads	25 +2/−1	50
37.5	**Standard Lead and Packaging Options**		
	Bulk (Tray) – Short Leads	4 +2/−0	00
	Other Lead and Packaging Options		
	Bulk (Tray) – Long Leads	30 +5/−0	40
	Bulk (Tray) – Long Leads	25 +2/−1	50

[1] *Not for all sizes, see "Packaging Quantities" table*
[2] *For lead spacing 22.5 case sizes ≥ 8.5*17*26.5 the parts are packed in a Pizza box 335*320*34 mm*

Downloaded from Arrow.com.

Dimensions – Millimeters

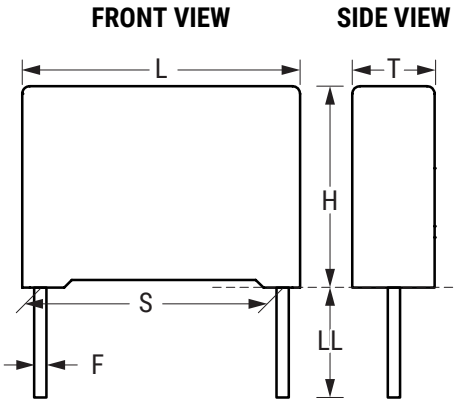

S		T		H		L		F	
Nominal	Tolerance	Nominal	Tolerance	Nominal	Tolerance	Nominal	Tolerance	Nominal	Tolerance
7.5	±0.4	4	+0.1/−0.5	9	+0.1/−0.5	10	+0.2/−0.5	0.6	±0.05
7.5	±0.4	5	+0.1/−0.5	10.5	+0.1/−0.5	10	+0.2/−0.5	0.6	±0.05
7.5	±0.4	6	+0.1/−0.5	12	+0.1/−0.5	10.5	+0.2/−0.5	0.6	±0.05
10.0	±0.4	4.0	+0.2/−0.5	9.0	+0.1/−0.5	13.0	+0.3/−0.5	0.6	±0.05
10.0	±0.4	5.0	+0.2/−0.5	11.0	+0.1/−0.5	13.0	+0.3/−0.5	0.6	±0.05
10.0	±0.4	6.0	+0.2/−0.5	12.0	+0.1/−0.5	13.0	+0.3/−0.5	0.6	±0.05
15.0	±0.4	5.0	+0.2/−0.5	11.0	+0.1/−0.5	18.0	+0.3/−0.5	0.6	±0.05
15.0	±0.4	6.0	+0.2/−0.5	12.0	+0.1/−0.5	18.0	+0.3/−0.5	0.6	±0.05
15.0	±0.4	7.5	+0.2/−0.5	13.5	+0.1/−0.5	18.0	+0.3/−0.5	0.6	±0.05
15.0	±0.4	8.5	+0.2/−0.5	14.5	+0.1/−0.5	18.0	+0.3/−0.5	0.6	±0.05
15.0	±0.4	10.0	+0.2/−0.5	16.0	+0.1/−0.5	18.0	+0.3/−0.5	0.8	±0.05
15.0	±0.4	11.0	+0.2/−0.5	19.0	+0.1/−0.5	18.0	+0.3/−0.5	0.8	±0.05
22.5	±0.4	6.0	+0.2/−0.5	15.0	+0.1/−0.5	26.5	+0.3/−0.5	0.8	±0.05
22.5	±0.4	7.0	+0.2/−0.5	16.0	+0.1/−0.5	26.5	+0.3/−0.5	0.8	±0.05
22.5	±0.4	8.5	+0.2/−0.5	17.0	+0.1/−0.5	26.5	+0.3/−0.5	0.8	±0.05
22.5	±0.4	10.0	+0.2/−0.5	18.5	+0.1/−0.5	26.5	+0.3/−0.5	0.8	±0.05
22.5	±0.4	11.0	+0.2/−0.5	20.0	+0.1/−0.5	26.5	+0.3/−0.5	0.8	±0.05
22.5	±0.4	13.0	+0.2/−0.5	22.0	+0.1/−0.5	26.5	+0.3/−0.5	0.8	±0.05
27.5	±0.4	13.0	+0.2/−0.7	22.0	+0.1/−0.7	32.0	+0.3/−0.7	0.8	±0.05
27.5	±0.4	14.0	+0.2/−0.7	28.0	+0.1/−0.7	32.0	+0.3/−0.7	0.8	±0.05
27.5	±0.4	18.0	+0.2/−0.7	33.0	+0.1/−0.7	32.0	+0.3/−0.7	0.8	±0.05
37.5	±0.4	13.0	+0.2/−0.7	24.0	+0.1/−0.7	41.5	+0.3/−0.7	1.0	±0.05
37.5	±0.4	16.0	+0.2/−0.7	28.5	+0.1/−0.7	41.5	+0.3/−0.7	1.0	±0.05
37.5	±0.4	20.0	+0.2/−0.7	40.0	+0.1/−0.7	41.5	+0.3/−0.7	1.0	±0.05

Note: See Ordering Options Table for lead length (LL/H_0) options.

Downloaded from Arrow.com.

Performance Characteristics

Dielectric	Polypropylene film			
Plates	Metal layer deposited by evaporation under vacum			
Winding	Non-inductive type			
Leads	Tinned wire			
Protection	Plastic case, thermosetting resin filled. Box material is solvent resistant and flame retardant according to UL 94			
Related Documents	IEC 60384-14, EN 60384-14			
Rated Voltage (V_R)	300 VAC (50/60 Hz)			
Recommended DC Voltage	1,500 VDC			
Capacitance Range	0.001 – 1.0 µF			
Capacitance Values	E6 series (IEC 60063)			
Capacitance Tolerance	±10%, ±20%			
Temperature Range	−40°C to +125°C			
Climatic Category	40/110/56 IEC 60068-1			
Reliability	Operational life at rated voltage: 100,000 hours at 85°C (60,000 hours for lead spacing 7.5 mm parts); 2,000 hours at 125°C			
Storage Conditions	Storage time: ≤ 24 months from the date marked on the label package			
	Average relative humidity per year ≤ 70%			
	RH ≤ 85% for 30 days randomly distributed throughout the year			
	Dew is absent			
	Temperature: −40 to 80°C (see "Maximum Humidity in Storage Conditions" graph below)			
Approvals	ENEC, UL, cUL, CQC			
Dissipation Factor (tanδ) at 1 kHz	Maximum Values at +25°C ±5°C			
	Pitch = 7.5 mm	Pitch = 10 mm	Pitch = 15 – 27.5 mm	Pitch = 37.5 mm
	1.5%	0.8%	0.3% (typical: 0.2%)	0.2%
Hi-Pot Test	Terminal To Terminal	4.0k VDC (Type test 60 seconds, each ramp 5 seconds)		
	Terminal To Case	4.0k VDC (Type test 60 seconds, each ramp 5 seconds)		
Insulation Resistance	Measured at +25°C ±5°C			
	Minimum Values Between Terminals			
	Voltage Charge	Voltage Charge Time	C ≤ 0.33 µF	C > 0.33 µF
	100 VDC	1 minute	≥ 1 • 10^5 MΩ (≥ 5 • 10^5 MΩ)*	≥ 30,000 MΩ • µF (≥ 150,000 MΩ • µF)*

** Typical value*

Downloaded from Arrow.com.

Performance Characteristics cont.

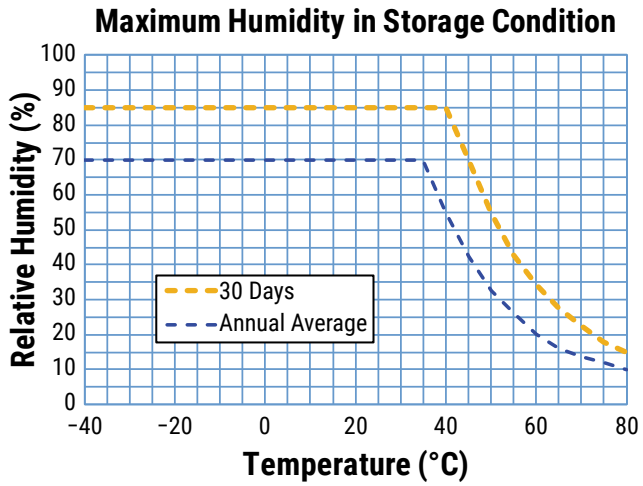

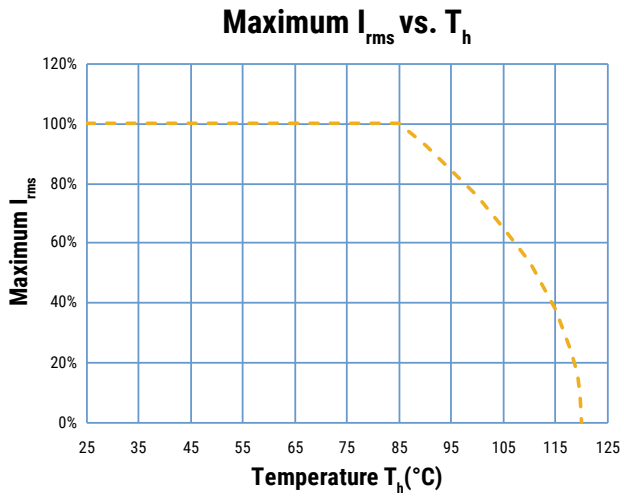

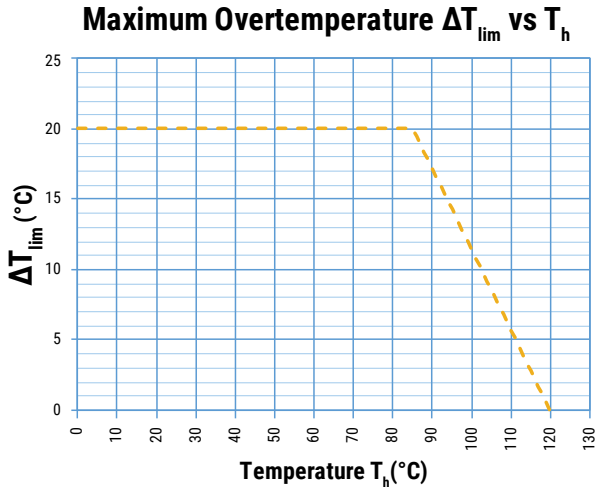

T_h is the maximum ambient temperature surrounding the capacitor or hottest contact point (e.g. tracks), whichever is higher, in the worst operation conditions in °C.

Downloaded from Arrow.com.

Maximum Voltage (V_{rms}) Versus Frequency (Sinusoidal Waveform/Th ≤ 85°C)

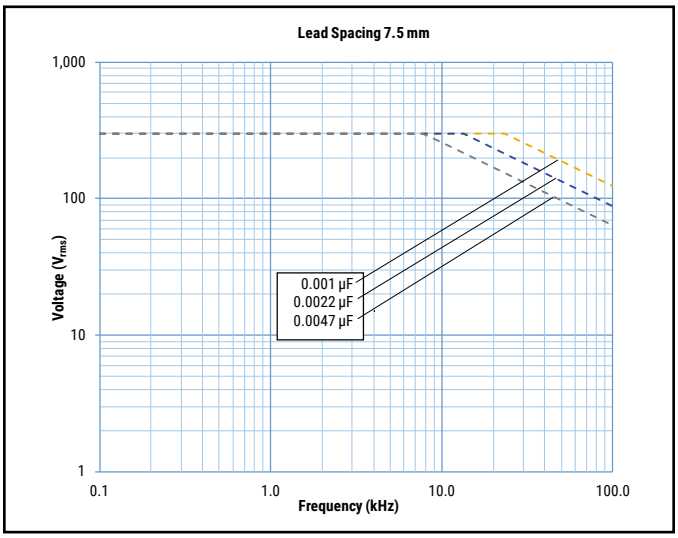

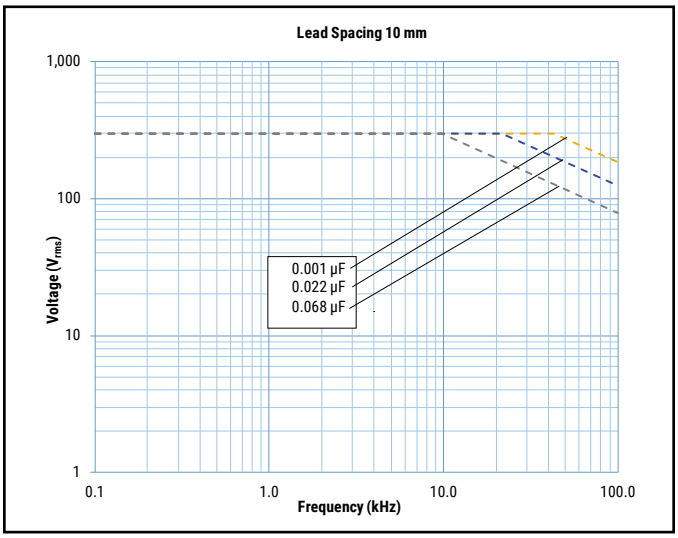

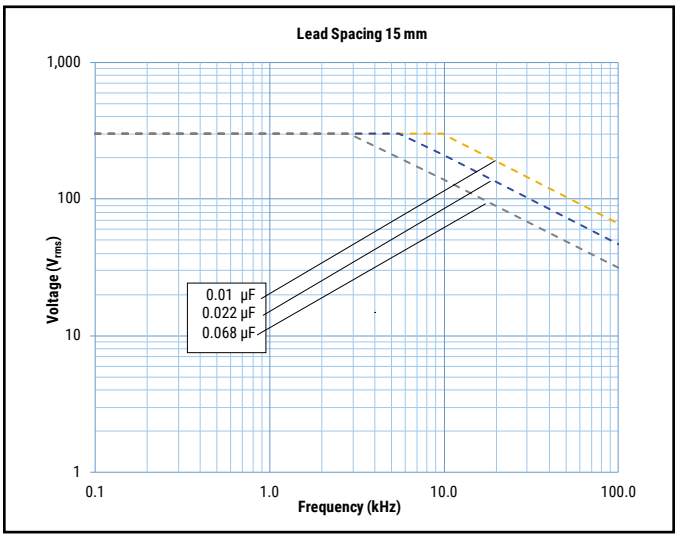

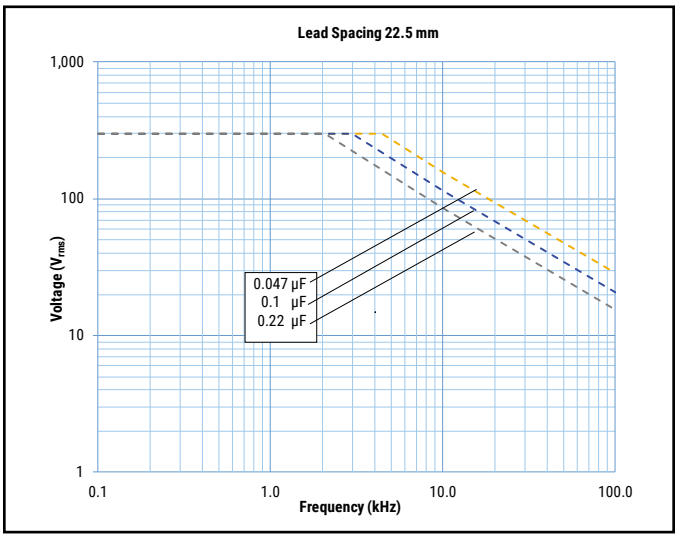

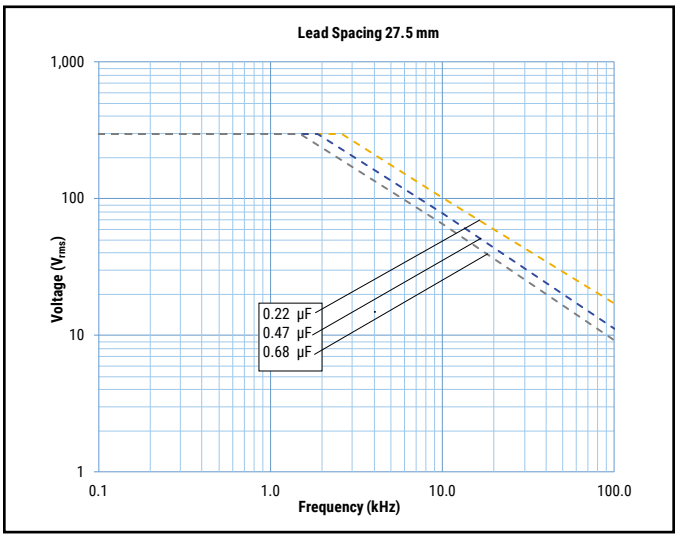

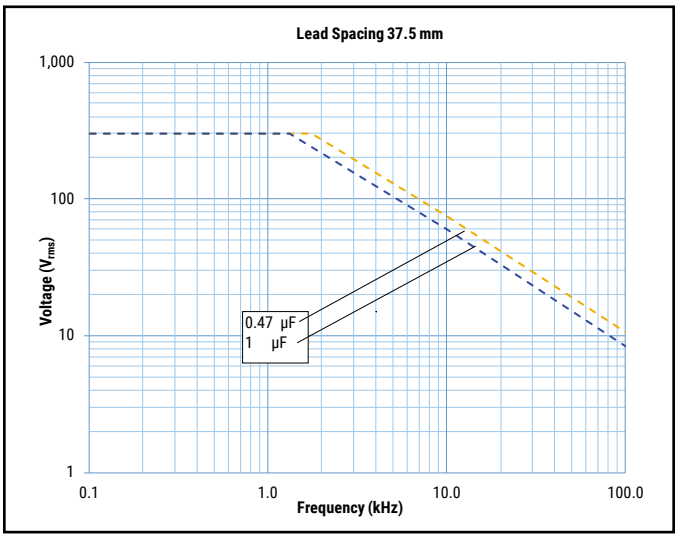

Downloaded from Arrow.com.

Maximum Current (I_{rms}) Versus Frequency (Sinusoidal Waveform/Th ≤ 85°C)

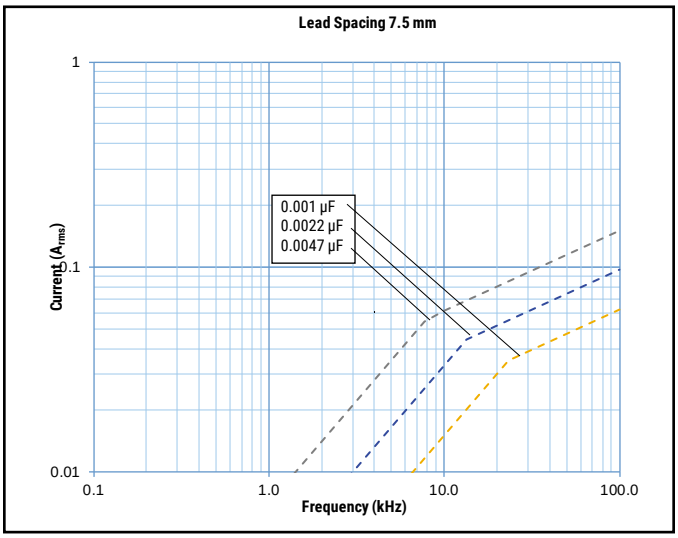

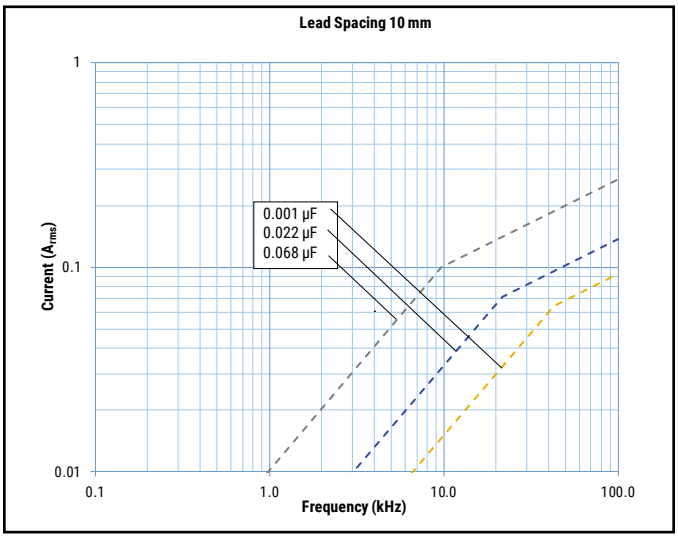

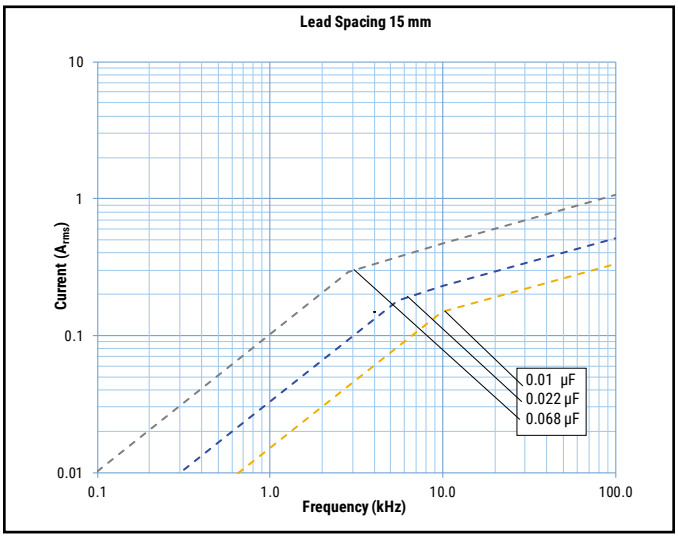

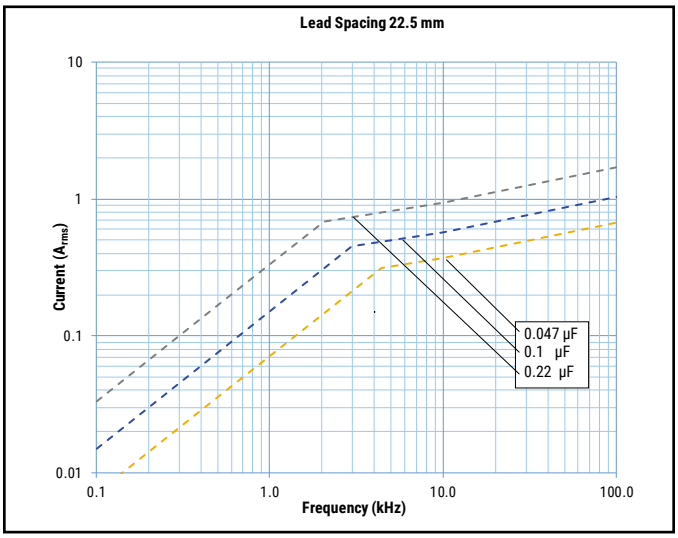

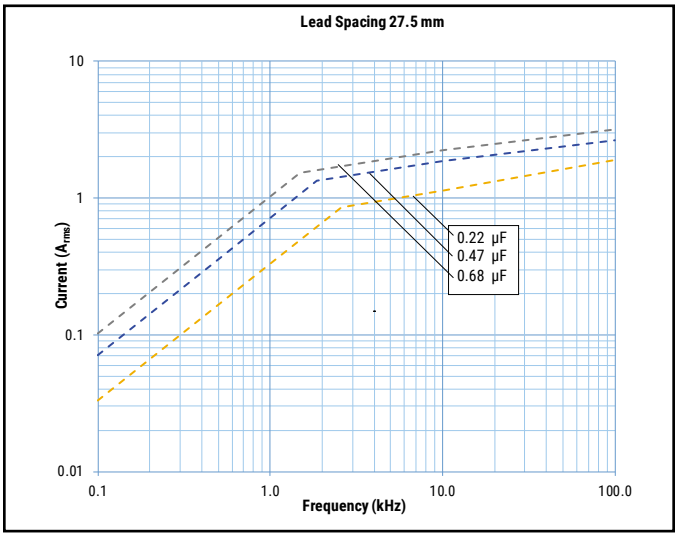

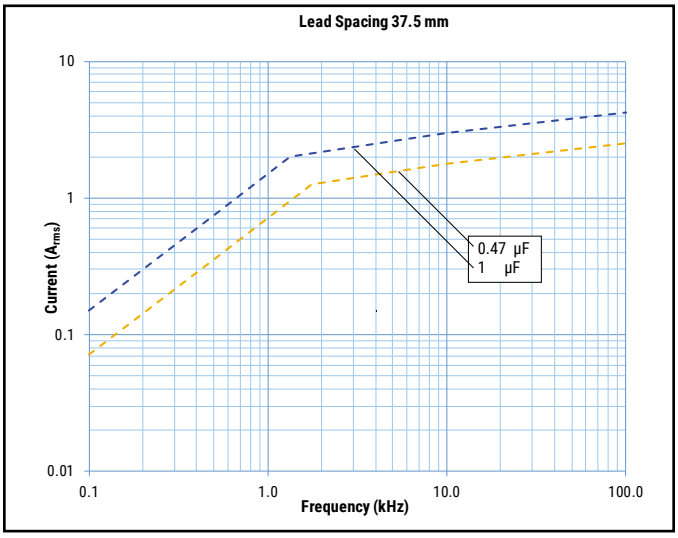

Downloaded from Arrow.com.

Qualification

Automotive grade products meet or exceed the requirements outlined by the Automotive Electronics Council. Details regarding test methods and conditions are referenced in document AEC–Q200, Stress Test Qualification for Passive Components. For additional information regarding the Automotive Electronics Council and AEC–Q200, please visit their website at www.aecouncil.com.

Impedance Graph

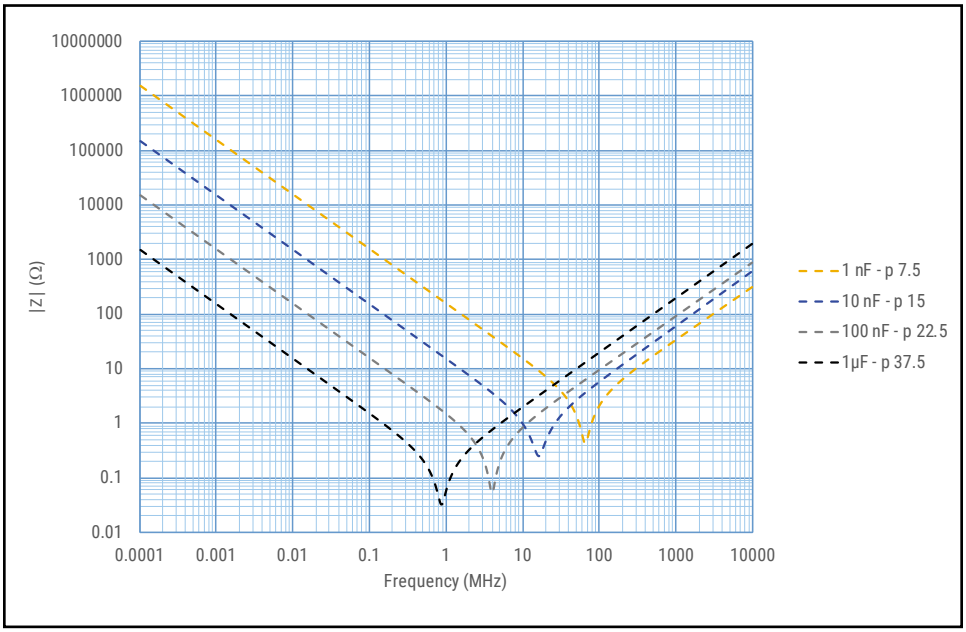

Downloaded from Arrow.com.

Environmental Test Data

Test	IEC Publication	Procedure
Endurance	IEC 60384-14	1.7 x V_R VAC 50 Hz, once every hour increase to 1,000 VAC for 0.1 second, 1,000 hours at upper rated temperature"
Vibration	IEC 60068-2-6 Test Fc	3 directions at 2 hours each 10 – 55 Hz at 0.75 mm or 98m/s^2
Bump	IEC 60068-2-29 Test Eb	1,000 bumps at 390 m/s^2
Change of Temperature	IEC 60068-2-14 Test Na	Upper and lower rated temperature 5 cycles
Active Flammability	IEC 60384-14	V_R +20 surge pulses at 5 kV (pulse every 5 seconds)
Passive Flammability	IEC 60384-14	IEC 60384-1, IEC 60695-11-5 Needle Flame Test
Damp Heat Steady State	IEC 60068-2-78 Test Cab	+40°C and 93% RH, 56 days
THB test1		65°C, 93% RH and 1000 VDC, 1,600 hours Capacitance change (Δ C/C): ≤ 10% for ≥P10 (≤20% for P7.5 parts) Dissipation factor change (Δtanδ): ≤ 150 * 10^{-4} (at 1 kHz for Cap > 1 µF) Dissipation factor change (Δtanδ): ≤ 240 * 10^{-4} (at 10 kHz for Cap ≤ 1 µF) IR ≥ 50% of initial limit or minimum 200 MΩ
THB test2		85°C, 85% RH and 1,500 VDC, 1,000 hours Capacitance change (Δ C/C): ≤ 10% for ≥P10 (≤20% for P7.5 parts) Dissipation factor change (Δtanδ): ≤ 150 * 10^{-4} (at 1 kHz for Cap > 1 µF) Dissipation factor change (Δtanδ): ≤ 240 * 10^{-4} (at 10 kHz for Cap ≤ 1 µF) IR ≥ 50% of initial limit or minimum 200 MΩ
THB test3 For P10 (≥ 2.2 nF) and ≥ P15 Parts		85°C, 85% RH and 300 VAC, 1,000 hours Capacitance change (Δ C/C): ≤ 10% Dissipation factor change (Δtanδ): ≤ 150 * 10^{-4} (at 1 kHz for Cap > 1 µF) Dissipation factor change (Δtanδ): ≤ 240 * 10^{-4} (at 10 kHz for Cap ≤ 1 µF) IR ≥ 50% of initial limit or minimum 200 MΩ
THB test4 For P10 (< 2.2 nF) and all P7.5 Parts		85°C, 85% RH and 240 VAC, 1,000 hours Capacitance change (Δ C/C): ≤ 10% for P10 (≤20% for P7.5 parts) Dissipation factor change (Δtanδ): ≤ 150 * 10^{-4} (at 1 kHz for Cap > 1 µF) Dissipation factor change (Δtanδ): ≤ 240 * 10^{-4} (at 10 kHz for Cap ≤ 1 µF) IR ≥ 50% of initial limit or minimum 200 MΩ
THB test5 For P10 (< 2.2 nF) Parts		85°C, 85% RH and 300 VAC, 500 hours Capacitance change (Δ C/C): ≤ 10% Dissipation factor change (Δtanδ): ≤ 150 * 10^{-4} (at 1 kHz for Cap > 1 µF) Dissipation factor change (Δtanδ): ≤ 240 * 10^{-4} (at 10 kHz for Cap ≤ 1 µF) IR ≥ 50% of initial limit or minimum 200 MΩ

Approvals

Certification Body	Mark	Specification	File Number
IMQ S.p.A.		EN/IEC 60384-14	V4160
UL		UL 60384-14 and CAN/CSA E60384-14 (300 VAC)	E97797
CQC		IEC 60384-14	CQC13001101264 CQC15001128704 CQC19001218777 CQC13001087758

Downloaded from Arrow.com.

Environmental Compliance

All KEMET EMI capacitors are RoHS Compliant.

Table 1 – Ratings & Part Number Reference

Capacitance Value (µF)	Dimensions in mm			Lead Spacing (S)	dV/dt (V/µs)	KEMET Part Number	Customer Part Number
	T	H	L				
0.001	4.0	9.0	10.0	7.5	800	413D1100(1)T0(2)	R413D1100(1)T0(2)
0.0015	4.0	9.0	10.0	7.5	800	413D1150(1)T0(2)	R413D1150(1)T0(2)
0.0022	5.0	10.5	10.0	7.5	800	413D1220(1)T0(2)	R413D1220(1)T0(2)
0.0033	6.0	12.0	10.5	7.5	800	413D1330(1)T0(2)	R413D1330(1)T0(2)
0.0047	6.0	12.0	10.5	7.5	800	413D1470(1)T0(2)	R413D1470(1)T0(2)
0.001	4.0	9.0	13.0	10.0	800	413F1100(1)T0(2)	R413F1100(1)T0(2)
0.0015	4.0	9.0	13.0	10.0	800	413F1150(1)T0(2)	R413F1150(1)T0(2)
0.0022	4.0	9.0	13.0	10.0	800	413F1220(1)T0(2)	R413F1220(1)T0(2)
0.0033	5.0	11.0	13.0	10.0	800	413F1330(1)T0(2)	R413F1330(1)T0(2)
0.0047	5.0	11.0	13.0	10.0	800	413F1470(1)T1(2)	R413F1470(1)T1(2)
0.0047	6.0	12.0	13.0	10.0	800	413F1470(1)T0(2)	R413F1470(1)T0(2)
0.0068	6.0	12.0	13.0	10.0	800	413F1680(1)T0(2)	R413F1680(1)T0(2)
0.0047	5.0	11.0	18.0	15.0	600	413I1470(1)T0(2)	R413I1470(1)T0(2)
0.0068	5.0	11.0	18.0	15.0	600	413I1680(1)T0(2)	R413I1680(1)T0(2)
0.010	5.0	11.0	18.0	15.0	600	413I2100(1)T0(2)	R413I2100(1)T0(2)
0.015	5.0	11.0	18.0	15.0	600	413I2150(1)T1(2)	R413I2150(1)T1(2)
0.015	6.0	12.0	18.0	15.0	600	413I2150(1)T0(2)	R413I2150(1)T0(2)
0.022	6.0	12.0	18.0	15.0	600	413I2220(1)T1(2)	R413I2220(1)T1(2)
0.022	7.5	13.5	18.0	15.0	600	413I2220(1)T0(2)	R413I2220(1)T0(2)
0.033	7.5	13.5	18.0	15.0	600	413I2330(1)T1(2)	R413I2330(1)T1(2)
0.033	8.5	14.5	18.0	15.0	600	413I2330(1)T0(2)	R413I2330(1)T0(2)
0.047	10.0	16.0	18.0	15.0	600	413I2470(1)T0(2)	R413I2470(1)T0(2)
0.068	11.0	19.0	18.0	15.0	600	413I2680(1)T0(2)	R413I2680(1)T0(2)
0.047	6.0	15.0	26.5	22.5	500	413N2470(1)T0(2)	R413N2470(1)T0(2)
0.068	7.0	16.0	26.5	22.5	500	413N2680(1)T0(2)	R413N2680(1)T0(2)
0.10	8.5	17.0	26.5	22.5	500	413N3100(1)T1(2)	R413N3100(1)T1(2)
0.10	10.0	18.5	26.5	22.5	500	413N3100(1)T0(2)	R413N3100(1)T0(2)
0.15	10.0	18.5	26.5	22.5	500	413N3150(1)T1(2)	R413N3150(1)T1(2)
0.15	11.0	20.0	26.5	22.5	500	413N3150(1)T0(2)	R413N3150(1)T0(2)
0.22	13.0	22.0	26.5	22.5	500	413N3220(1)T0(2)	R413N3220(1)T0(2)
0.22	13.0	22.0	32.0	27.5	400	413R3220(1)T0(2)	R413R3220(1)T0(2)
0.33	14.0	28.0	32.0	27.5	400	413R3330(1)T0(2)	R413R3330(1)T0(2)
0.47	18.0	33.0	32.0	27.5	400	413R3470(1)T0(2)	R413R3470(1)T0(2)
0.68	18.0	33.0	32.0	27.5	400	413R3680(1)T0(2)	R413R3680(1)T0(2)
0.47	13.0	24.0	41.5	37.5	300	413W3470(1)T0(2)	R413W3470(1)T0(2)
0.68	16.0	28.5	41.5	37.5	300	413W3680(1)T0(2)	R413W3680(1)T0(2)
1.0	20.0	40.0	41.5	37.5	300	413W4100(1)T0(2)	R413W4100(1)T0(2)
Capacitance Value (µF)	**T (mm)**	**H (mm)**	**L (mm)**	**Lead Spacing (S)**	**dV/dt (V/µs)**	**KEMET Part Number**	**Customer Part Number**

(1) Insert lead and packaging code. See Ordering Options Table for available options.
(2) M = ±20%, K = ±10%
(3) M = ±20% (only available tolerance).

Downloaded from Arrow.com.

Soldering Process

The implementation of the RoHS directive has resulted in the selection of SnAgCu (SAC) alloys or SnCu alloys as primary solder. This has increased the liquidus temperature from that of 183°C for SnPb eutectic alloy to 217 – 221°C for the new alloys. As a result, the heat stress to the components, even in wave soldering, has increased considerably due to higher pre-heat and wave temperatures. Polypropylene capacitors are especially sensitive to heat (the melting point of polypropylene is 160 – 170°C). Wave soldering can be destructive, especially for mechanically small polypropylene capacitors (with lead spacing of 5 mm to 15 mm), and great care has to be taken during soldering. The recommended solder profiles from KEMET should be used. Please consult KEMET with any questions. In general, the wave soldering curve from IEC Publication 61760-1 Edition 2 serves as a solid guideline for successful soldering. Please see Figure 1.

Reflow soldering is not recommended for through-hole film capacitors. Exposing capacitors to a soldering profile in excess of the above the recommended limits may result to degradation or permanent damage to the capacitors.

Do not place the polypropylene capacitor through an adhesive curing oven to cure resin for surface mount components. Insert through-hole parts after the curing of surface mount parts. Consult KEMET to discuss the actual temperature profile in the oven, if through-hole components must pass through the adhesive curing process. A maximum two soldering cycles is recommended. Please allow time for the capacitor surface temperature to return to a normal temperature before the second soldering cycle.

Manual Soldering Recommendations

The following is the recommendation for manual soldering with a soldering iron.

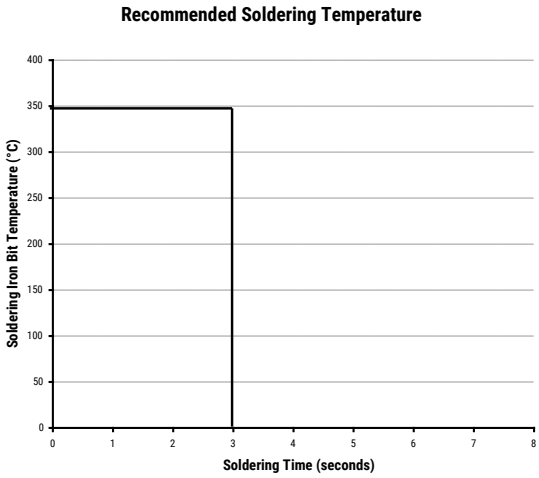

The soldering iron tip temperature should be set at 350°C (+10°C maximum) with the soldering duration not to exceed more than 3 seconds.

Wave Soldering Recommendations

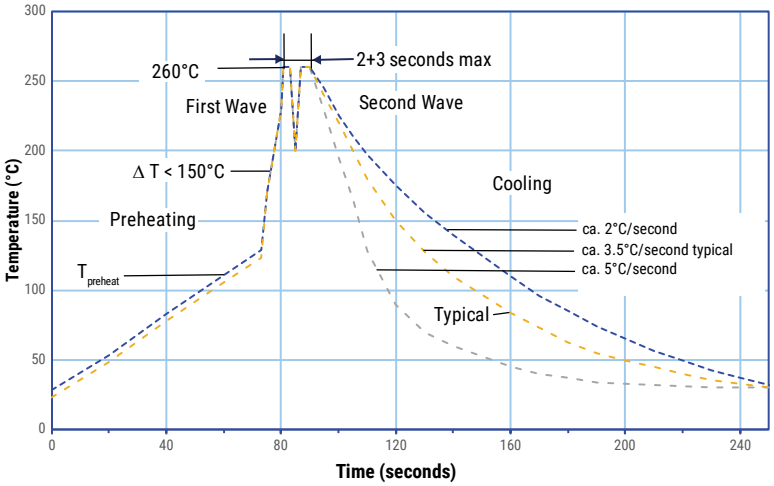

Downloaded from Arrow.com.

Soldering Process cont.

Wave Soldering Recommendations cont.

1. The table indicates the maximum set-up temperature of the soldering process
Figure 1

Dielectric Film Material	Maximum Preheat Temperature		Maximum Peak Soldering Temperature	
	Capacitor Pitch ≤ 15 mm	Capacitor Pitch > 15 mm	Capacitor Pitch ≤ 15 mm	Capacitor Pitch > 15 mm
Polyester	130°C	130°C	270°C	270°C
Polypropylene	125°C	130°C	260°C	270°C
Paper	130°C	140°C	270°C	270°C
Polyphenylene Sulphide	150°C	160°C	270°C	270°C

2. The maximum temperature measured inside the capacitor:
   Set the temperature so that inside the element the maximum temperature is below the limit:

Dielectric Film Material	Maximum temperature measured inside the element
Polyester	160°C
Polypropylene	125°C
Paper	160°C
Polyphenylene sulphide	160°C

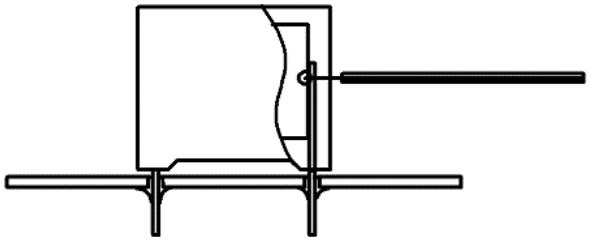

Temperature monitored inside the capacitor.

Selective Soldering Recommendations

Selective dip soldering is a variation of reflow soldering. In this method, the printed circuit board with through-hole components to be soldered is preheated and transported over the solder bath as in normal flow soldering without touching the solder. When the board is over the bath, it is stopped and pre-designed solder pots are lifted from the bath with molten solder only at the places of the selected components, and pressed against the lower surface of the board to solder the components.

The temperature profile for selective soldering is similar to the double wave flow soldering outlined in this document, **however, instead of two baths, there is only one bath with a time from 3 to 10 seconds.** In selective soldering, the risk of overheating is greater than in double wave flow soldering, and great care must be taken so that the parts are not overheated.

Downloaded from Arrow.com.

Mounting

Resistance to Vibration and Mechanical Shock

AEC-Q200 Rev. E Mechanical Stress Tests:

Mechanical Shock	**MIL-SDT-202 Method 213**	Figure 1 of Method 213 • THT: Condition C • SMD: Condition C • Tested per the Supplier's recommended mounting method
Vibration	**MIL-SDT-202 Method 204**	• 5 g for 20 minutes, 12 cycles each of 3 orientations • Tested per the Supplier's recommended mounting method • Verification of transfer load: during setup, verify that with the selected PCB design (size, thickness and secure points), or an alternative mount, that the transferred load onto the component corresponds to the requested load. This verification can be achieved using a laser vibrometer or other adequate measuring device • Test from 10 Hz – 2,000 Hz.

The capacitors are designed for PCB mounting. The stand-off pipes must be in good contact with the printed circuit board. The capacitors with pitch ≤ 22.5 mm can be mechanically fixed by the leads, for pitch > 22.5 mm, the capacitor body has to be properly fixed (e.g. clamped or glued).

Construction

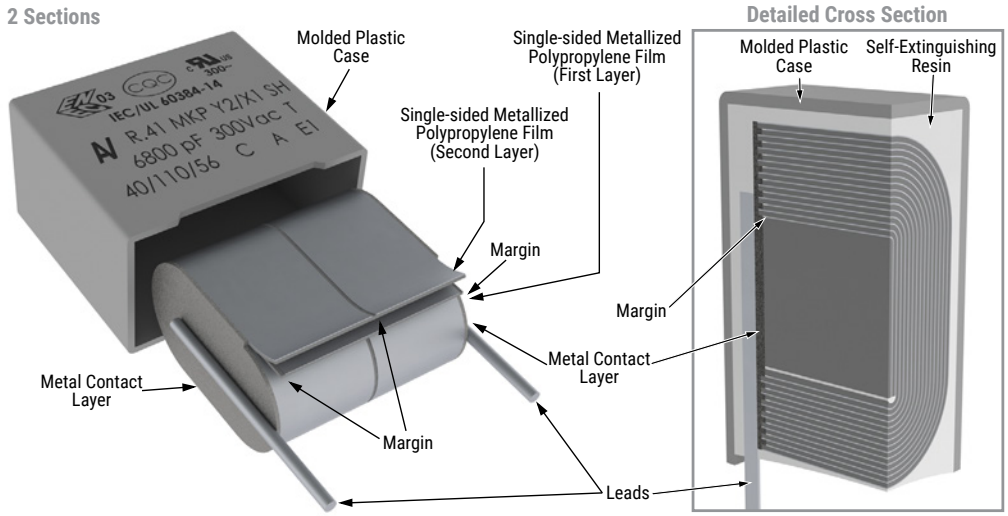

Winding Scheme

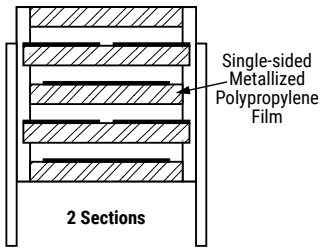

Downloaded from Arrow.com.

Marking

Lead Spacing 7.5 mm

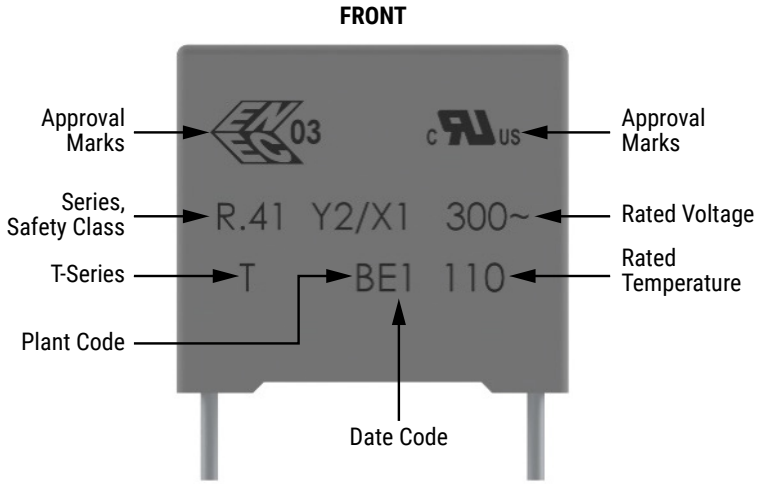

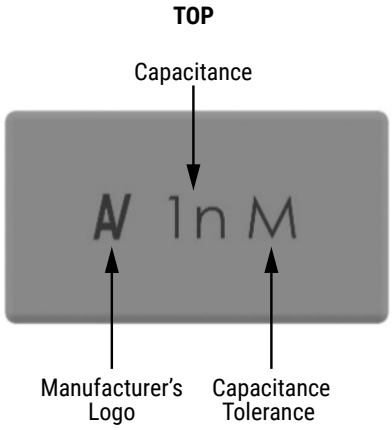

NOTE: Hot imprinting with or without color or ink jet or laser marking

Lead Spacing 7.5 mm (alternatives*)

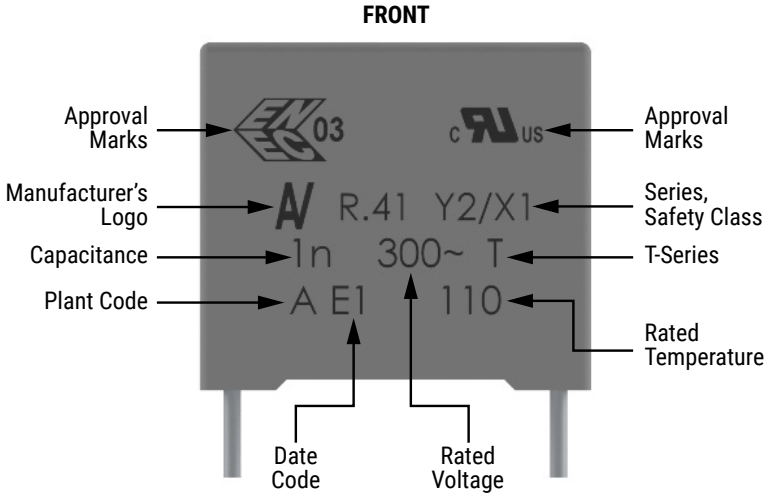

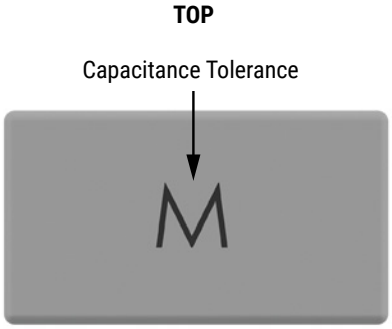

NOTE: Hot imprinting with or without color or ink jet or laser marking

** Differences caused by technology (clichee, laser or ink jet) and production line*

Slight change in the layout can be possible but this does not affect the content of the information of the current marking.
This change will be achieved without impact to product form, fit or function, as the products are equivalent with respect to physical, mechanical, quality and reliability characteristics.

Downloaded from Arrow.com.

Marking cont.

Lead Spacing 10 mm

FRONT

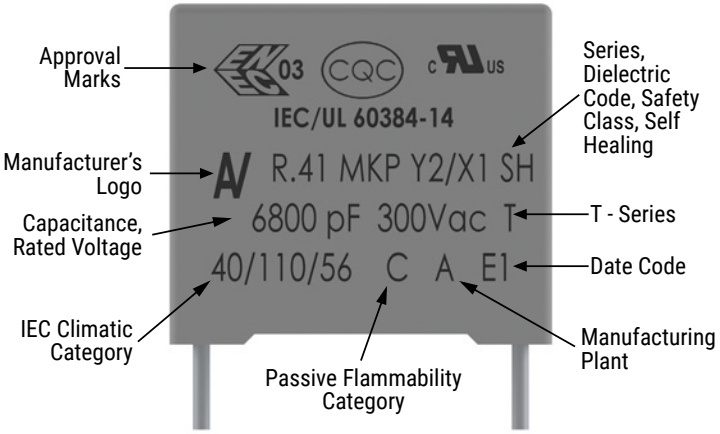

TOP

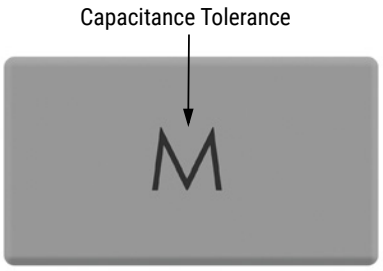

NOTE: Hot imprinting with or without color or ink jet or laser marking

Lead Spacing ≥ 15 mm, 22.5 mm (small case sizes)

FRONT

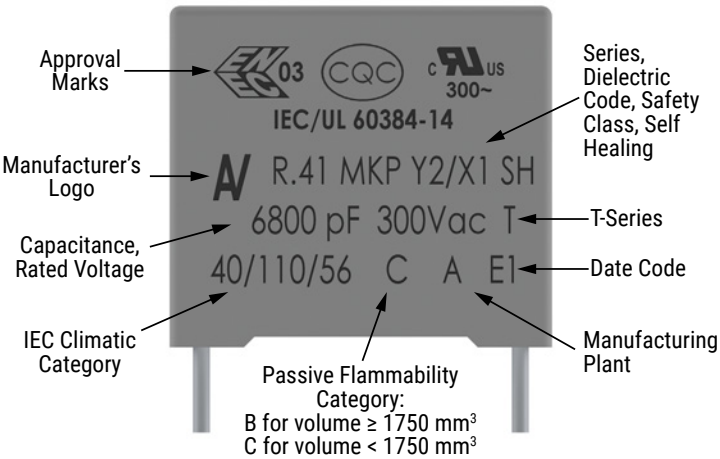

TOP

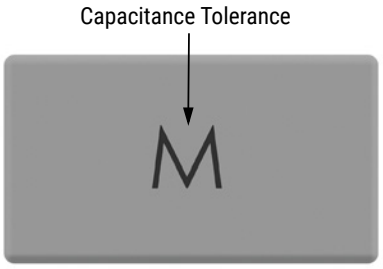

NOTE: Hot imprinting with or without color or ink jet or laser marking

** Differences caused by technology (clichee, laser or ink jet) and production line*

Slight change in the layout can be possible but this does not affect the content of the information of the current marking.
This change will be achieved without impact to product form, fit or function, as the products are equivalent with respect to physical, mechanical, quality and reliability characteristics.

Downloaded from Arrow.com.

Marking cont.

Lead Spacing 22.5 and 27.5 mm (alternatives*) and 37.5 mm

FRONT

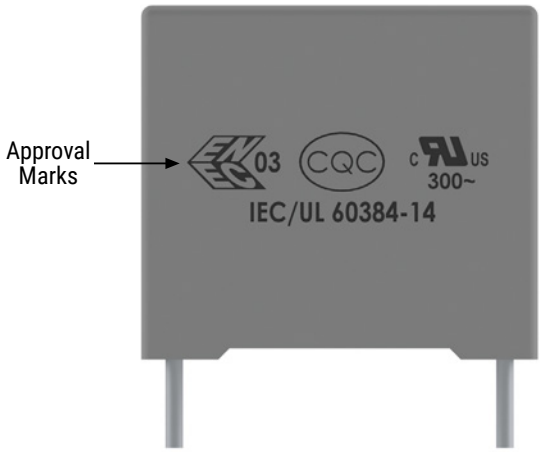

TOP

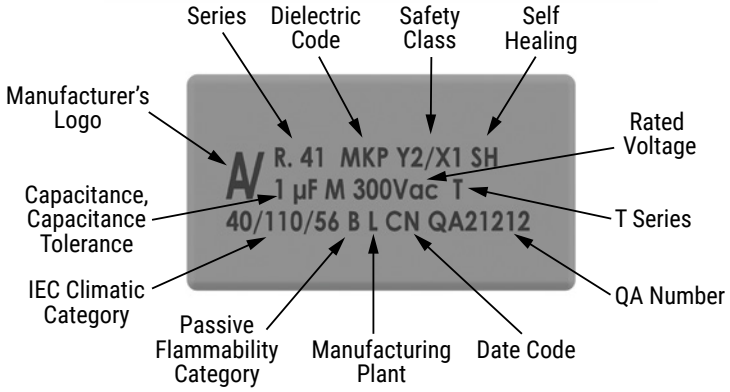

** Differences caused by technology (clichee, laser or ink jet) and production line*

Slight change in the layout can be possible but this does not affect the content of the information of the current marking.
This change will be achieved without impact to product form, fit or function, as the products are equivalent with respect to physical, mechanical, quality and reliability characteristics.

Manufacturing Date Code (IEC 60062)									
Year	**Code**	**Year**	**Code**	**Year**	**Code**	**Month**	**Code**	**Month**	**Code**
2020	M	2027	V	2034	E	January	1	July	7
2021	N	2028	W	2035	F	February	2	August	8
2022	P	2029	X	2036	H	March	3	September	9
2023	R	2030	A	2037	J	April	4	October	O
2024	S	2031	B	2038	K	May	5	November	N
2025	T	2032	C	2039	L	June	6	December	D
2026	U	2033	D	2040	M				

Downloaded from Arrow.com.

Packaging Quantities

Lead Spacing (mm)	Thickness (mm)	Height (mm)	Length (mm)	Bulk Short Leads	Bulk Long Leads		Standard Reel ø 355 mm	Large Reel ø 500 mm	Ammo Taped
Lead and Packaging Code:				00 - JA - JB JE - JH	40 - 50	JM	GY - CK[1]	CK	DQ
7.5	4.0	9.0	10.0	2,000	-	1,500	1,500	-	2,100
	5.0	10.5	10.0	1,500	-	1,000	1,200	-	1,600
	6.0	12.0	10.5	1,000	-	800	1,000	-	1,350
10	4.0	9.0	13.0	2,000	1,800	2,200	750	1,500	1,000
	5.0	11.0	13.0	1,300	1,500	2,000	600	1,250	800
	6.0	12.0	13.0	1,000	1,200	1,800	500	1,000	680
15	5.0	11.0	18.0	2,000	1,000	1,250	600	1,250	800
	6.0	12.0	18.0	1,750	900	1,000	500	1,000	680
	7.5	13.5	18.0	1,000	700	800	350	800	500
	8.5	14.5	18.0	1,000	500	650	300	700	440
	10.0	16.0	18.0	750	500	550	270	600	380
	11.0	19.0	18.0	450	350	400	270	500	340
22.5	6.0	15.0	26.5	805	500	450	300	700	464
	7.0	16.0	26.5	700	500	450	250	550	380
	8.5	17.0	26.5	468	300	350	250	450	280
	10.0	18.5	26.5	396	300	350	160	350	235
	11.0	20.0	26.5	360	250	200	160	350	217
	13.0	22.0	26.5	300	200	150	130	300	-
27.5	13.0	22.0	32.0	480	288	288	-	300	-
	14.0	28.0	32.0	352	176	176	-	-	-
	18.0	33.0	32.0	256	128	128	-	-	-
37.5	13.0	24.0	41.5	360	216	216	-	-	-
	16.0	28.5	41.5	216	108	108	-	-	-
	20.0	40.0	41.5	126	84	84	-	-	-

1 Only for 7.5 mm lead spacing

Downloaded from Arrow.com.

Lead Taping & Packaging (IEC 60286–2)

Figure 1 — Lead Spacing 7.5 mm

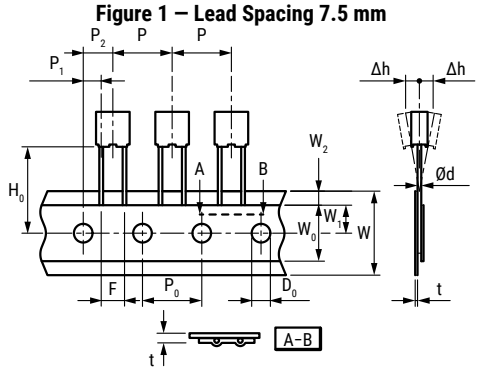

Lead Spacing 10 & 15 mm

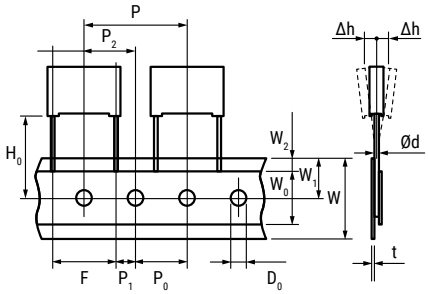

Lead Spacing 22.5 & 27.5 mm

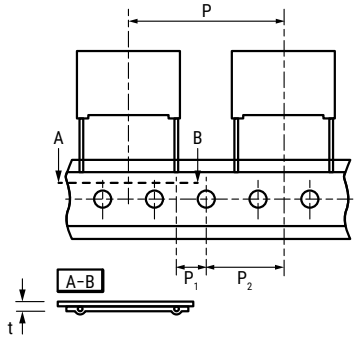

Taping Specification

Description	Symbol	Dimensions (mm)					
		Lead Spacing					Tolerance
		7.5	10.0	15.0	22.5	27.5	
Lead wire diameter	d	0.5 – 0.6	0.6	0.6 – 0.8	0.8	0.8	±0.05
Taping lead space	P	12.7	25.4	25.4	38.1	38.1	±1
Feed hole lead space *	P_0	12.7	12.7	12.7	12.7	12.7	±0.2 **
Centering of the lead wire	P_1	2.6	7.7	5.2	7.8	5.3	±0.7
Centering of the body	P_2	6.35	12.7	12.7	19.05	19.05	±1.3
Lead spacing ***	F	7.5	10.0	15.0	22.5	27.5	+0.6/−0.1
Component alignment	Δh	0	0	0	0	0	±2
Component deviation	Δp	0	0	0	0	0	±1
Height of component from tape center	H_0****	18.5	18.5	18.5	18.5	18.5	±0.5
Carrier tape width	W	18	18	18	18	18	+1/−0.5
Hold down tape width	W_0	6	9	10	10	10	Minimum
Hole position	W_1	9	9	9	9	9	±0.5
Hold down tape position	W_2	3	3	3	3	3	Maximum
Feed hole diameter	D_0	4	4	4	4	4	±0.2
Total Tape thickness	t	0.7	0.7	0.7	0.7	0.7	±0.2

** Available also 15 mm.*
*** Maximum 1 mm on 20 lead spacing.*
**** 15 mm and 10 mm taped to 7.5 mm (crimped leads) available upon request.*
***** H_0 = 16.5 mm is available upon request.*

Downloaded from Arrow.com.

Lead Taping & Packaging (IEC 60286–2) cont.

Ammo Specifications

Dimensions (mm)		
H	W	T
360	340	59

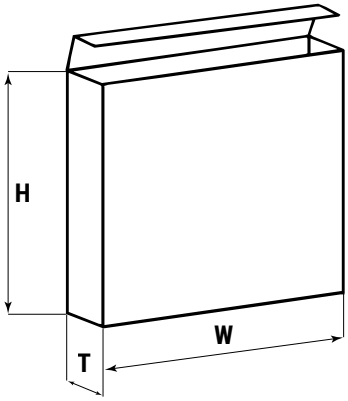

Reel Specifications

Reel Size	Dimensions (mm)		
	D	H	W
Standard	355	30	55 Maximum
Large	500	25	

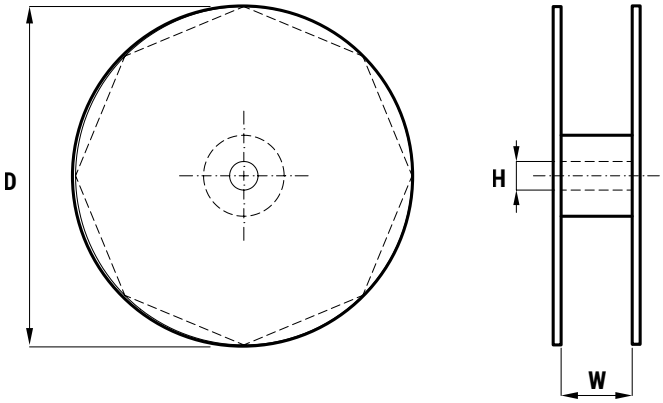

Downloaded from Arrow.com.

KEMET Electronics Corporation Sales Offices

For a complete list of our global sales offices, please visit www.kemet.com/sales.

Disclaimer

YAGEO Corporation and its affiliates do not recommend the use of commercial or automotive grade products for high reliability applications or manned space flight.

All product specifications, statements, information and data (collectively, the "Information") in this datasheet are subject to change. The customer is responsible for checking and verifying the extent to which the Information contained in this publication is applicable to an order at the time the order is placed. All Information given herein is believed to be accurate and reliable, but it is presented without guarantee, warranty, or responsibility of any kind, expressed or implied.

Statements of suitability for certain applications are based on KEMET Electronics Corporation's ("KEMET") knowledge of typical operating conditions for such applications, but are not intended to constitute – and KEMET specifically disclaims – any warranty concerning suitability for a specific customer application or use. The Information is intended for use only by customers who have the requisite experience and capability to determine the correct products for their application. Any technical advice inferred from this Information or otherwise provided by KEMET with reference to the use of KEMET's products is given gratis, and KEMET assumes no obligation or liability for the advice given or results obtained.

Although KEMET designs and manufactures its products to the most stringent quality and safety standards, given the current state of the art, isolated component failures may still occur. Accordingly, customer applications which require a high degree of reliability or safety should employ suitable designs or other safeguards (such as installation of protective circuitry or redundancies) in order to ensure that the failure of an electrical component does not result in a risk of personal injury or property damage.

Although all product–related warnings, cautions and notes must be observed, the customer should not assume that all safety measures are indicated or that other measures may not be required.

Additional information about production site flexibility can be found <here>

KEMET is a registered trademark of KEMET Electronics Corporation.

Downloaded from Arrow.com.