THIS DRAWING IS UNPUBLISHED. RELEASED FOR PUBLICATION -,- .
© COPYRIGHT - 5 ALL RIGHTS RESERVED.

LOC	DIST
GP	00

REVISIONS

P	LTR	DESCRIPTION	DATE	DWN	APVD
	A	RELEASE	04MAR2013	CJV	CWR

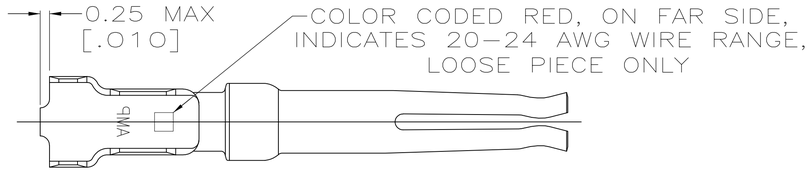

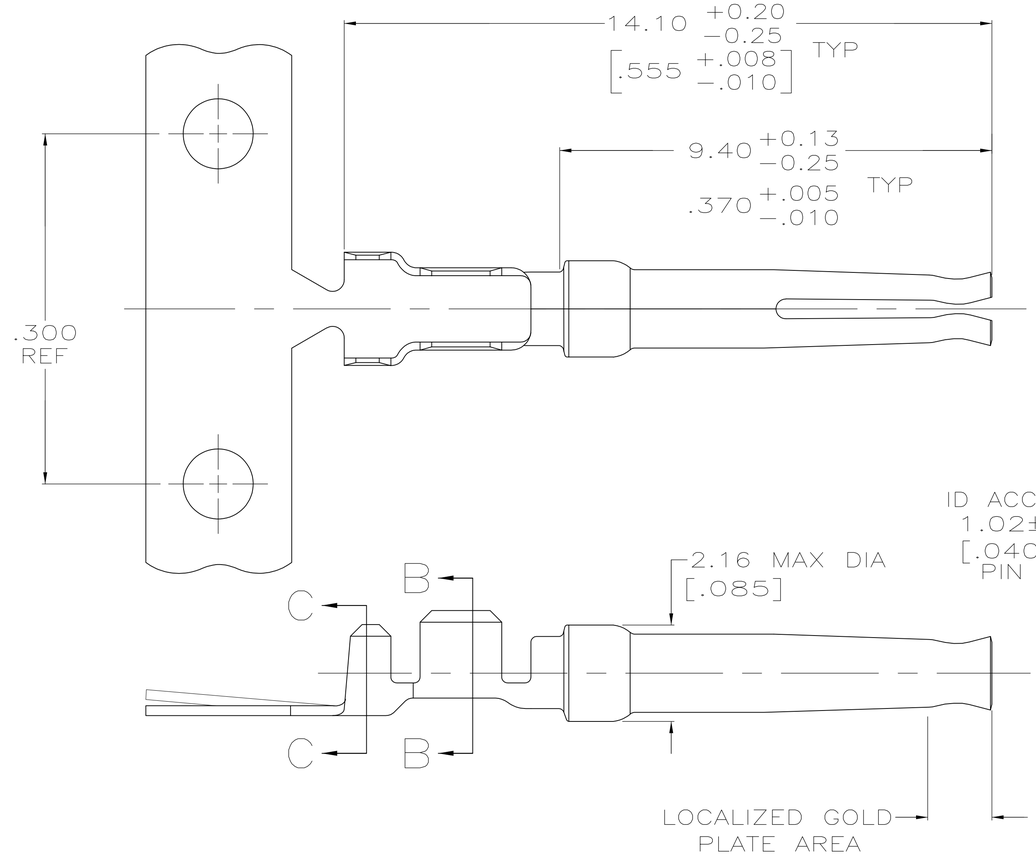

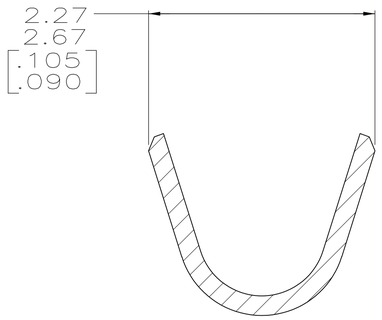

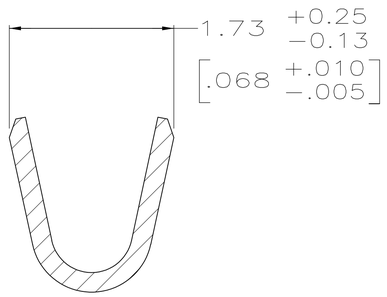

1. FOR MINI–APPLICATOR AND STRIPPER CRIMPER.
2. FOR HAND TOOL USE ONLY.
3. WIRE RANGE OF 20–24 AWG. INSULATION RANGE OF 1.27/1.52 [.050–.060].
4. GOLD PLATING MAY NOT APPEAR ON CARRIER STRIP OR INSULATION BARREL.
5. GOLD PLATING PER MIL–G–45204, NICKEL PLATING PER QQ–N–290.
6. PLATED WITH 1.27µm [.000050] GOLD ON INSIDE OF LOCALIZED GOLD PLATE AREA, 1.27µm [.000050] GOLD ON REMAINDER, ALL OVER 1.27µm [.000050] NICKEL UNDERPLATE.
7. PLATED WITH 1.27µm [.000050] GOLD ON INSIDE OF LOCALIZED GOLD PLATE AREA, GOLD FLASH ON REMAINDER, ALL OVER 1.27µm [.000050] NICKEL UNDERPLATE.

PACKAGING TYPE	FINISH	USE	LOOSE PIECE	PART NUMBER
STANDARD	7	1	–	6–66504–8
STANDARD	6	2	SEE DETAIL Z	66504–8
STANDARD	6	1	–	66504–2

THIS DRAWING IS A CONTROLLED DOCUMENT.
DIMENSIONING AND TOLERANCING PER ASME Y14.5M–2009

DIMENSIONS: mm [INCHES]

TOLERANCES UNLESS OTHERWISE SPECIFIED:
0 PLC ± –
1 PLC ± –
2 PLC ± 0.13 [.005]
3 PLC ± –
4 PLC ± –
ANGLES ± –

MATERIAL: PHOSPHOR BRONZE PER QQ–B–750

FINISH: 7 SEE TABLE

DWN C. VALENTINE 04MAR2013
CHK C. ROHDE 04MAR2013
APVD C. ROHDE 04MAR2013

PRODUCT SPEC –
APPLICATION SPEC –
WEIGHT –

TE Connectivity

NAME: SOCKET CONTACT, SIZE 20 DF, 20–24 AWG, AMPLIMITE

SIZE	CAGE CODE	DRAWING NO.	RESTRICTED TO
A1	00779	C–66504–2	–

CUSTOMER DRAWING | SCALE 15:1 | SHEET 1 OF 1 | REV A

Downloaded from Arrow.com.