User's Manual

RA8P1 Group

Evaluation Kit for RA8P1 Microcontroller Group
EK-RA8P1 v1
User's Manual

Renesas RA Family
RA8 Series

All information contained in these materials, including products and product specifications, represents information on the product at the time of publication and is subject to change by Renesas Electronics Corp. without notice. Please review the latest information published by Renesas Electronics Corp. through various means, including the Renesas Electronics Corp. website (https://www.renesas.com).

Renesas Electronics
www.renesas.com

Rev 1.04 Oct 2025

Downloaded from Arrow.com.

Notice

1. Descriptions of circuits, software and other related information in this document are provided only to illustrate the operation of semiconductor products and application examples. You are fully responsible for the incorporation or any other use of the circuits, software, and information in the design of your product or system. Renesas Electronics disclaims any and all liability for any losses and damages incurred by you or third parties arising from the use of these circuits, software, or information.
2. Renesas Electronics hereby expressly disclaims any warranties against and liability for infringement or any other claims involving patents, copyrights, or other intellectual property rights of third parties, by or arising from the use of Renesas Electronics products or technical information described in this document, including but not limited to, the product data, drawings, charts, programs, algorithms, and application examples.
3. No license, express, implied or otherwise, is granted hereby under any patents, copyrights or other intellectual property rights of Renesas Electronics or others.
4. You shall be responsible for determining what licenses are required from any third parties, and obtaining such licenses for the lawful import, export, manufacture, sales, utilization, distribution or other disposal of any products incorporating Renesas Electronics products, if required.
5. You shall not alter, modify, copy, or reverse engineer any Renesas Electronics product, whether in whole or in part. Renesas Electronics disclaims any and all liability for any losses or damages incurred by you or third parties arising from such alteration, modification, copying or reverse engineering.
6. Renesas Electronics products are classified according to the following two quality grades: “Standard” and “High Quality”. The intended applications for each Renesas Electronics product depends on the product’s quality grade, as indicated below.
   "Standard": Computers; office equipment; communications equipment; test and measurement equipment; audio and visual equipment; home electronic appliances; machine tools; personal electronic equipment; industrial robots; etc.
   "High Quality": Transportation equipment (automobiles, trains, ships, etc.); traffic control (traffic lights); large-scale communication equipment; key financial terminal systems; safety control equipment; etc.
   Unless expressly designated as a high reliability product or a product for harsh environments in a Renesas Electronics data sheet or other Renesas Electronics document, Renesas Electronics products are not intended or authorized for use in products or systems that may pose a direct threat to human life or bodily injury (artificial life support devices or systems; surgical implantations; etc.), or may cause serious property damage (space system; undersea repeaters; nuclear power control systems; aircraft control systems; key plant systems; military equipment; etc.). Renesas Electronics disclaims any and all liability for any damages or losses incurred by you or any third parties arising from the use of any Renesas Electronics product that is inconsistent with any Renesas Electronics data sheet, user’s manual or other Renesas Electronics document.
7. No semiconductor product is absolutely secure. Notwithstanding any security measures or features that may be implemented in Renesas Electronics hardware or software products, Renesas Electronics shall have absolutely no liability arising out of any vulnerability or security breach, including but not limited to any unauthorized access to or use of a Renesas Electronics product or a system that uses a Renesas Electronics product. RENESAS ELECTRONICS DOES NOT WARRANT OR GUARANTEE THAT RENESAS ELECTRONICS PRODUCTS, OR ANY SYSTEMS CREATED USING RENESAS ELECTRONICS PRODUCTS WILL BE INVULNERABLE OR FREE FROM CORRUPTION, ATTACK, VIRUSES, INTERFERENCE, HACKING, DATA LOSS OR THEFT, OR OTHER SECURITY INTRUSION (“Vulnerability Issues”). RENESAS ELECTRONICS DISCLAIMS ANY AND ALL RESPONSIBILITY OR LIABILITY ARISING FROM OR RELATED TO ANY VULNERABILITY ISSUES. FURTHERMORE, TO THE EXTENT PERMITTED BY APPLICABLE LAW, RENESAS ELECTRONICS DISCLAIMS ANY AND ALL WARRANTIES, EXPRESS OR IMPLIED, WITH RESPECT TO THIS DOCUMENT AND ANY RELATED OR ACCOMPANYING SOFTWARE OR HARDWARE, INCLUDING BUT NOT LIMITED TO THE IMPLIED WARRANTIES OF MERCHANTABILITY, OR FITNESS FOR A PARTICULAR PURPOSE.
8. When using Renesas Electronics products, refer to the latest product information (data sheets, user’s manuals, application notes, “General Notes for Handling and Using Semiconductor Devices” in the reliability handbook, etc.), and ensure that usage conditions are within the ranges specified by Renesas Electronics with respect to maximum ratings, operating power supply voltage range, heat dissipation characteristics, installation, etc. Renesas Electronics disclaims any and all liability for any malfunctions, failure or accident arising out of the use of Renesas Electronics products outside of such specified ranges.
9. Although Renesas Electronics endeavors to improve the quality and reliability of Renesas Electronics products, semiconductor products have specific characteristics, such as the occurrence of failure at a certain rate and malfunctions under certain use conditions. Unless designated as a high reliability product or a product for harsh environments in a Renesas Electronics data sheet or other Renesas Electronics document, Renesas Electronics products are not subject to radiation resistance design. You are responsible for implementing safety measures to guard against the possibility of bodily injury, injury or damage caused by fire, and/or danger to the public in the event of a failure or malfunction of Renesas Electronics products, such as safety design for hardware and software, including but not limited to redundancy, fire control and malfunction prevention, appropriate treatment for aging degradation or any other appropriate measures. Because the evaluation of microcomputer software alone is very difficult and impractical, you are responsible for evaluating the safety of the final products or systems manufactured by you.
10. Please contact a Renesas Electronics sales office for details as to environmental matters such as the environmental compatibility of each Renesas Electronics product. You are responsible for carefully and sufficiently investigating applicable laws and regulations that regulate the inclusion or use of controlled substances, including without limitation, the EU RoHS Directive, and using Renesas Electronics products in compliance with all these applicable laws and regulations. Renesas Electronics disclaims any and all liability for damages or losses occurring as a result of your noncompliance with applicable laws and regulations.
11. Renesas Electronics products and technologies shall not be used for or incorporated into any products or systems whose manufacture, use, or sale is prohibited under any applicable domestic or foreign laws or regulations. You shall comply with any applicable export control laws and regulations promulgated and administered by the governments of any countries asserting jurisdiction over the parties or transactions.
12. It is the responsibility of the buyer or distributor of Renesas Electronics products, or any other party who distributes, disposes of, or otherwise sells or transfers the product to a third party, to notify such third party in advance of the contents and conditions set forth in this document.
13. This document shall not be reprinted, reproduced or duplicated in any form, in whole or in part, without prior written consent of Renesas Electronics.
14. Please contact a Renesas Electronics sales office if you have any questions regarding the information contained in this document or Renesas Electronics products.

(Note1) “Renesas Electronics” as used in this document means Renesas Electronics Corporation and also includes its directly or indirectly controlled subsidiaries.
(Note2) “Renesas Electronics product(s)” means any product developed or manufactured by or for Renesas Electronics.

(Rev.5.0-1 October 2020)

Corporate Headquarters

TOYOSU FORESIA, 3-2-24 Toyosu,
Koto-ku, Tokyo 135-0061, Japan
www.renesas.com

Trademarks

Renesas and the Renesas logo are trademarks of Renesas Electronics Corporation. All trademarks and registered trademarks are the property of their respective owners.

Contact information

For further information on a product, technology, the most up-to-date version of a document, or your nearest sales office, please visit: www.renesas.com/contact/.

© 2025 Renesas Electronics Corporation. All rights reserved.

Downloaded from Arrow.com.

General Precautions in the Handling of Microprocessing Unit and Microcontroller Unit Products

The following usage notes are applicable to all Microprocessing unit and Microcontroller unit products from Renesas. For detailed usage notes on the products covered by this document, refer to the relevant sections of the document as well as any technical updates that have been issued for the products.

1. Precaution against Electrostatic Discharge (ESD)

   A strong electrical field, when exposed to a CMOS device, can cause destruction of the gate oxide and ultimately degrade the device operation. Steps must be taken to stop the generation of static electricity as much as possible, and quickly dissipate it when it occurs. Environmental control must be adequate. When it is dry, a humidifier should be used. This is recommended to avoid using insulators that can easily build up static electricity. Semiconductor devices must be stored and transported in an anti-static container, static shielding bag or conductive material. All test and measurement tools including work benches and floors must be grounded. The operator must also be grounded using a wrist strap. Semiconductor devices must not be touched with bare hands. Similar precautions must be taken for printed circuit boards with mounted semiconductor devices.
2. Processing at power-on

   The state of the product is undefined at the time when power is supplied. The states of internal circuits in the LSI are indeterminate and the states of register settings and pins are undefined at the time when power is supplied. In a finished product where the reset signal is applied to the external reset pin, the states of pins are not guaranteed from the time when power is supplied until the reset process is completed. In a similar way, the states of pins in a product that is reset by an on-chip power-on reset function are not guaranteed from the time when power is supplied until the power reaches the level at which resetting is specified.
3. Input of signal during power-off state

   Do not input signals or an I/O pull-up power supply while the device is powered off. The current injection that results from input of such a signal or I/O pull-up power supply may cause malfunction and the abnormal current that passes in the device at this time may cause degradation of internal elements. Follow the guideline for input signal during power-off state as described in your product documentation.
4. Handling of unused pins

   Handle unused pins in accordance with the directions given under handling of unused pins in the manual. The input pins of CMOS products are generally in the high-impedance state. In operation with an unused pin in the open-circuit state, extra electromagnetic noise is induced in the vicinity of the LSI, an associated shoot-through current flows internally, and malfunctions occur due to the false recognition of the pin state as an input signal become possible.
5. Clock signals

   After applying a reset, only release the reset line after the operating clock signal becomes stable. When switching the clock signal during program execution, wait until the target clock signal is stabilized. When the clock signal is generated with an external resonator or from an external oscillator during a reset, ensure that the reset line is only released after full stabilization of the clock signal. Additionally, when switching to a clock signal produced with an external resonator or by an external oscillator while program execution is in progress, wait until the target clock signal is stable.
6. Voltage application waveform at input pin

   Waveform distortion due to input noise or a reflected wave may cause malfunction. If the input of the CMOS device stays in the area between V_{IL} (Max.) and V_{IH} (Min.) due to noise, for example, the device may malfunction. Take care to prevent chattering noise from entering the device when the input level is fixed, and also in the transition period when the input level passes through the area between V_{IL} (Max.) and V_{IH} (Min.).
7. Prohibition of access to reserved addresses

   Access to reserved addresses is prohibited. The reserved addresses are provided for possible future expansion of functions. Do not access these addresses as the correct operation of the LSI is not guaranteed.
8. Differences between products

   Before changing from one product to another, for example to a product with a different part number, confirm that the change will not lead to problems. The characteristics of a microprocessing unit or microcontroller unit products in the same group but having a different part number might differ in terms of internal memory capacity, layout pattern, and other factors, which can affect the ranges of electrical characteristics, such as characteristic values, operating margins, immunity to noise, and amount of radiated noise. When changing to a product with a different part number, implement a system-evaluation test for the given product.

Downloaded from Arrow.com.

Renesas EK-RA8P1 Disclaimer

By using this EK-RA8P1, the User accepts the following terms, which are in addition to, and control in the event of disagreement, with Renesas' General Terms and Conditions available at renesas.com/legal-notices.

The EK-RA8P1 is not guaranteed to be error free, and the entire risk as to the results and performance of the EK-RA8P1 is assumed by the User. The EK-RA8P1 is provided by Renesas on an "as is" basis without warranty of any kind whether express or implied, including but not limited to the implied warranties of good workmanship, fitness for a particular purpose, title, merchantability, and non-infringement of intellectual property rights. Renesas expressly disclaims any implied warranty.

Renesas does not consider the EK-RA8P1 to be a finished product and therefore the EK-RA8P1 may not comply with some requirements applicable to finished products, including, but not limited to recycling, restricted substances and electromagnetic compatibility regulations. Refer to Certifications section, for information about certifications and compliance information for the EK-RA8P1. It is the kit User's responsibility to make sure the kit meets any local requirements applicable to their region.

Renesas or its affiliates shall in no event be liable for any loss of profit, loss of data, loss of contract, loss of business, damage to reputation or goodwill, any economic loss, any reprogramming or recall costs (whether the foregoing losses are direct or indirect) nor shall Renesas or its affiliates be liable for any other direct or indirect special, incidental or consequential damages arising out of or in relation to the use of this EK-RA8P1, even if Renesas or its affiliates have been advised of the possibility of such damages.

Renesas has used reasonable care in preparing the information included in this document, but Renesas does not warrant that such information is error free nor does Renesas guarantee an exact match for every application or parameter to part numbers designated by other vendors listed herein. The information provided in this document is intended solely to enable the use of Renesas products. No express or implied license to any intellectual property right is granted by this document or in connection with the sale of Renesas products. Renesas reserves the right to make changes to specifications and product descriptions at any time without notice. Renesas assumes no liability for any damages incurred by you resulting from errors in or omissions from the information included herein. Renesas cannot verify, and assumes no liability for, the accuracy of information available on another company's website.

Precautions

This Evaluation Kit is only intended for use in a laboratory environment under ambient temperature and humidity conditions. A safe separation distance should be used between this and any sensitive equipment. Its use outside the laboratory, classroom, study area, or similar such area invalidates conformity with the protection requirements of the Electromagnetic Compatibility Directive and could lead to prosecution.

The product generates, uses, and can radiate radio frequency energy and may cause harmful interference to radio communications. There is no guarantee that interference will not occur in a particular installation. If this equipment causes harmful interference to radio or television reception, which can be determined by turning the equipment off or on, you are encouraged to try to correct the interference by one or more of the following measures:

• Ensure attached cables do not lie across the equipment.

• Reorient the receiving antenna.

• Increase the distance between the equipment and the receiver.

• Connect the equipment into an outlet on a circuit different from that which the receiver is connected.

• Power down the equipment when not in use.

• Consult the dealer or an experienced radio/TV technician for help.

Note: It is recommended that wherever possible shielded interface cables are used.

The product is potentially susceptible to certain EMC phenomena. To mitigate against them it is recommended that the following measures be undertaken:

• The user is advised that mobile phones should not be used within 10 m of the product when in use.

• The user is advised to take ESD precautions when handling the equipment.

The Evaluation Kit does not represent an ideal reference design for an end product and does not fulfill the regulatory standards for an end product.

Downloaded from Arrow.com.

Renesas RA Family

EK-RA8P1 v1

Contents

1. Kit Overview 5
1.1 Assumptions and Advisory Notes 8
2. Kit Contents 9
3. Ordering Information 10
4. Hardware Architecture and Default Configuration 10
4.1 Kit Architecture 10
4.2 System Block Diagram 12
4.3 Jumper Configuration 13
4.3.1 Copper Jumpers 13
4.3.2 Traditional Pin Header Jumpers 13
4.3.3 Default Jumper Configuration 14
4.3.4 Switch Configuration 16
5. System Control and Ecosystem Access Area 18
5.1 Power 19
5.1.1 Power Supply Options 19
5.1.2 Power Supply Considerations 20
5.1.3 Power-up Behavior 20
5.1.4 USB HS and USB FS Supply Voltage 21
5.2 Debug and Trace 21
5.2.1 Debug On-Board 21
5.2.2 Debug In 23
5.2.3 Debug Out 24
5.2.4 Debug Serial 24
5.3 Ecosystem 25
5.3.1 Seeed Grove® Connections 25
5.3.2 SparkFun® Qwiic® Connections 25
5.3.3 Digilent Pmod™ Connectors 26
5.3.4 Arduino™ Connector 28
5.3.5 MikroElektronika mikroBUS™ Connector 29
5.4 Connectivity 30
5.4.1 USB Full Speed 30
5.4.2 I3C 31
5.5 Miscellaneous 31

Downloaded from Arrow.com.

5.5.1 User and Status LEDs 31
5.5.2 User and Reset Switches 32
5.5.3 MCU Boot Mode 32

6. Special Feature Access Area 33
6.1 Ethernet 33
6.2 USB High Speed 34
6.3 Octo-SPI Flash 35
6.3.1 OSPI Flash Read / Write Byte Order 36
6.4 SDRAM 36
6.5 SPH069 PDM MEMS Microphones 38
6.6 DA7212 Audio CODEC 38

7. MCU Native Pin Access Area 40
7.1 Breakout Pin Headers (not populated) 40
7.2 MCU and USB Current Measurement 40

8. Expansion Boards 42
8.1 Parallel Graphics Expansion Board 1 42
8.1.1 Connecting the Parallel Graphics Expansion Board 1 to the EK-RA8P1 Board 44
8.2 MIPI Graphics Expansion Board 1 45
8.2.1 Connecting the MIPI Graphics Expansion Board 1 to the EK-RA8P1 Board 46
8.3 Camera Expansion Board 47
8.3.1 Connecting the Camera Expansion Board to the EK-RA8P1 Board 50

9. Certifications 51
9.1 EMC/EMI Standards 51
9.2 Material Selection, Waste, Recycling and Disposal Standards 51
9.3 Safety Standards 52

10. Design and Manufacturing Information 53

11. Website and Support 53

Revision History 54

Figures

Figure 1. EK-RA8P1 Board Top Side 6
Figure 2. EK-RA8P1 Board Bottom Side 7
Figure 3. EK-RA8P1 Kit Contents 9
Figure 4. EK-RA8P1 Board Functional Area Definitions 11
Figure 5. EK-RA8P1 Board Block Diagram 12
Figure 6. Copper Jumpers 13
Figure 7. System Control and Ecosystem Access Area 18

Downloaded from Arrow.com.

Figure 8. Power Supply Options 19
Figure 9. +5 V Test Point Location 20
Figure 10. VBATT Supply (J36) Location 20
Figure 11. EK-RA8P1 Debug Interface 23
Figure 12. Seeed Grove® and SparkFun® Qwiic® Connector Footprints 26
Figure 13. Pmod 1 Connector 27
Figure 14. Pmod 2 Connector 27
Figure 15. Arduino Uno Connectors 29
Figure 16. mikroBUS™ Connector 29
Figure 17. USB Full Speed Connector 30
Figure 18. User LEDs 31
Figure 19. Power LED 31
Figure 20. Debug LED 32
Figure 21. Ethernet PHY LEDs 32
Figure 22. Reset and User Switches 32
Figure 23. Boot Mode 32
Figure 24. Special Feature Access Area 33
Figure 25. Ethernet Connector 34
Figure 26. USB High Speed Connector 35
Figure 27. Octo-SPI Flash (labelled as “OCTASPI” on silkscreen text) 36
Figure 28. Octo-SPI Flash Read Write Byte Order in DOPI mode 36
Figure 29. SDRAM 38
Figure 30. MEMS Microphones 38
Figure 31. Audio CODEC Disconnection Links (J41) 38
Figure 32. Audio CODEC (U14) and Speaker Connector (J33) and Pin Header (J38) 39
Figure 33. Native Pin Access Area 40
Figure 34. RA USB Current Measurement Circuit 41
Figure 35. RA +3.3 V Current Measurement Circuit 41
Figure 36. RA MCU and USB Current Measurement 41
Figure 37. Parallel Graphics Expansion Port 43
Figure 38. Parallel Graphics Expansion Board 1 connected to EK-RA8P1 Board 44
Figure 39. MIPI Graphics Expansion Port 45
Figure 40. MIPI Graphics Expansion Board 1 connected to the EK-RA8P1 46
Figure 41. Camera Expansion Board Port 50
Figure 42. Camera Expansion Board connected to the EK-RA8P1 50

Tables

Table 1. Kit Architecture 10
Table 2. Default Jumper Configuration 14
Table 3. Switch Configuration Definitions (SW4) 16

Downloaded from Arrow.com.

Table 4. Permitted Switch Configuration (SW4) 17
Table 5. Debug Modes 21
Table 6. Jumper Connection Summary for Different Debug Modes 21
Table 7. Debug USB Port Assignments....21
Table 8. Debug On-Board Jumper Configuration 22
Table 9. Debug In Mode Jumper Configuration....23
Table 10. JTAG/SWO/SWD/ETM Port Assignments 23
Table 11. JTAG/SWO/SWD Port Assignments....24
Table 12. Debug Out Jumper Configuration 24
Table 13. Debug Serial Port Assignment....24
Table 14. Grove 1 Port Assignments 25
Table 15. Grove 2 Port Assignments 25
Table 16. Qwiic® Port Assignments 25
Table 17. Pmod 1 Port Assignments....26
Table 18. Pmod 1 Switch Configuration....27
Table 19. Pmod 2 Port Assignments....27
Table 20. Arduino Uno Port Assignments....28
Table 21. mikroBUS™ Port Assignments 29
Table 22. USB Full Speed Port Assignments....30
Table 23. I^2C/I3C Pullup Configuration 31
Table 24. EK-RA8P1 Board LED Functions....31
Table 25. EK-RA8P1 Board Switches....32
Table 26. Ethernet PHY Connections 33
Table 27. Ethernet Components 34
Table 28. USB High Speed Port Assignments....34
Table 29. Octo-SPI Flash Assignments 35
Table 30. SDRAM Assignments....36
Table 31. SPH0649 Port Assignments....38
Table 32. Audio CODEC Port Pin Assignments....39
Table 33. Parallel Graphics Expansion Port Assignments 42
Table 34. MIPI Graphics Expansion Port Assignments....45
Table 35. Camera Expansion Port Assignments in Parallel mode (SW4-6 ON) 48
Table 36. Camera Expansion Port Assignments in MIPI mode (SW4-6 OFF) 49
Table 37. EK-RA8P1 Board Design Package Contents....53
Table 38. Parallel Graphics Expansion Board 1 Design Package Contents 53
Table 39. MIPI Graphics Expansion Board 1 Design Package Contents....53

Downloaded from Arrow.com.

1. Kit Overview

The EK-RA8P1, an Evaluation Kit for RA8P1 MCU Group, enables users to seamlessly evaluate the features of the RA8P1 MCU group and develop embedded systems applications using Flexible Software Package (FSP) and e^2 studio IDE. The users can use the rich on-board features along with their choice of popular ecosystems add-ons to bring their big ideas to life.

The EK-RA8P1 kit consists of three boards: the EK-RA8P1 board featuring the RA8P1 MCU, Parallel Graphics Expansion Board 1, and Camera Expansion Board.

The key features of the EK-RA8P1 board are categorized in three groups (consistent with the architecture of the kit, with a few exceptions) as follows:

MCU Native Pin Access

- R7KA8P1KFLCAC MCU (referred to as RA MCU)
  - 1 GHz, Arm® Cortex®-M85 core
  - 250 MHz, Arm® Cortex®-M33 core
  - 1 MB MRAM, 2 MB SRAM with ECC
  - 289 pins, BGA package
- Native pin access through 2 x 20-pin, and 2 x 40-pin headers (not populated)
- Parallel Graphics Expansion Port
- Camera Expansion Port (present at the underside of the EK-RA8P1 board)
- MIPI Graphics Expansion Port (present at the underside of the EK-RA8P1 board)
- MCU current measurement points for precision current consumption measurement
- Multiple clock sources – RA MCU oscillator and sub-clock oscillator crystals, providing precision 24.000 MHz and 32,768 Hz reference clocks. Additional clocks are available internally to the RA MCU.

System Control and Ecosystem Access

- Four 5 V input sources
  - USB (Debug, Full Speed, High Speed)
  - External power supply (using surface mount clamp test points and power input vias)
- Three Debug modes
  - Debug on-board (SWD and JTAG)
  - Debug in (ETM, SWD, SWO, and JTAG)
  - Debug out (SWD, SWO, and JTAG)
- User LEDs, Status LEDs and Switches
  - Three User LEDs (red, blue, green)
  - Power LED (white) indicating availability of regulated power.
  - Debug LED (yellow) indicating the debug connection.
  - Ethernet LEDs (amber, yellow, green)
  - Two User Switches, One Reset Switch
- Five most popular ecosystems expansions
  - Two Seeed Grove® system (I^{2}C/I3C/Analog) connectors (not populated)
  - SparkFun Qwiic® connector (not populated)
  - Two Digilent Pmod™ (SPI, UART and I^{2}C) connectors
  - Arduino™ (Uno R3) connector
  - MikroElektronika mikroBUS™ connector (not populated)
- USB Full Speed Host and Device (USB-C connector)
- MCU boot configuration jumper

Special Feature Access

- USB High Speed Host and Device (USB-C connector)
- Ethernet (RJ45 RGMII interface)
- 64 MB (512 Mb) External Octo-SPI Flash (present in the MCU Native Pin Access area)
- 64 MB (512 Mb) SDRAM (present in the MCU Native Pin Access area)
- PDM MEMS Microphones (present at the underside of the EK-RA8P1 board)
- Audio CODEC with speaker out connections
- Configuration switches

Downloaded from Arrow.com.

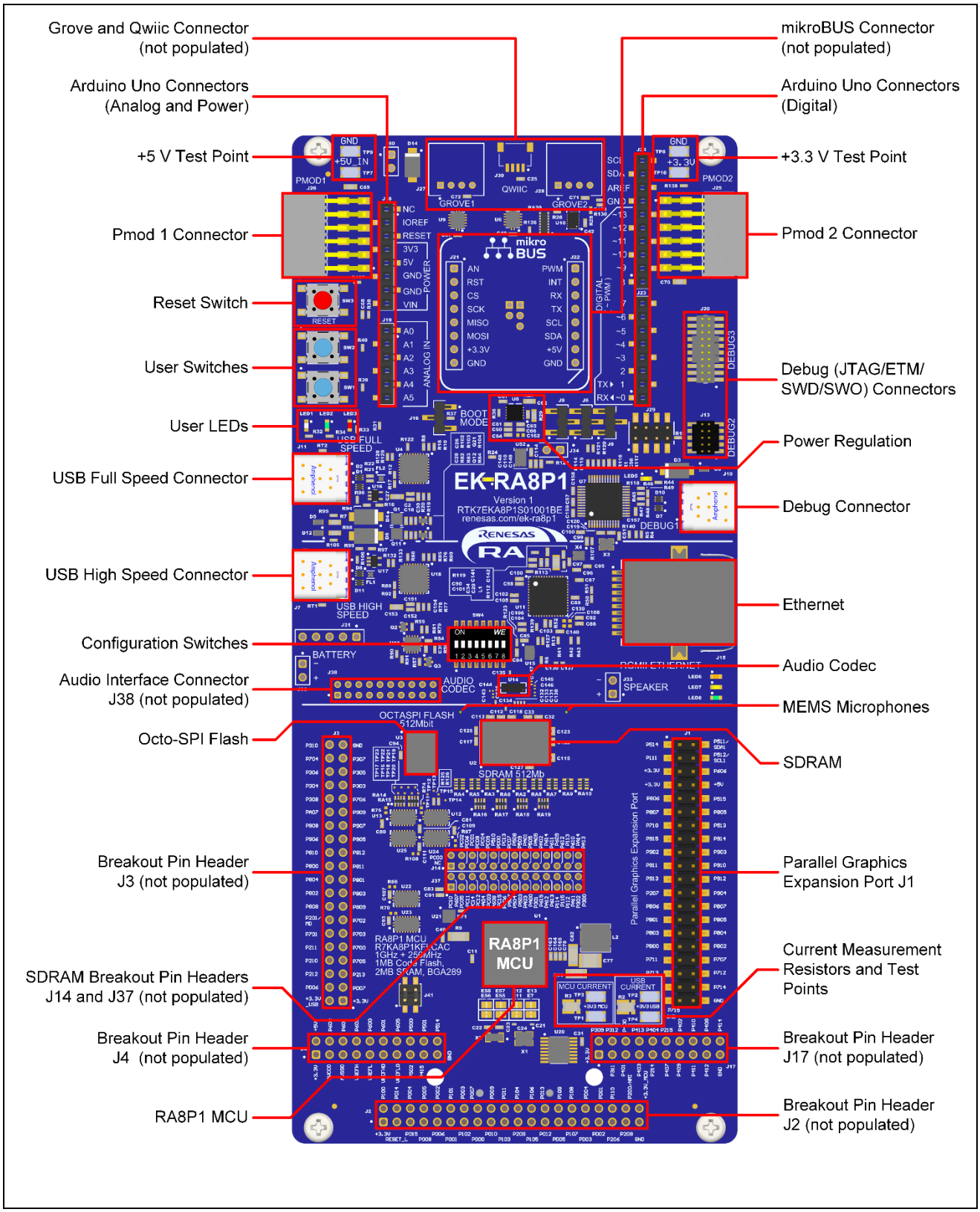

Figure 1. EK-RA8P1 Board Top Side

Downloaded from Arrow.com.

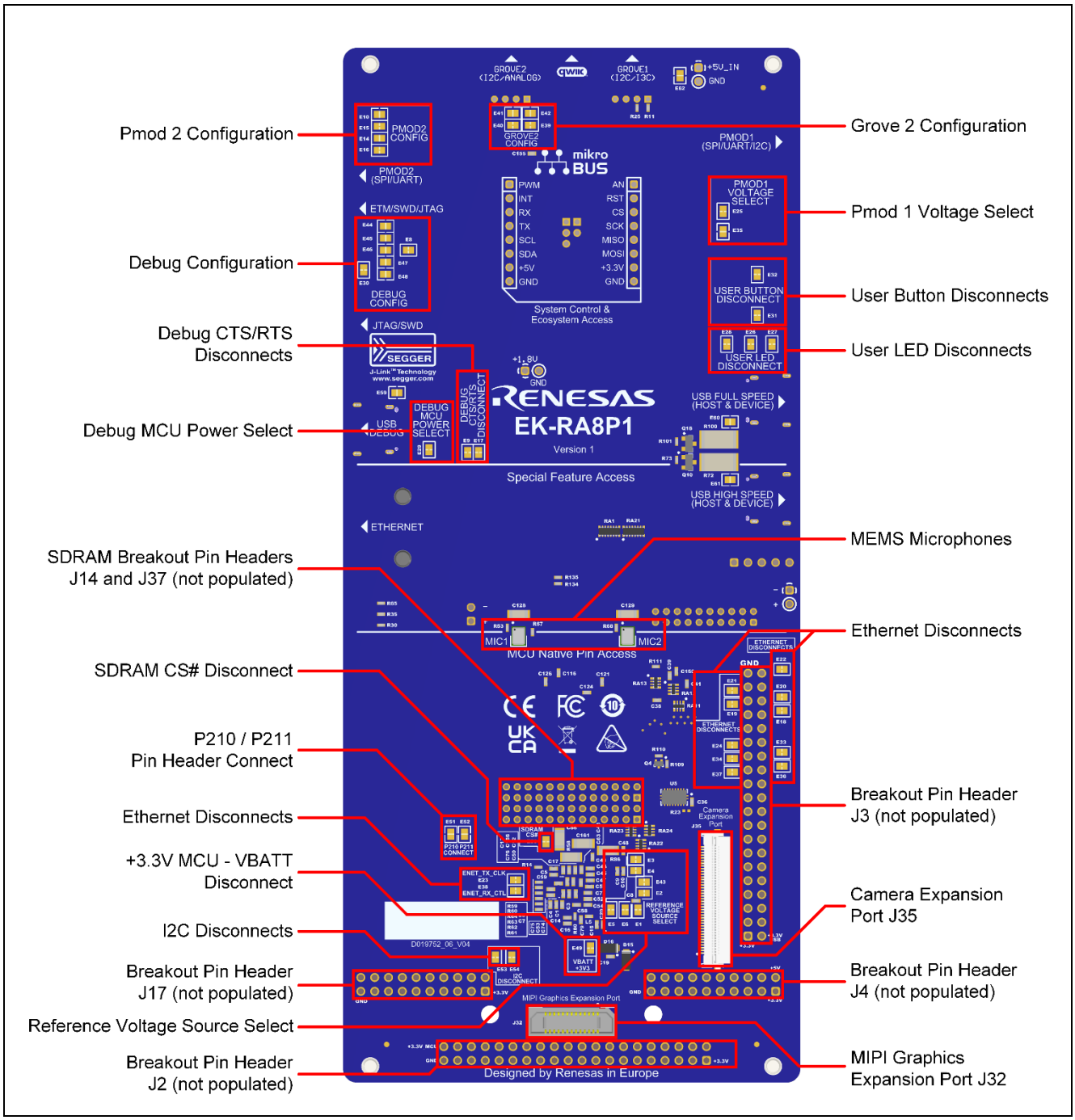

Figure 2. EK-RA8P1 Board Bottom Side

Downloaded from Arrow.com.

1.1 Assumptions and Advisory Notes

1. It is assumed that the user has a basic understanding of microcontrollers and embedded systems hardware.
2. It is recommended that the user refers to the *EK-RA8P1 Quick Start Guide* to get acquainted with the kit and the Quick Start example project that EK-RA8P1 board comes pre-programmed with.
3. Flexible Software Package (FSP) and Integrated Development Environment (IDE) such as e^2 studio are required to develop embedded applications on EK-RA8P1 kit.
4. Instructions to download and install software, import example projects, build them and program the EK-RA8P1 board are provided in the quick start guide.
5. The MCU fitted to the EK board may not contain the latest version of the on-chip boot firmware.

Downloaded from Arrow.com.

2. Kit Contents

The following components are included in the kit:

1. EK-RA8P1 v1 board
2. Parallel Graphics Expansion Board 1
3. Camera FFC cable
4. Camera Expansion Board
5. Display mounting hardware (spacers and fixing screws)

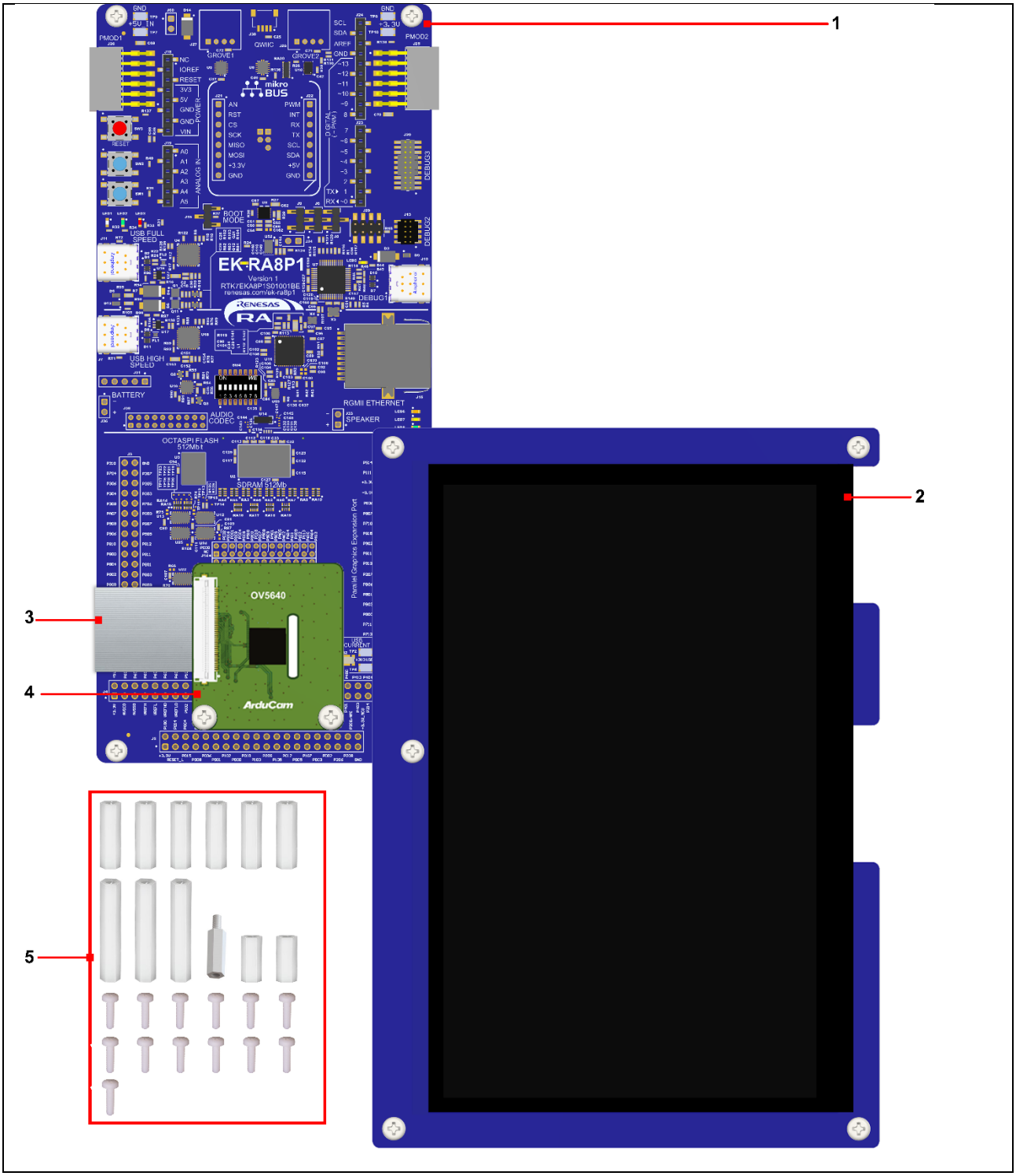

Figure 3. EK-RA8P1 Kit Contents

Downloaded from Arrow.com.

3. Ordering Information

- EK-RA8P1 v1 kit orderable part number: RTK7EKA8P1S01001BE

Notes: 1. The underlined character in the part number represents the kit version.
2. Parallel Graphics Expansion Board 1 part number: RTKLCDPAR1S00001BE
3. MIPI Graphics Expansion Board 1 part number: RTKAPPLCDMS01001BE
4. Camera Expansion Board part number (Arducam): CU450_OV5640

- Dimensions
  - EK-RA8P1 board dimensions: 84 mm (width) x 190 mm (length)
  - Parallel Graphics Expansion Board 1 dimensions: 120 mm (width) x 185mm (length)
  - MIPI Graphics Expansion Board 1 dimensions: 120 mm (width) x 90 mm (length)
  - Camera Expansion Board dimensions: 36 mm (width) x 40 mm (length)

4. Hardware Architecture and Default Configuration

4.1 Kit Architecture

The EK-RA8P1 board is designed with three sections or areas to help shorten the learning curve of the users and maximize the design and knowledge reuse among similar kits. The contents of these three areas are conceptually standardized among similar kits.

Table 1. Kit Architecture

Kit area	Area features	Area present on all similar kits	Functionality is:
MCU Native Pin Access Area	RA MCU, breakout pin headers for all MCU I/O and Power, Current measurement, Octo-SPI Flash, SDRAM, MIPI Graphics Expansion Port, Camera Expansion Port, and Parallel Graphics Expansion Port	Yes	MCU dependent
Special Feature Access Area	Configuration Switches MCU Special Features: Ethernet, USB High Speed, Audio Codec, MEMS Microphones	No	MCU dependent
System Control and Ecosystem Access Area	Ecosystem connectors, Power Regulator, Debug MCU, User LEDs and Switches, Reset Switch, USB Full Speed, and Boot configuration	Yes	Same or similar across similar kits

Note: The Octo-SPI Flash and SDRAM are among the Special Feature Access features. Normally, they would be in the Special Feature Access Area, however, to optimize the layout, routing, and performance, they have been placed in the MCU Native Pin Access area.

Downloaded from Arrow.com.

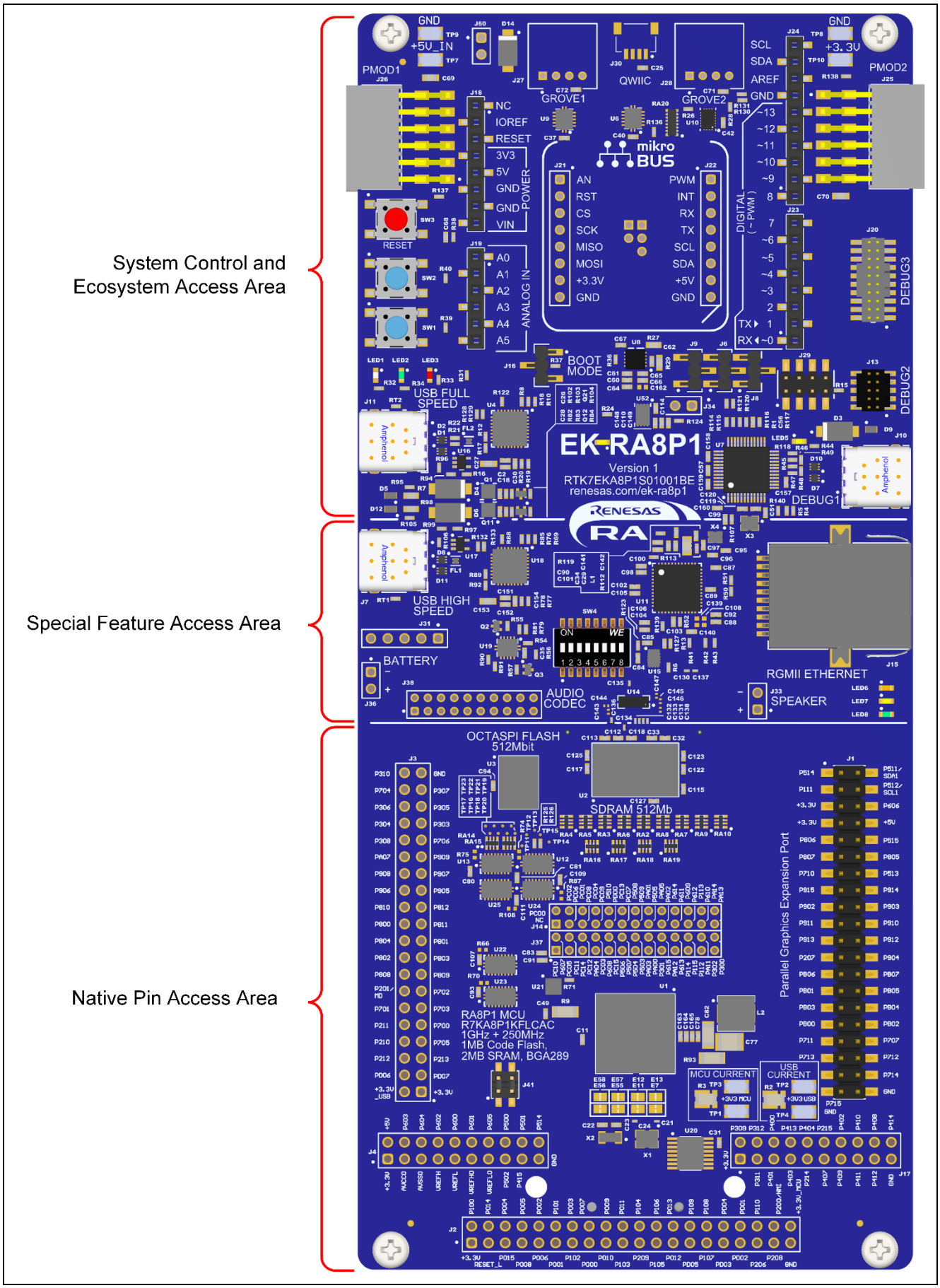

Figure 4. EK-RA8P1 Board Functional Area Definitions

Downloaded from Arrow.com.

4.2 System Block Diagram

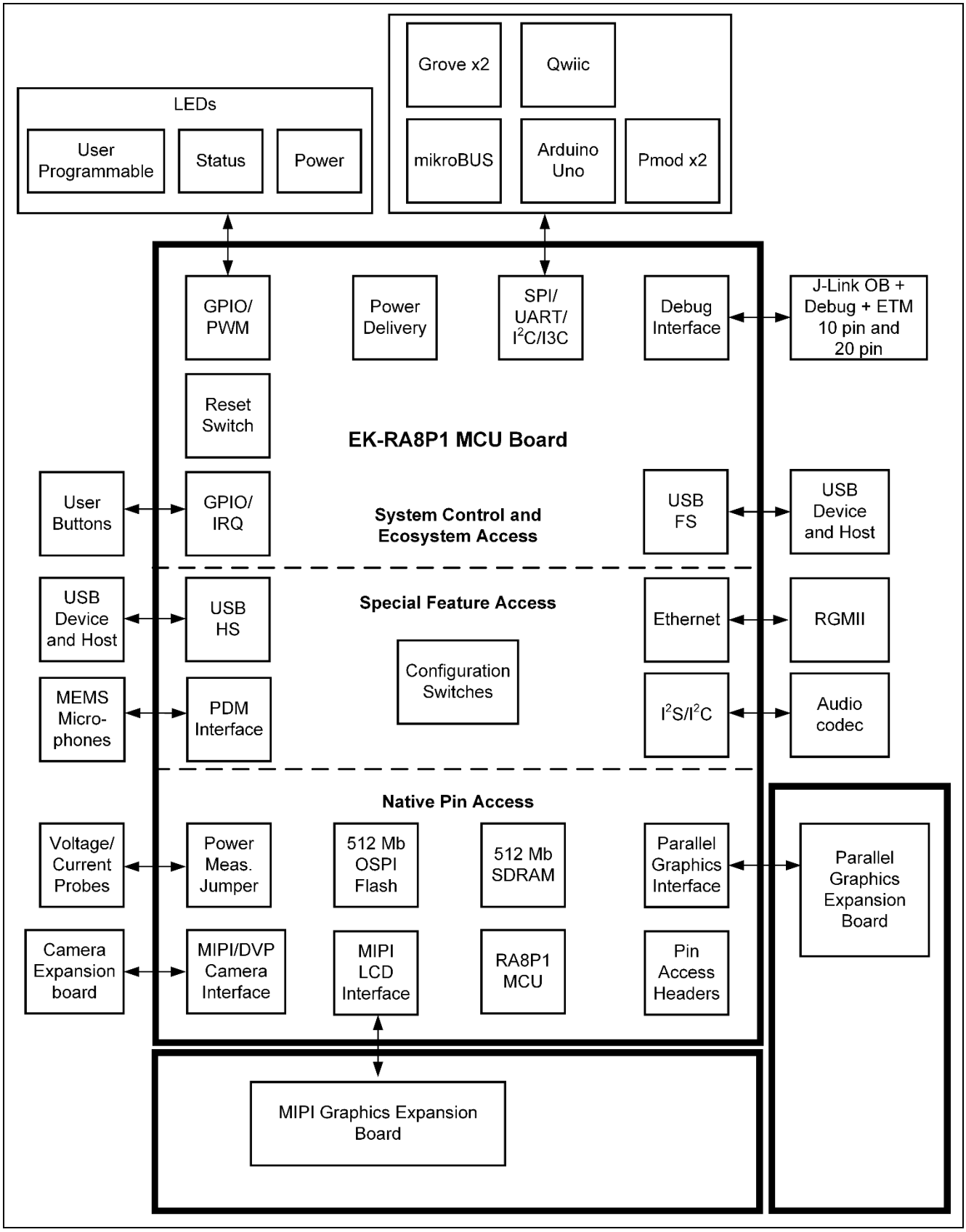

Figure 5. EK-RA8P1 Board Block Diagram

Downloaded from Arrow.com.

4.3 Jumper Configuration

Two types of jumpers are provided on the EK-RA8P1 board.

1. Copper jumpers (trace-cut type and solder bridge type)
2. Traditional pin header jumpers

The following sections describe each type and their default configuration.

4.3.1 Copper Jumpers

Copper jumpers are of two types, designated **trace-cut** and **solder-bridge**.

A **trace-cut jumper** is provided with a narrow copper trace connecting its pads. The silk screen overlay printing around a trace-cut jumper is a solid box. To isolate the pads, cut the trace between pads adjacent to each pad, then remove the connecting copper foil either mechanically or with the assistance of heat. Once the etched copper trace is removed, the trace-cut jumper is turned into a solder-bridge jumper for any later changes.

A **solder-bridge** jumper is provided with two isolated pads that may be joined together by one of three methods:

- Solder may be applied to both pads to develop a bulge on each and the bulges joined by touching a soldering iron across the two pads.
- A small wire may be placed across the two pads and soldered in place.
- A SMT resistor, size 0805, 0603, or 0402, may be placed across the two pads and soldered in place. A zero-ohm resistor shorts the pads together.

For any copper jumper, the connection is considered **closed** if there is an electrical connection between the pads (default for trace-cut jumpers.) The connection is considered **open** if there is no electrical connection between the pads (default for the solder-bridge jumpers.)

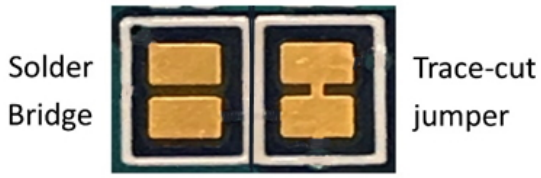

Figure 6. Copper Jumpers

4.3.2 Traditional Pin Header Jumpers

These jumpers are traditional small pitch jumpers that require an external shunt to open/close them. The traditional pin jumpers on the EK-RA8P1 board are 2 mm pitch headers and require compatible 2 mm shunt jumpers.

Downloaded from Arrow.com.

4.3.3 Default Jumper Configuration

The following table describes the default configuration for each jumper on the EK-RA8P1 board. This includes copper jumpers (Ex designation) and traditional pin jumpers (Jx designation).

The Circuit Group for each jumper is the designation found in the board schematic (available in the Design Package). Functional details for many of the listed jumpers may be found in sections associated with each functional area of the kits.

Table 2. Default Jumper Configuration

Location	Circuit Group	Default Position	Function
J6	J-Link OB	Jumper on pins 2-3	Configures J-Link OB connection to MCU mode
J8	J-Link OB	Jumper on pins 1-2	Configures the MCU for normal operation
J9	J-Link OB	Jumper on pins 2-3	Configures JLOB_RESET_L for on-board debugger mode
J29	J-Link OB	Jumper on pins 1-2 Jumper on pins 3-4 Jumper on pins 5-6 Jumper on pins 7-8	Connects the J-Link OB debugger to the RA MCU
J16	MCU Boot Mode	Jumper on pins 2-3	Configures the MCU for normal boot mode
J41	Audio CODEC	Jumper on pins 1-2 Jumper on pins 3-4	Connects U14 pin C7 (DATOUT) to P406 Connects U14 pin C5 (DATIN) to P405
E1	MCU Power	Closed	Connects VREFL to GND
E2	MCU Power	Closed	Connects VREFH to +3.3 V
E3	MCU Power	Closed	Connects AVCC0 to +3.3 V
E4	MCU Power	Closed	Connects AVSS0 to GND
E5	MCU Power	Closed	Connects VREFL0 to GND
E6	MCU Power	Closed	Connects VREFH0 to +3.3 V
E49	MCU Power	Closed	Connects VBATT to +3.3 V (P3V3_MCU)
E7	MCU Clock	Closed	Connects P212/EXTAL to 24 MHz crystal
E11	MCU Clock	Closed	Connects P213/XTAL to 24 MHz crystal
E12	MCU Clock	Open	Connects P213/XTAL pin to J3 pin 5
E13	MCU Clock	Open	Connects P212/EXTAL pin to J3 pin 6
E55	MCU Clock	Closed	Connects XCIN/P215 to 32.768 KHz crystal
E56	MCU Clock	Closed	Connects XCOUT/P214 to 32.768 KHz crystal
E57	MCU Clock	Open	Connects XCIN/P215 to J17 pin 12
E58	MCU Clock	Open	Connects XCOUT/P214 to J17 pin 9
E9	Debug	Closed	Connects PD04 (CTS_RTS) to Debug MCU port P408
E17	Debug	Closed	Connects PD05 (CTS) to Debug MCU port P409
E44	Debug	Open	Connects J20-20 to P304 (TDATA3)
E45	Debug	Open	Connects J20-18 to P305 (TDATA2)
E46	Debug	Open	Connects J20-16 to P306 (TDATA1)
E47	Debug	Open	Connects J20-14 to P307 (TDATA0)
E48	Debug	Open	Connects J20-12 to P308 (TCLK)
E51	Debug	Open	Connects P210 (SWDIO) to J3 pin 8
E52	Debug	Open	Connects P211 (SWCLK) to J3 pin 10
E30	JTAG	Closed	Connects the JTAG GND Detect pin on J20 and J13 to GND
E8	JTAG	Closed	Connects JTAG TDATA1 to JLOB_TRST
E29	Debug MCU Power	Closed	Connects the Debug MCU power to +3.3 V
E26	User LED	Closed	Connects P303 to User LED2
E27	User LED	Closed	Connects P600 to User LED1

Downloaded from Arrow.com.

Location	Circuit Group	Default Position	Function
E28	User LED	Closed	Connects PA07 to User LED3
E31	User Switch	Closed	Connects P009 to User Switch SW1
E32	User Switch	Closed	Connects P008 to User Switch SW2
E43	Arduino	Closed	Connects ARDUINO_AREF to VREFH
E25	Pmod 1	Closed	Connects +3.3 V to Pmod 1 pin 6 and 12
E35	Pmod 1	Open	Connects +5.0 V to Pmod 1 pin 6 and 12
E10	Pmod 2	Open	Connects P605 (CTS0) to Pmod 2 pin 1
E14	Pmod 2	Open	Connects P604 (RTS0) to Pmod 2 pin 4
E15	Pmod 2	Closed	Connects P604 (SSLB0) to Pmod 2 pin 1
E16	Pmod 2	Closed	Connects P601 (RSPCKB) to Pmod 2 pin 4
E39	Grove 2	Closed	Connects P512 (I^2C SCL1) to Grove 2 pin 1
E40	Grove 2	Closed	Connects P511 (I^2C SDA1) to Grove 2 pin 2
E41	Grove 2	Open	Connects P005 (AN005) to Grove 2 pin 2
E42	Grove 2	Open	Connects P002 (AN002) to Grove 2 pin 1
E18	Ethernet	Closed	Connects P304 to ENET_TXD3
E19	Ethernet	Closed	Connects P305 to ENET_TXD2
E20	Ethernet	Closed	Connects P306 to ENET_TXD1
E21	Ethernet	Closed	Connects P307 to ENET_TXD0
E22	Ethernet	Closed	Connects P310 to ENET_TX_CTL
E23	Ethernet	Closed	Connects P309 to ENET_TX_CLK
E24	Ethernet	Closed	Connects P909 to ENET_RXD3
E33	Ethernet	Closed	Connects P908 to ENET_RXD2
E34	Ethernet	Closed	Connects P907 to ENET_RXD1
E36	Ethernet	Closed	Connects P906 to ENET_RXD0
E37	Ethernet	Closed	Connects P905 to ENET_RX_CLK
E38	Ethernet	Closed	Connects P206 to ENET_RX_CTL
E50	SDRAM	Closed	Connects P813 to SDRAM_CS#
E53	I^2C/I3C	Closed	Connects SDA to bus switch for I^2C/I3C selection
E54	I^2C/I3C	Closed	Connects SCL to bus switch for I^2C/I3C selection
E59	Power	Open	Shorts 5V USB Debug diode D3 to eliminate the forward voltage drop
E60	Power	Open	Shorts 5V USB Full Speed diode D4 to eliminate the forward voltage drop
E61	Power	Open	Shorts 5V USB High Speed diode D6 to eliminate the forward voltage drop
E62	Power	Open	Shorts 5V EXT diode D14 to eliminate the forward voltage drop

Downloaded from Arrow.com.

4.3.4 Switch Configuration

The EK-RA8P1 features an I²C I/O Port Expander (PI4IOE5V6408) at U15 which has the I²C address 0x43. The port expander is connected to the configuration switches SW4 and allows the settings to be read (when the I/O expander port is set to input) or overridden (when the I/O expander port is set to output) by software.

The following table describes the function and default configuration for each switch that selects the operational peripheral pins on the EK-RA8P1 board.

The circuit group for each switch is the designation found in the board schematic (available in the Design Package). Functional details for many of the listed switches may be found in sections associated with each functional area of the kits.

Table 3. Switch Configuration Definitions (SW4)

Switch	Switch Definition	Position (Default)	Function	Conflict
SW4-1	Pmod 1 Mode Select 1	**OFF**	Please see Table 18	Please see Table 18
		ON		
SW4-2	Pmod 1 Mode Select 2	**OFF**		
		ON		
SW4-3	Octo-SPI Select	**OFF**	Octo-SPI Active	Arduino, mikroBUS and Pmod 1 (SPI, UART)
		ON	Octo-SPI Inactive	-
SW4-4	Arduino Select	**OFF**	Arduino and mikroBUS Connectors Inactive	-
		ON	Arduino and mikroBUS Connectors Active	Octo-SPI
SW4-5	I²C/I3C Select	**OFF**	I²C Active	-
		ON	I3C Active	Parallel Camera
SW4-6	Camera and Display Mode Select	**OFF**	Parallel Display and MIPI Camera Active	-
		ON	MIPI Display and Parallel Camera Active	I3C
SW4-7	USBFS Role Toggle	**OFF**	Toggles USBFS between Host and Device mode	-
		ON		-
SW4-8	USBHS Role Toggle	**OFF**	Toggles USBHS between Host and Device mode	-
		ON		-

Downloaded from Arrow.com.

Table 4. Permitted Switch Configuration (SW4)

IMPORTANT: Ensure that invalid switch configuration is not made to avoid potential failures

X: Indicates invalid switch configuration, all other configurations are valid

SWITCH SW4		SW4-1 Pmod1		SW4-2 Pmod1		SW4-3 Octo-SPI (OFF is Active)		SW4-4 Arduino / mikroBUS		SW4-5 I3C		SW4-6 MIPI		SW4-7 USBFS		SW4-8 USBHS	
		OFF	ON	OFF	ON	OFF	ON	OFF	ON	OFF	ON	OFF	ON	OFF	ON	OFF	ON
SW4-1 Pmod1	OFF																
	ON				X												
SW4-2 Pmod1	OFF					X											
	ON																
SW4-3 Octo-SPI (OFF is Active)	OFF								X								
	ON																
SW4-4 Arduino / mikroBUS	OFF																
	ON																
SW4-5 I3C	OFF																
	ON												X*1				
SW4-6 MIPI	OFF																
	ON																
SW4-7 USBFS	OFF																
	ON																
SW4-8 USBHS	OFF																
	ON																

[*1] This is permitted if the Camera is not connected to the EK-RA8P1

Downloaded from Arrow.com.

5. System Control and Ecosystem Access Area

The following figure shows the System Control and Ecosystem Access area on the EK-RA8P1 board. Subsequent sections detail the features and functionality provided in the area.

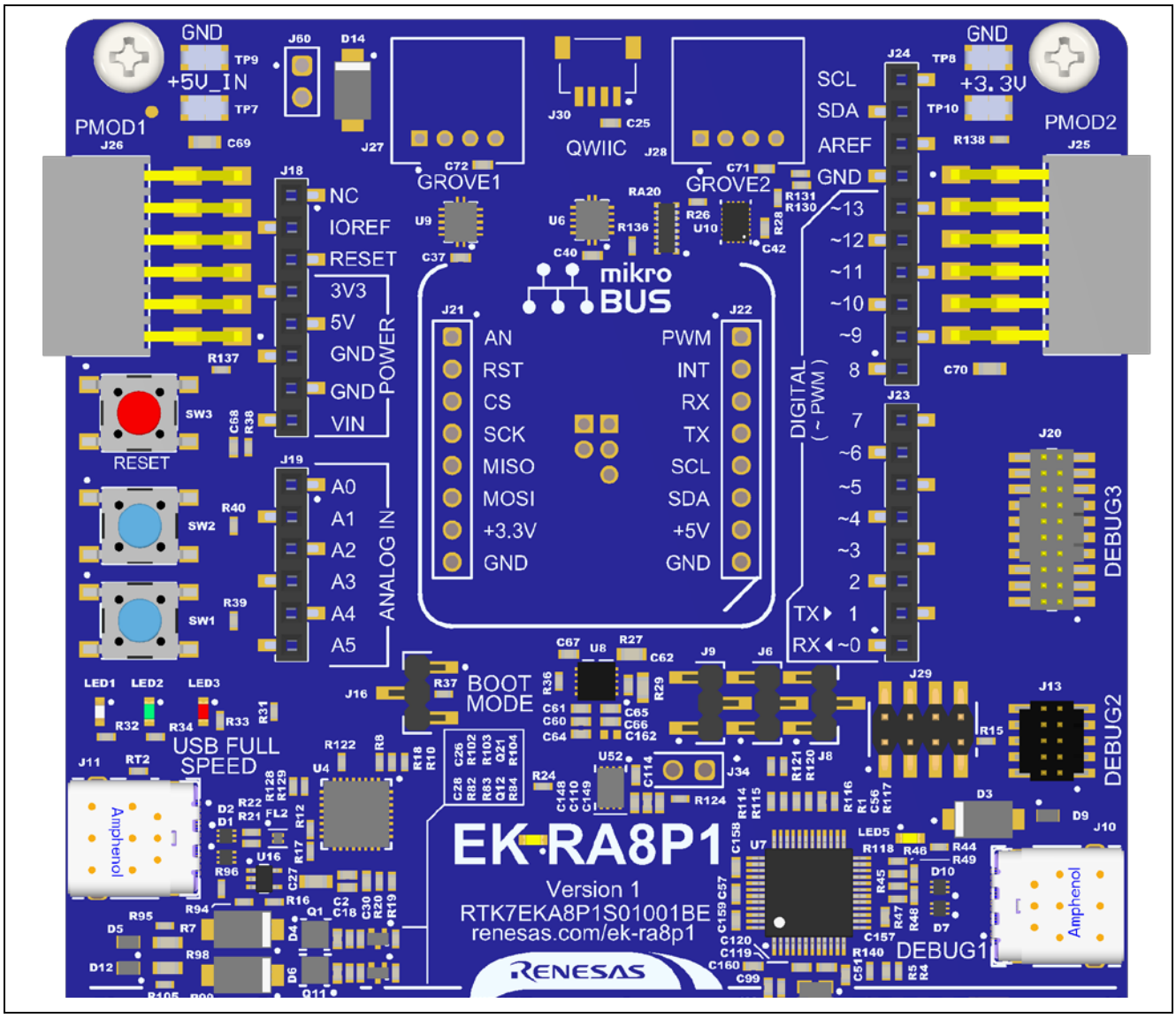

Figure 7. System Control and Ecosystem Access Area

Downloaded from Arrow.com.

5.1 Power

The EK-RA8P1 kit is designed for +5 V operation. An on-board Low Dropout Regulator (ISL80103IRAJZ) is used to convert the 5 V supply to a 3.3 V supply. Also fitted is a Low Dropout Regulator (ISL9005AIRCZ-T) to convert the 3.3 V supply to a 1.8 V supply. The 3.3 V supply is used to power the RA MCU and other peripheral features.

5.1.1 Power Supply Options

This section describes the different ways in which EK-RA8P1 kit can be powered.

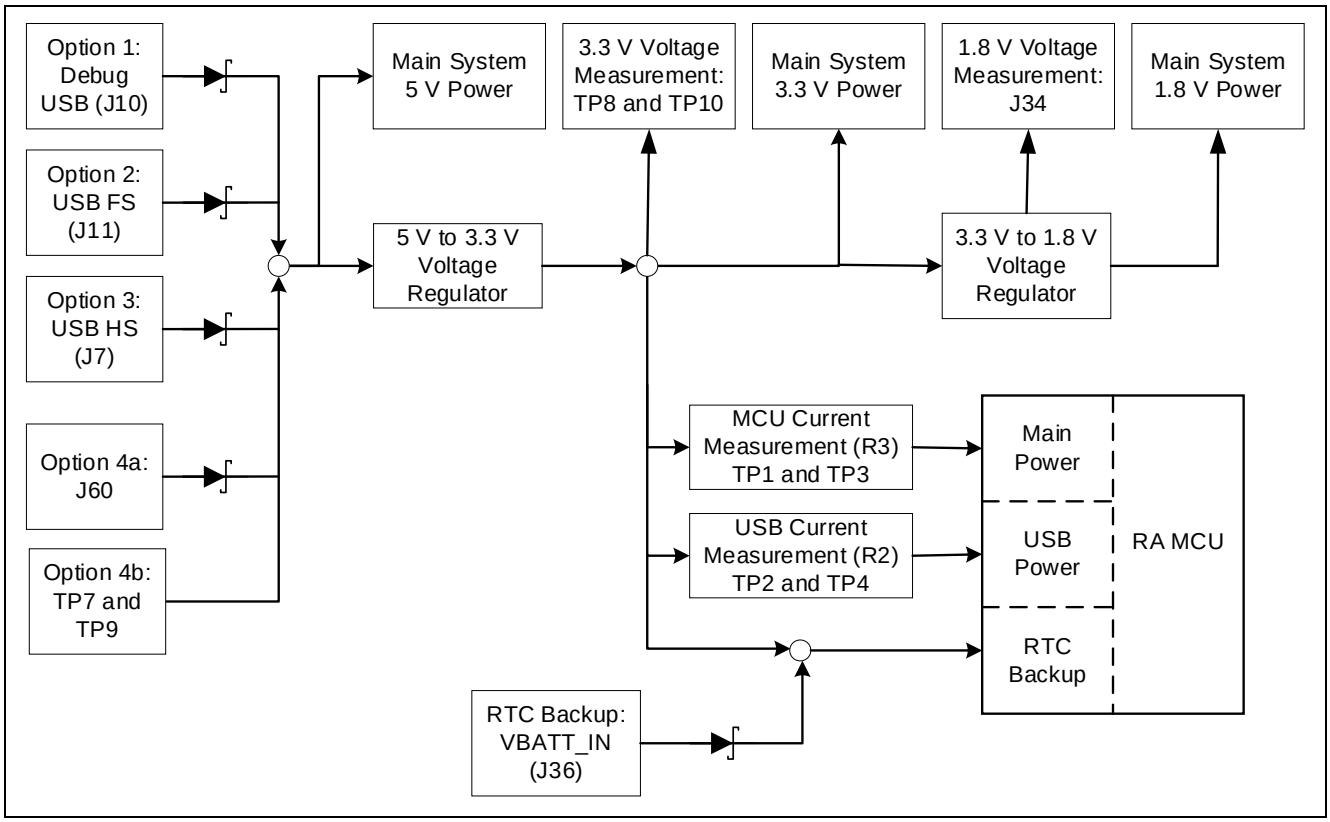

Figure 8. Power Supply Options

5.1.1.1 Option 1: Debug USB

5 V may be supplied from an external USB host to the USB Debug connector (J10) labelled DEBUG1 on the board. Power from this source is connected to the Main System 5 V Power. Reverse current protection is provided between this connector and the Main System 5 V Power by D3. Link E59 can be shorted to eliminate the voltage drop across D3, at the expense of removing the reverse polarity protection from this input.

5.1.1.2 Option 2: USB Full Speed

5 V may be supplied from an external USB host to the USB Full Speed connector (J11) labelled USB FULL SPEED on the board. Power from this source is connected to the Main System 5 V Power. Reverse current protection is provided between this connector and the Main System 5 V Power by D4. Link E60 can be shorted to eliminate the voltage drop across D4, at the expense of removing the reverse polarity protection from this input.

5.1.1.3 Option 3: USB High Speed

5 V may be supplied from an external USB host to the USB High Speed connector (J7) labelled USB HIGH SPEED on the board. Power from this source is connected to the Main System 5 V Power. Reverse current protection is provided between this connector and the Main System 5 V Power by D6. Link E61 can be shorted to eliminate the voltage drop across D6, at the expense of removing the reverse polarity protection from this input.

Downloaded from Arrow.com.

5.1.1.4 Option 4: 5 V Test Points

5 V may be supplied from an external power supply to test points on the board. J60 provides large via style test points that can accommodate a 0.1” pin header or connector. Reverse current protection is provided at J60-1 by D14. Link E62 can be shorted to eliminate the voltage drop across D14, at the expense of removing the reverse polarity protection from this input.

TP7 (5 V) and TP9 (GND) are loop-style test points that have no reverse polarity protection. TP7 directly connects to the 5V input pin of the voltage regulator U8 and to the Main System 5V Power. Care must be taken before applying an external supply to this test point to ensure that that the polarity is correct. Failure to do so could result in damage to components on the PCB.

These test points can be found at the top left of the board above Pmod 1.

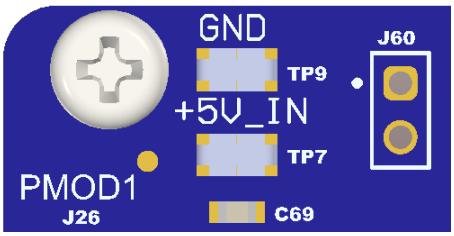

Figure 9. +5 V Test Point Location

5.1.1.5 RTC Backup: VBATT Supply

The MCU provides a battery backup function that maintains power to certain MCU peripherals in the event of a power loss (for example the Real Time Clock). A battery (lithium coin cell etc.) can be connected to J36 (not fitted) to provide this power. For further details see the MCU hardware manual.

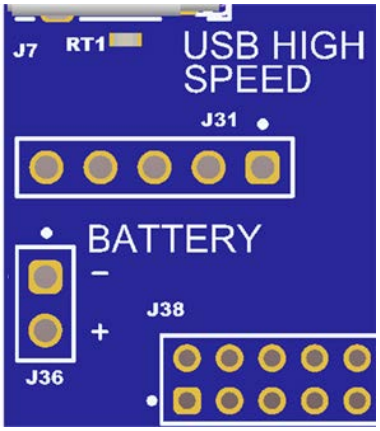

Figure 10. VBATT Supply (J36) Location

5.1.2 Power Supply Considerations

The on-board LDO regulator which supplies +3.3 V has a built-in current limit of 3.0 A. Make sure the total current required by the RA MCU, any active on-board features, and any connected peripheral devices does not exceed this limit.

The on-board LDO regulator which supplies +1.8 V has a built-in current limit of 300 mA. Make sure the total current required by any active on-board features and any connected peripheral devices connected to this supply does not exceed this limit.

Note: The total current available depends on the configuration of the host USB port, for example an enumerated USB-A port may have a maximum output current capability of 500 mA. In these cases, multiple power sources may be required.

5.1.3 Power-up Behavior

When powered, the white LED near the center of the board (the “dash” in the EK-RA8P1 name) will light up. For more details on initial power up behavior, see the *EK-RA8P1 Quick Start Guide*.

Downloaded from Arrow.com.

5.1.4 USB HS and USB FS Supply Voltage

The USB HS and USB FS circuitry require a 5 V supply for correct operation, and the voltage drop across the reverse polarity protection diodes on the regulator input can take the supply voltage outside the limits for reliable operation. If this is encountered, then link E59, E60, E61, or E62 can be shorted to eliminate the input diode voltage drop and ensure a full 5 V supply to the USB circuitry. Please note that shorting the input diode removes the reverse polarity protection from the associated power supply input.

5.2 Debug and Trace

The EK-RA8P1 board supports the following three debug modes.

Table 5. Debug Modes

Debug Modes	Debugger MCU (the device that connects to the IDE on PC)	Target MCU (the device that is being debugged)	Debugging Interface/Protocol	Connector Used
Debug on-board	RA4M2 (on-board)	RA8P1 (on-board)	SWD, JTAG	USB-C (J10)
Debug in	External debugging tools	RA8P1 (on-board)	SWD, SWO, ETM, JTAG	20-pin connector (J20) or 10-pin connector (J13)
Debug out	RA4M2 (on-board)	Any external RA MCU	SWD, SWO, JTAG	USB-C (J10) plus either 20-pin connector (J20) or 10-pin connector (J13)

Notes:

- See Table 7 for the Debug USB connector pin definition.
- See Table 10 for the 20-pin JTAG connector pin definition.
- See Table 11 for the 10-pin JTAG connector pin definition.

The following table summarizes the jumper configuration for each of the debug modes.

Table 6. Jumper Connection Summary for Different Debug Modes

Debug Modes	J6	J8	J9	J29
Debug on-board	Jumper on pins 2-3	Jumper on pins 1-2	Jumper on pins 2-3	Jumpers on pins 1-2, 3-4, 5-6, 7-8
Debug in	Jumper on pins 2-3	Jumper on pins 1-2	Jumper on pins 1-2	Jumpers on pins 1-2, 3-4, 5-6, 7-8
Debug out	Jumper on pins 2-3	Jumper on pins 2-3	Jumper on pins 2-3	All pins open

5.2.1 Debug On-Board

The on-board debug functionality is provided using Renesas RA4M2 Debug MCU and SEGGER J-Link® firmware. Debug USB-C connector (J10) connects the RA4M2 Debug MCU to an external USB Full Speed Host, allowing reprogramming and debugging of the target RA MCU firmware. This connection is the default debug mode for the EK-RA8P1 board.

The RA4M2 Debug MCU connects to the target RA MCU using the SWD interface.

Table 7. Debug USB Port Assignments

Debug USB Port Assignments		EK-RA8P1
Pin	**Description**	**Signal/Bus**
J10-A1	GND	GND
J10-A2	TX1+	NC
J10-A3	TX1-	NC
J10-A4	VBUS	+5V_USB_DBG
J10-A5	CC1	USB_JLOB_CC1
J10-A6	DA+	USB_JLOB_P
J10-A7	DA-	USB_JLOB_N

Downloaded from Arrow.com.

Debug USB Port Assignments		EK-RA8P1
Pin	**Description**	**Signal/Bus**
J10-A8	SBU1	N.C.
J10-A9	VBUS	+5V_USB_DBG
J10-A10	RX2-	NC
J10-A11	RX2+	NC
J10-A12	GND	GND
J10-B1	GND	GND
J10-B2	TX2+	NC
J10-B3	TX2-	NC
J10-B4	VBUS	+5V_USB_DBG
J10-B5	CC2	USB_JLOB_CC2
J10-B6	DB+	USB_JLOB_P
J10-B7	DB-	USB_JLOB_N
J10-B8	SBU2	NC
J10-B9	VBUS	+5V_USB_DBG
J10-B10	RX1-	NC
J10-B11	RX1+	NC
J10-B12	GND	GND
J10-S1	SHIELD	GND
J10-S2	SHIELD	GND
J10-S3	SHIELD	GND
J10-S4	SHIELD	GND

A yellow LED, LED5, shows the visual status of the debug interface. When the EK-RA8P1 board is powered on, and LED5 is blinking, it indicates that the RA4M2 Debug MCU is not connected to a programming host. When LED5 is on solid, it indicates that the RA4M2 Debug MCU is connected to a programming interface.

To configure the EK-RA8P1 board to use the Debug On-Board mode, configure the jumpers using the following table.

Table 8. Debug On-Board Jumper Configuration

Location	Default Open/Closed	Function
J6	Jumper on pins 2-3	Target RA MCU MD connected to debug
J8	Jumper on pins 1-2	Target RA MCU RESET_L connected to debug RESET_L
J9	Jumper on pins 2-3	RA4M2 Debug MCU in normal operation mode
J29	Jumpers on pins 1-2, 3-4, 5-6, 7-8	Target RA MCU debug signals connected to the debug interface

Downloaded from Arrow.com.

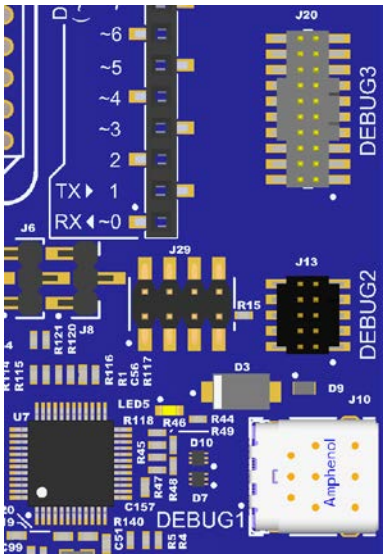

Figure 11. EK-RA8P1 Debug Interface

5.2.2 Debug In

One 20-pin Cortex® Debug Connector at J20 supports JTAG, SWD, SWO, and ETM (TRACE) debug. One 10-pin Cortex® Debug Connector at J13 supports JTAG, SWD, and SWO. Either of these connectors may be used for external debug of the target RA MCU.

To configure the EK-RA8P1 board to use the Debug In mode, configure the jumpers using the following table.

Table 9. Debug In Mode Jumper Configuration

Location	Default Open/Closed	Function
J6	Jumper on pins 2-3	Target RA MCU MD connected to debug
J8	Jumper on pins 1-2	Target RA MCU RESET_L connected to debug RESET_L
J9	Jumper on pins 1-2	RA4M2 Debug MCU is held in RESET
J29	Jumpers on pins 1-2, 3-4, 5-6, 7-8	Target RA MCU debug signals connected to the Debug Interface

Table 10. JTAG/SWO/SWD/ETM Port Assignments

JTAG Port Assignments				EK-RA8P1
Pin	**JTAG Pin Name**	**SWD Pin Name**	**ETM Pin Name**	**Signal/Bus**
J20-1	Vtref	Vtref	Vtref	+3V3
J20-2	TMS	SWDIO	TMS / SWDIO	P210/SWDIO/TMS
J20-3	GND	GND	GND	GND
J20-4	TCK	SWCLK	TCK / SWCLK	P211/SWCLK/TCK
J20-5	GND	GND	GND	GND
J20-6	TDO	SWO	TDO / SWO	P209/SWO/TDO
J20-7	Key	Key	Key	NC
J20-8	TDI	N/A	TDI / N/A	P208/TDI
J20-9	GNDDetect	GNDDetect	GNDDetect	GND (cut E30 to open)
J20-10	nSRST	nSRST	nSRST	RESET_L
J20-11	GND	GND	GND	GND
J20-12	N/A	N/A	TCLK	P308/TCLK*
J20-13	GND	GND	GND	GND
J20-14	N/A	N/A	TDATA0	P307/TDATA0*
J20-15	GND	GND	GND	GND

Downloaded from Arrow.com.

JTAG Port Assignments				EK-RA8P1
Pin	**JTAG Pin Name**	**SWD Pin Name**	**ETM Pin Name**	**Signal/Bus**
J20-16	N/A	N/A	TDATA1	P306/TDATA1*
J20-17	GND	GND	GND	GND
J20-18	N/A	N/A	TDATA2	P305/TDATA2*
J20-19	GND	GND	GND	GND
J20-20	N/A	N/A	TDATA3	P304/TDATA3*

* Option to isolate with E44, E45, E46, E47 and E48

Table 11. JTAG/SWO/SWD Port Assignments

JTAG Port Assignments			EK-RA8P1
Pin	**JTAG Pin Name**	**SWD Pin Name**	**Signal/Bus**
J13-1	Vtref	Vtref	+3V3
J13-2	TMS	SWDIO	P210/SWDIO/TMS
J13-3	GND	GND	GND
J13-4	TCK	SWCLK	P211/SWCLK/TCK
J13-5	GND	GND	GND
J13-6	TDO	SWO	P209/SWO/TDO
J13-7	Key	Key	NC
J13-8	TDI	N/A	P208/TDI
J13-9	GNDDetect	GNDDetect	GND (cut E30 to open)
J13-10	nSRST	nSRST	RESET_L

Note: The Cortex® Debug Connector is fully described in the Arm® CoreSight™ Architecture Specification.

5.2.3 Debug Out

The EK-RA8P1 board can be configured to use the RA4M2 Debug MCU to debug target RA MCU on an external board.

A yellow indicator, LED5, shows the visual status of the debug interface. When the EK-RA8P1 board is powered on, and LED5 is blinking, this indicates that the RA4M2 Debug MCU is not connected to a programming host. When LED5 is on solid, this indicates that the RA4M2 Debug MCU is connected to a programming interface. When the debug interface is actively in use, the LED will flicker randomly.

To configure the EK-RA8P1 board to use the Debug Out mode, configure the jumpers according to the following table.

Table 12. Debug Out Jumper Configuration

Location	Default Open/Closed	Function
J6	Jumper on pins 2-3	No connection to RA MCU
J8	Jumper on pins 2-3	On-board RA MCU is held in RESET
J9	Jumper on pins 2-3	RA4M2 Debug MCU in normal operation mode
J29	All jumpers open	Disconnects the on-board RA MCU debug signals from the Debug Interface

5.2.4 Debug Serial

The debug port can act as a virtual COM port that supports serial communication. See Table 13 below.

Table 13. Debug Serial Port Assignment

RA8P1 Port Assignment	Debugger U7 Serial Port Assignment
PD02 (TXD)	P301
PD03 (RXD)	P302
PD04 (RTS)*1	P408
PD05 (CTS)*2	P409

*1 Disconnected by cutting link E9

*2 Disconnected by cutting link E17

Downloaded from Arrow.com.

5.3 Ecosystem

The System Control and Ecosystem area provides users the option to simultaneously connect several third-party add-on modules compatible with five most popular ecosystems using the following connectors:

1. Two Seeed Grove® system (I^2C/I3C/Analog) connectors (not populated)
2. SparkFun Qwiic® connector (not populated)
3. Two Digilent Pmod™ (SPI, UART and I^2C) connectors
4. Arduino™ (Uno R3) connector
5. MikroElektronika mikroBUS™ connector (not populated)

5.3.1 Seeed Grove® Connections

5.3.1.1 Grove 1

A Seeed Grove® I3C connector footprint is provided at J27. The RA MCU acts as a two-wire serial master in I3C mode or I^2C mode, and a connected module acts as a two-wire serial slave. When the camera is in use I3C is no longer available. The devices on the I3C bus will be connected to the I^2C bus when the I3C_SEL is disabled.

Table 14. Grove 1 Port Assignments

Grove 1 Connector		EK-RA8P1
Pin	**Description**	**Signal/Bus**
J27-1	I3C_SCL/I2C_SCL[*1]	P400 (SCL0) / P512 (SCL1) [*1]
J27-2	I3C_SDA/I2C_SDA[*1]	P401 (SDA0) / P511 (SDA1) [*1]
J27-3	VCC	+3.3 V
J27-4	GND	GND

[*1] Option selection by SW4-5 which needs to be ON for I3C and off for I^2C. Pullup resistors need to be enabled in software to use I^2C (see section 5.4.2).

5.3.1.2 Grove 2

A Seeed Grove® I^2C connector footprint is provided at J28. The RA MCU acts as a two-wire serial master, and a connected module acts as a two-wire serial slave. Option links E39, E40, E41, and E42 provide the capability to convert this connector to an analog Seeed Grove® implementation.

Table 15. Grove 2 Port Assignments

Grove 2 Connector		EK-RA8P1	
Pin	**Description**	**Signal/Bus**	
J28-1	SCL	P512 (SCL1) [*1]	P002 (AN002) [*2]
J28-2	SDA	P511 (SDA1) [*1]	P005 (AN005) [*2]
J28-3	VCC	+3.3 V	
J28-4	GND	GND	

[*1] Jumpers E39 and E40 are closed, E41 and E42 are open
[*2] Jumpers E39 and E40 are open, E41 and E42 are closed

5.3.2 SparkFun® Qwiic® Connections

A SparkFun® Qwiic® connector footprint is provided at J30. The Main MCU acts as a two-wire serial master, and a connected module acts as a two-wire serial slave (data lines shared with Grove 1).

Table 16. Qwiic® Port Assignments

Qwiic® Connector		EK-RA8P1
Pin	**Description**	**Signal/Bus**
J30-1	GND	GND
J30-2	VCC	+3.3 V
J30-3	I3C_SDA/I2C_SDA *	P401 (SDA0) / P511 (SDA1) *
J30-4	I3C_SCL/I2C_SCL *	P400 (SCL0) / P512 (SCL1) *

* Option selection by SW4-5 which needs to be ON for I3C and off for I^2C. Pullup resistors need to be enabled in software to use I^2C (see section 5.4.2).

Downloaded from Arrow.com.

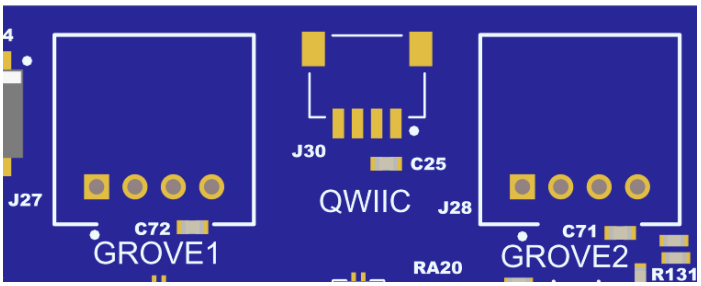

Figure 12. Seeed Grove® and SparkFun® Qwiic® Connector Footprints

5.3.3 Digilent Pmod™ Connectors

Two 12-pin connectors are provided to support Pmod modules where the RA MCU acts as the master, and the connected module acts as a slave device.

These interfaces may be configured in firmware to support several Pmod types such as Type-2A (expanded SPI), Type-3A (expanded UART), and Pmod Type-6A (I^2C).

The default 12-pin Pmod interface supports +3.3 V devices. Please ensure that any Pmod device installed is compatible with a +3.3 V supply.

Note: Both Pmods use the SCI peripheral in "Simple SPI" mode and so do not offer the full functionality of the SPI peripheral. Please see the hardware manual for full details of the SCI "Simple SPI" mode.

5.3.3.1 Pmod 1

A 12-pin Pmod connector is provided at J26, Pmod 1. This Pmod connector is controlled by switch options SW4-1 and SW4-2. By default Pmod 1 is in SPI mode (SW4-1 OFF and SW4-2 OFF).

Table 17. Pmod 1 Port Assignments

Pmod 1 Connector				**EK-RA8P1**	**Pmod 1 Configuration**	
Pin	**Option Type-2A (SPI)*1**	**Option Type-3A (UART)*1**	**Option Type-6A (I^2C)*1**	**Signal/Bus**	**Short**	**Open**
J26-1	SS		IRQ	P804 (SS2/IRQ18)		
		CTS		P800 (CTS2/IRQ17)		
J26-2	MOSI	TXD	RST	P801 (MOSI2/TXD2/RST)		
J26-3	MISO	RXD		P802 (MISO2/RXD2)		
			SCL	P512 (SCL1)		
J26-4	SCK			P803 (SCK2)		
		RTS		P804 (RTS2)		
			SDA	P511 (SDA1)		
J26-5	GND			GND		
J26-6	VCC *2			+3.3 V	E25	E35
				+5.0 V	E35	E25
J26-7	IRQ			P006 (IRQ11-DS)		
J26-8	RESET (master to slave)			P402		
J26-9	GPIO			P412		
J26-10	GPIO			P413		
J26-11	GND			GND		
J26-12	VCC *2			+3.3 V	E25	E35
				+5.0 V	E35	E25

*1 Option is selected by setting switches SW4-1 and SW4-2 (see Table 18)

Downloaded from Arrow.com.

*2 Caution: 5 V optional supply is provided (J26-6 and J26-12), however the interface must only be driven with 3 V signals from the Pmod 1. The EK-RA8P1 will only provide 3.3 V signal levels to the Pmod 1.

Table 18. Pmod 1 Switch Configuration

SW4-1	SW4-2	Selected function	Conflict
Off	Off	SPI	Octo-SPI
On	Off	UART	Octo-SPI
Off	On	I^2C	-
On	On	Invalid	Invalid

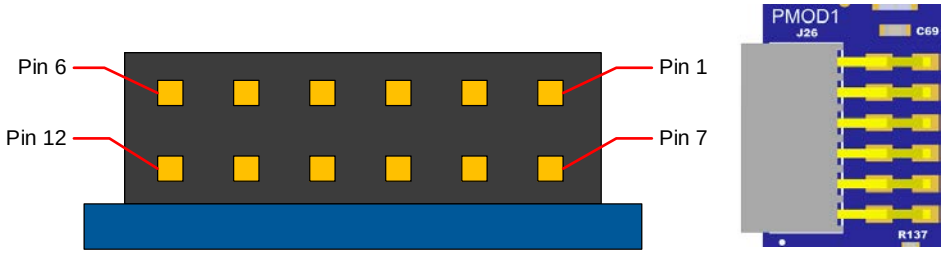

Figure 13. Pmod 1 Connector

5.3.3.2 Pmod 2

A 12-pin Pmod connector is provided at J25, Pmod 2.

Table 19. Pmod 2 Port Assignments

Pmod 2 Connector			EK-RA8P1	Pmod 2 Configuration	
Pin	Option Type-2A (SPI)	Option Type-3A (UART)	Signal/Bus	Short	Open
J25-1	SS		P604 (SSLB0)	E15	E10
		CTS	P605 (CTS0)	E10	E15
J25-2	MOSI	TXD	P603 (MOSIB/TXD0)		
J25-3	MISO	RXD	P602 (MISOB/RXD0)		
J25-4	SCK		P601 (RSPCKB)	E16	E14
		RTS	P604 (RTS0)	E14	E16
J25-5	GND		GND		
J25-6	VCC		+3.3 V		
J25-7	IRQ		P012 (IRQ15)		
J25-8	RESET (master to slave)		P410		
J25-9	GPIO		P409		
J25-10	GPIO		P704		
J25-11	GND		GND		
J25-12	VCC		+3.3 V		

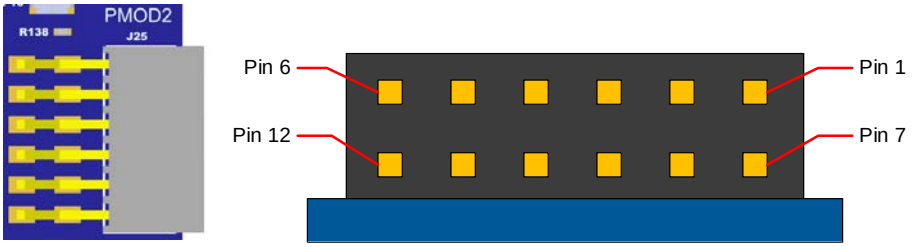

Figure 14. Pmod 2 Connector

Downloaded from Arrow.com.

5.3.4 Arduino™ Connector

Near the center of the System Control and Ecosystem Access area is an Arduino™ Uno R3 compatible connector interface.

By default, SW4-4 is off which disables connectivity to the Arduino™ headers, prioritizing Octo-SPI connectivity. The Arduino™ connector cannot be used in conjunction with Octo-SPI. Please refer to Table 20 to see which pins are impacted by SW4-4.

Table 20. Arduino Uno Port Assignments

Arduino Compatible Connectors				**EK-RA8P1**
Pin	**Description**			**Signal/Bus**
J18-1	NC			NC
J18-2	IOREF			+3.3 V
J18-3	RESET			RESET_L
J18-4	3.3 V			+3.3 V
J18-5	5 V			+5 V
J18-6	GND			GND
J18-7	GND			GND
J18-8	VIN			NC
J19-1	A0			P001 (AN001)
J19-2	A1			P007 (AN007)
J19-3	A2			P003 (AN003)
J19-4	A3			P004 (AN004)
J19-5	A4			P014 (AN014/DA0)
J19-6	A5			P015 (AN015/DA1)
J23-1	D0	RXD	PWM	P808 (RXD7/GTIOC13B) *2
J23-2	D1	TXD		P809 (TXD7) *2
J23-3	D2	INT0		P011 (IRQ16)
J23-4	D3	INT1	PWM	P811 (IRQ22/GTIOC10B)
J23-5	D4		PWM	P810 (IRQ21/GTIOC10A)
J23-6	D5		PWM	P104 (IRQ1/GTIOC1B) *2
J23-7	D6		PWM	P105 (IRQ0/GTIOC1A) *2
J23-8	D7			P312 (IRQ22-DS)
J24-1	D8			PD01 (IRQ22)
J24-2	D9		PWM	P110 (IRQ20/GTIOC9B)
J24-3	D10	SPI_SS	PWM	P103 (SSLB/GTIOC2A) *2
J24-4	D11	SPI_MOSI	PWM	P101 (MOSIB/GTIOC8A) *2
J24-5	D12	SPI_MISO	PWM	P100 (MISOB/GTIOC8B) *2
J24-6	D13	SPI_SCK		P102 (RSPCKB/GTIOC2B) *2
J24-7	GND			GND
J24-8	ARDUINO_AREF			+3.3 V
J24-9	I3C_SDA/I2C_SDA *1			P401 (SDA0)/P511 (SDA1) *1
J24-10	I3C_SCL/I2C_SCL *1			P400 (SCL0)/P512 (SCL1) *1

*1 Option selection by SW4-5 which needs to be ON for I3C and off for I^2C. Pullup resistors need to be enabled in software to use I^2C (see section 5.4.2).
*2 Option selection by SW4-4

Downloaded from Arrow.com.

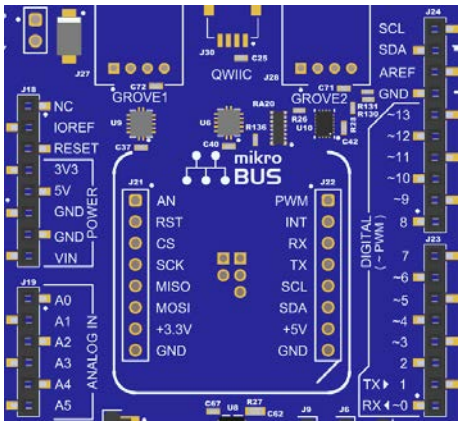

Figure 15. Arduino Uno Connectors

5.3.5 MikroElektronika mikroBUS™ Connector

In the center of the System Control and Ecosystem Access area is a mikroBUS™ compatible connector interface (not populated). This interface is compliant with mikroBUS™ Standard Specifications revision 2.00.

By default, SW4-4 is off which disables connectivity to the mikroBUS™ pins, prioritizing Octo-SPI connectivity. The mikroBUS™ connector cannot be used in conjunction with Octo-SPI. Please refer to Table 21 to see which pins are impacted by SW4-4.

Table 21. mikroBUS™ Port Assignments

mikroBUS™ Port Connectors		**EK-RA8P1**
Pin	**Description**	**Signal/Bus**
J21-1	AN (Analog)	P004 (AN004)
J21-2	RST (Reset)	P201/MD (MIKROBUS RESET_L)
J21-3	CS (SPI Chip Select)	P103 (SSLB0) *2
J21-4	SCK (SPI Clock)	P102 (RSPCKB) *2
J21-5	MISO	P100 (MISOB)*2
J21-6	MOSI	P101 (MOSIB) *2
J21-7	+3.3 V	+3.3 V
J21-8	GND	GND
J22-1	PWM	P810 (GTIOC10A)
J22-2	INT (Hardware Interrupt)	PD01 (IRQ-22)
J22-3	RX (UART Receive)	P808 (RXD7) *2
J22-4	TX (UART Transmit)	P809 (TXD7) *2
J22-5	I3C_SCL/I2C_SCL*1	P400 (SCL0) / P512 (SCL1) *1
J22-6	I3C_SDA/I2C_SDA*1	P401 (SDA0) / P511 (SDA1) *1
J22-7	+5 V	+5 V
J22-8	GND	GND

*1 Option selection by SW4-5 which needs to be ON for I3C and off for I^2C. Pullup resistors need to be enabled in software to use I^2C (see section 5.4.2).
*2 Option selection by SW4-4

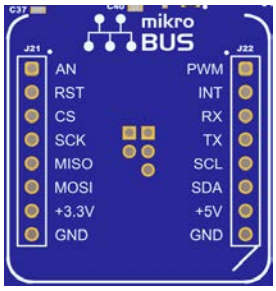

Figure 16. mikroBUS™ Connector

Downloaded from Arrow.com.

5.4 Connectivity

5.4.1 USB Full Speed

The USB-C connection jack (J11) connects the RA MCU USB Full Speed interface to an external USB interface, allowing communications for testing and use of the RA MCU firmware. This connection can be configured as either a USB device or a USB host interface.

For a USB Device configuration, set P500 to low and configure the RA MCU firmware to use the USB Full Speed ports in device mode. Power from an external USB Host on this connection can be used to provide power to the EK-RA8P1 board.

For a USB Host configuration, set P500 to high and configure the RA MCU firmware to use the USB Full Speed ports in host mode. In this configuration, power to J11 is supplied from U4. The total current available is 2 A. Note that the input power sources must be configured with enough power for both the EK-RA8P1 board and the USB Full Speed port in host mode. Connect a USB type-A female to USB-C male cable to J11. USB device cables or devices can be connected to the USB Full Speed port using this cable.

Table 22. USB Full Speed Port Assignments

USB Full Speed Connector		**EK-RA8P1**
Pin	**Description**	**Signal/Bus**
J11-A1	GND	GND
J11-A2	TX1+	NC
J11-A3	TX1-	NC
J11-A4	VBUS	USBFS_cVBUS_CON
J11-A5	CC1	USB_FS_CC1
J11-A6	DA+	USBF_P
J11-A7	DA-	USBF_N
J11-A8	SBU1	NC
J11-A9	VBUS	USBFS_cVBUS_CON
J11-A10	RX2-	NC
J11-A11	RX2+	NC
J11-A12	GND	GND
J11-B1	GND	GND
J11-B2	TX2+	NC
J11-B3	TX2-	NC
J11-B4	VBUS	USBFS_cVBUS_CON
J11-B5	CC2	USB_FS_CC2
J11-B6	DB+	USBF_P
J11-B7	DB-	USBF_N
J11-B8	SBU2	NC
J11-B9	VBUS	USBFS_cVBUS_CON
J11-B10	RX1-	NC
J11-B11	RX1+	NC
J11-B12	GND	GND
J11-S1	SHIELD	GND
J11-S2	SHIELD	GND
J11-S3	SHIELD	GND
J11-S4	SHIELD	GND

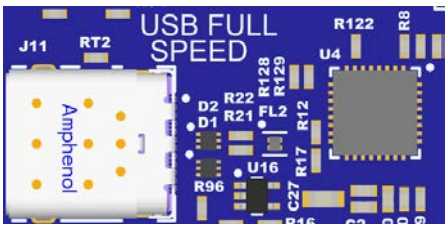

Figure 17. USB Full Speed Connector

Downloaded from Arrow.com.

5.4.2 I3C

By default, SW4-5 is OFF. This connects the Arduino, mikroBUS, Grove 1, and Qwiic® connectors to the RA MCU I²C interface using P511 and P512, leaving P400 available to allow the camera to be used.

If SW4-5 is ON, I3C is active on the board. This connects the Arduino, mikroBUS, Grove 1, and Qwiic® connectors to the RA MCU I3C interface using P400 and P401. When P109 and P013 are set high, the RA MCU I3C peripheral can be used in I²C mode, with the inclusion of two pull up resistors.

All configurations are shown in Table 23.

Table 23. I²C/I3C Pullup Configuration

I3C	I²C	SW4-5	P109 & P013	Usable connectors
N/A	P512 (SCL1) & P511 (SDA1)	Off	Push-pull outputs driven high	Arduino™, mikroBUS, Grove 1, Qwiic®, and camera
P400 (SCL0) & P401 (SDA0)	N/A	On	Inputs (high impedance) or outputs (driven high)*1	Arduino™, mikroBUS, Grove 1, and Qwiic®
N/A	P400 (SCL0) & P401 (SDA0)	On	Push-pull outputs driven high	

*1 Please refer to the I3C specification for management and control of the I3C pull-ups

5.5 Miscellaneous

5.5.1 User and Status LEDs

Eight LEDs are provided on the EK-RA8P1 board. In addition, the Ethernet connector has built-in link status and link speed LEDs. The behavior of the LEDs on the EK-RA8P1 board are described in the following table.

Table 24. EK-RA8P1 Board LED Functions

Designator	Color	Function	MCU Control Port
LED1	Blue	User LED	P600
LED2	Green	User LED	P303
LED3	Red	User LED	PA07
LED4	White	Power on indicator	+3.3 V
LED5	Yellow	Debug LED	J-Link OB MCU
LED6	Amber	Ethernet PHY LED	Ethernet PHY IC LED2
LED7	Yellow	Ethernet PHY LED	Ethernet PHY IC LED0
LED8	Green	Ethernet PHY LED	Ethernet PHY IC LED1

The user LEDs may be isolated from the main MCU, so the associated ports can be used for other purposes. To separate LED1 from P600, trace cut jumper E27 must be open. To separate LED2 from P303, trace cut jumper E26 must be open. To separate LED3 from PA07, trace cut jumper E28 must be open.

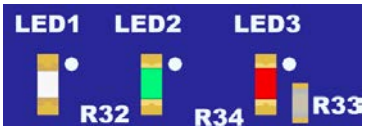

Figure 18. User LEDs

Figure 19. Power LED

Downloaded from Arrow.com.

Figure 20. Debug LED

Figure 21. Ethernet PHY LEDs

5.5.2 User and Reset Switches

Three miniature, momentary, mechanical push-button type SMT switches are mounted on the EK-RA8P1 board. Pressing the reset switch (SW3) generates a reset signal to restart the RA MCU.

Table 25. EK-RA8P1 Board Switches

Designator	Function	MCU Control Port	Switch Color
SW1	User Switch	P009 (IRQ13-DS)	Blue
SW2	User Switch	P008 (IRQ12-DS)	Blue
SW3	MCU Reset Switch	RESET_L	Red

The user switches SW1 and SW2 may be isolated from the main MCU, so the associated ports can be used for other purposes. To separate SW1 from P009, trace cut jumper E31 must be open. To separate SW-2 from P008, trace cut jumper E32 must be open.

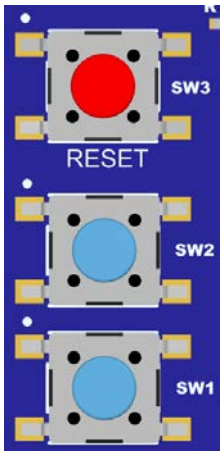

Figure 22. Reset and User Switches

5.5.3 MCU Boot Mode

A three-pin header (J16) is provided to select the boot mode (P201) of the RA MCU. For normal operation, or Single-Chip mode, place a jumper on J16 pins 2-3. To enter SCI Boot mode or USB boot mode, place a jumper on J16 pins 1-2. Please refer to the *RA8 MCU Quick Design Guide* for further information.

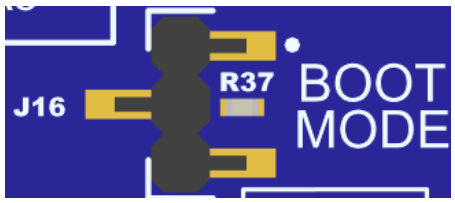

Figure 23. Boot Mode

Downloaded from Arrow.com.

6. Special Feature Access Area

The Special Feature Access area provides features specific to the RA8P1 MCU group. The switches to control the peripheral interface selection are also provided in this section. The following special features are present:

1. Ethernet
2. USB High Speed
3. Octo-SPI Flash
4. SDRAM
5. SPH069 MEMS Microphones
6. DA7212 Audio CODEC

Note: Normally the SDRAM and Octo-SPI devices would be in this area, however, to optimize the layout for this high-speed device, these components have been placed in the MCU Native Pin Access area.

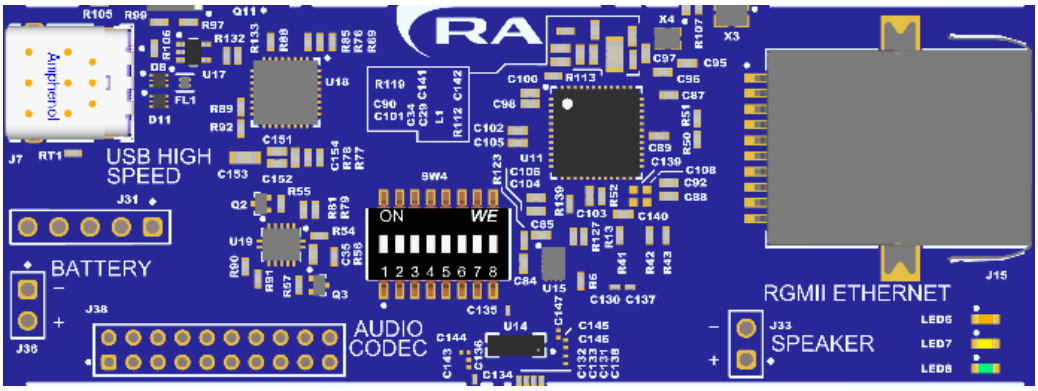

Figure 24. Special Feature Access Area

6.1 Ethernet

The Ethernet interface uses an RGMII Ethernet Physical Layer Transceiver (PHY) (U11), connected to an RJ45 standard Ethernet connector (J15) with integrated magnetics. Status information is given by LED6 (amber), LED7 (yellow), and LED8 (green), all situated next to J15. The Ethernet clock is sourced from a precision 25 MHz clock oscillator (X4) connected directly to the Ethernet PHY.

The Ethernet PHY is disabled by default, to enable Ethernet PHY operation set P708 to a high level.

Table 26. Ethernet PHY Connections

Ethernet Signal Description	EK-RA8P1
	Signal/Bus
MDINT	P107
MDC	P415
MDIO	P414
TXD0	P307
TXD1	P306
TXD2	P305
TXD3	P304
TX_CTL	P310
TX_CLK	P309
RXD0	P906
RXD1	P907
RXD2	P908
RXD3	P909
RX_CTL	P206
RX_CLK	P905
RSTN	P708

Downloaded from Arrow.com.

Table 27. Ethernet Components

Component	Manufacturer	Manufacturer Part Number
Ethernet PHY	Maxlinear	PEF7071VV16-LLHU (GPY111)
RJ45 Connector	Würth Elektronik	7498111001A
25 MHz Oscillator	ECS Inc International	ECS-250-10-37B-CTN-TR

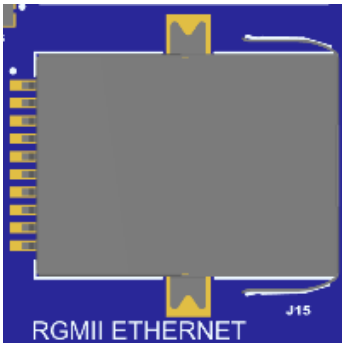

Figure 25. Ethernet Connector

6.2 USB High Speed

The USB-C connection jack (J7) connects the RA MCU USB High Speed interface to an external USB interface, allowing communications for testing and use of the RA MCU firmware. This connection can be configured as either a USB Device or a USB Host interface.

For a USB Device configuration, set PD07 to low and configure the RA MCU firmware to use the USB High Speed ports in device mode. Power from an external USB Host on this connection can be used to provide power to the EK-RA8P1 board.

For a USB Host configuration, set PD07 to high and configure the RA MCU firmware to use the USB High Speed ports in host mode. In this configuration, power to J7 is supplied from U18. The total current available is 2 A. Note that the input power sources must be configured with enough power for both the EK-RA8P1 board and the USB High Speed port in host mode. Connect a USB Type-A female to USB-C male cable to J7. USB device cables or devices can be connected to the USB High Speed port using this cable.

Table 28. USB High Speed Port Assignments

USB High Speed Connector		EK-RA8P1
Pin	**Description**	**Signal/Bus**
J7-A1	GND	GND
J7-A2	TX1+	NC
J7-A3	TX1-	NC
J7-A4	VBUS	USBHS_cVBUS_CON
J7-A5	CC1	USB_HS_CC1
J7-A6	DA+	USBH_P
J7-A7	DA-	USBH_N
J7-A8	SBU1	NC
J7-A9	VBUS	USBHS_cVBUS_CON
J7-A10	RX2-	NC
J7-A11	RX2+	NC
J7-A12	GND	GND
J7-B1	GND	GND
J7-B2	TX2+	NC
J7-B3	TX2-	NC
J7-B4	VBUS	USBHS_cVBUS_CON
J7-B5	CC2	USB_HS_CC2
J7-B6	DB+	USBH_P
J7-B7	DB-	USBH_N

Downloaded from Arrow.com.

USB High Speed Connector		EK-RA8P1
Pin	**Description**	**Signal/Bus**
J7-B8	SBU2	NC
J7-B9	VBUS	USBHS_cVBUS_CON
J7-B10	RX1-	NC
J7-B11	RX1+	NC
J7-B12	GND	GND
J7-S1	SHIELD	GND
J7-S2	SHIELD	GND
J7-S3	SHIELD	GND
J7-S4	SHIELD	GND

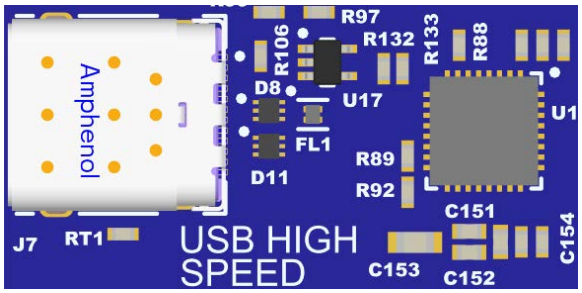

Figure 26. USB High Speed Connector

6.3 Octo-SPI Flash

Included on the EK-RA8P1 board is a 512 Mb (64 MB) Octo serial flash memory (MX25LW51245GXDI00). The Octo-SPI serial flash device (U3) connects to the Octo-SPI peripheral on the RA MCU and defaults to standard SPI mode initially. The flash memory is enabled for XIP (Execute-In-Place) mode directly after power-on.

The Octo-SPI NOR Flash can be isolated from the MCU bus by turning SW4-3 off to allow the ports to be used for other purposes.

Table 29. Octo-SPI Flash Assignments

Octo-SPI Flash Signal Description	EK-RA8P1
Description	**Signal/Bus**
OSPI_FLASH_RESET#	P106
OSPI_FLASH_ECS#	P105
OSPI_FLASH_SCLK	P808
OSPI_FLASH_CS#	P104
OSPI_FLASH_DQS	P801
OSPI_FLASH_SIO0	P100
OSPI_FLASH_SIO1	P803
OSPI_FLASH_SIO2	P103
OSPI_FLASH_SIO3	P101
OSPI_FLASH_SIO4	P102
OSPI_FLASH_SIO5	P800
OSPI_FLASH_SIO6	P802
OSPI_FLASH_SIO7	P804

Downloaded from Arrow.com.

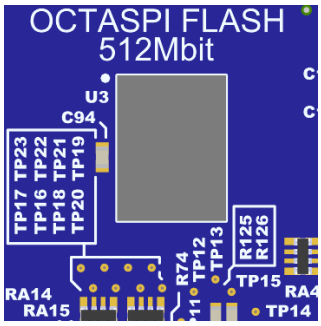

Figure 27. Octo-SPI Flash (labelled as "OCTASPI" on silkscreen text)

6.3.1 OSPI Flash Read / Write Byte Order

The MX25LW51245GXDI00 flash device uses the byte order shown in Figure 28 below (taken from the Macronix MX25LW51245G data sheet) when writing or reading data in DOPI mode.

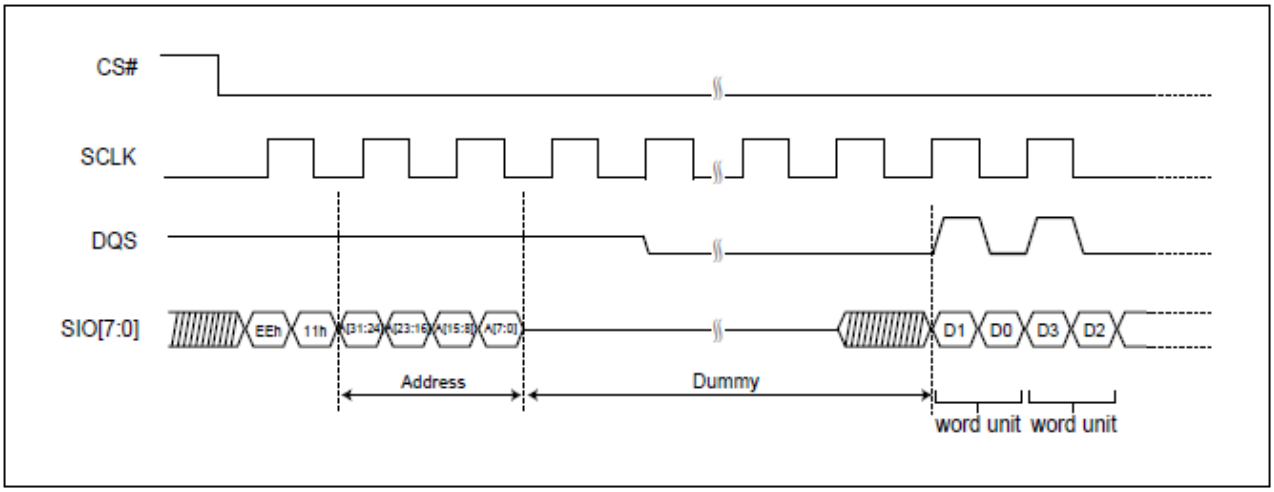

Figure 28. Octo-SPI Flash Read Write Byte Order in DOPI mode

This order (D1, D0, D3, D2 ...) differs from the order that is used when reading or writing data in SPI mode (D0, D1, D2, D3, …). The mode used for reading data must be the same as the mode used for writing data therefore, this must be taken into consideration.

6.4 SDRAM

Included in the EK-RA8P1 board is a 512 Mb (64 MB organized as 16M x 32 bits) SDRAM (IS42S32160F-6BLI) (U2).

Table 30. SDRAM Assignments

SDRAM	**EK-RA8P1**
Description	**Signal/Bus**
SDRAM_A0	PA03
SDRAM_A1	PA02
SDRAM_A2	PA01
SDRAM_A3	PA00
SDRAM_A4	P503
SDRAM_A5	P504
SDRAM_A6	P505
SDRAM_A7	P506
SDRAM_A8	P507
SDRAM_A9	P508
SDRAM_A10	P509

Downloaded from Arrow.com.

SDRAM	**EK-RA8P1**
Description	**Signal/Bus**
SDRAM_A11	P510
SDRAM_A12	P608
SDRAM_BA0	PD00
SDRAM_BA1	PC15
SDRAM_DQ0	P302
SDRAM_DQ1	P301
SDRAM_DQ2	P300
SDRAM_DQ3	P112
SDRAM_DQ4	P113
SDRAM_DQ5	P114
SDRAM_DQ6	P115
SDRAM_DQ7	P609
SDRAM_DQ8	PA11
SDRAM_DQ9	PA12
SDRAM_DQ10	PA13
SDRAM_DQ11	PA14
SDRAM_DQ12	P610
SDRAM_DQ13	P611
SDRAM_DQ14	P612
SDRAM_DQ15	P613
SDRAM_DQ16	PC14
SDRAM_DQ17	PC13
SDRAM_DQ18	PC12
SDRAM_DQ19	PC11
SDRAM_DQ20	PC10
SDRAM_DQ21	PC09
SDRAM_DQ22	PC08
SDRAM_DQ23	PC07
SDRAM_DQ24	PC06
SDRAM_DQ25	PC05
SDRAM_DQ26	PC04
SDRAM_DQ27	PC03
SDRAM_DQ28	PC02
SDRAM_DQ29	PC01
SDRAM_DQ30	PC00
SDRAM_DQ31	P607
SDRAM_CKE	PA06
SDRAM_CLK	PA15
SDRAM_DQM0	P614
SDRAM_DQM1	PA05
SDRAM_DQM2	P615
SDRAM_DQM3	PA04
SDRAM_WE#	PA08
SDRAM_CAS#	PA09
SDRAM_RAS#	PA10
SDRAM_CS#	P813

Downloaded from Arrow.com.

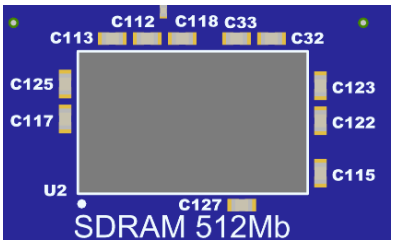

Figure 29. SDRAM

6.5 SPH069 PDM MEMS Microphones

The SPH0690LM4H-1 is a miniature, low power, omnidirectional bottom port microphone with a PDM digital output. The solution consists of a high-performance acoustic sensor, a low noise input buffer, a sigma-delta modulator, and an interface to condition the signal into an industry standard PDM format. Two of these microphones, MIC1 and MIC2, are fitted to the bottom side of the EK-RA8P1 PCB.

Table 31. SPH0649 Port Assignments

MEMS Microphones Port Assignments		EK-RA8P1
Pin	**Description**	**Signal/Bus**
1	DATA	P502
2	SELECT	GND (MIC1), +3.3V (MIC2)
3	GND	GND
4	CLOCK	P812
5	VDD	+3.3 V

Figure 30. MEMS Microphones

6.6 DA7212 Audio CODEC

The DA7212 (U14) is an ultra-low power audio CODEC targeting portable audio devices. The input paths support stereo FM line input and up to four analog (or two analog and two digital) microphones with two independent microphone biases. Audio output terminals are provided at J33 for connection to an external speaker. The audio CODEC's Digital Audio Interface (DAI) has I^2S input and output lines, and control registers can be accessed via the I^2C port. Connections to and from the device are listed in Table 32. Please note that connector J38 is not populated by default.

Note that P405 and P406 are shared with the parallel camera, therefore, the camera cannot be used at the same time as the audio CODEC. J41 has been provided to disconnect the codec from P405 and P406 when the parallel camera is being used.

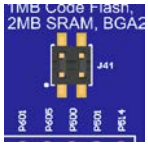

Figure 31. Audio CODEC Disconnection Links (J41)

Downloaded from Arrow.com.

Table 32. Audio CODEC Port Pin Assignments

SSIE/ I²S Audio CODEC		**EK-RA8P1**	
Device Pin Name	Connector Pin	**Description**	**Signal/Bus**
MIC1_P	J38-7	Mic input 1 positive	-
MIC1_N	J38-9	Mic input 1 negative	-
MIC2_P	J38-11	Mic input 2 positive	-
MIC2_N	J38-13	Mic input 2 negative	-
AUX_L	J38-3	Aux input left	-
AUX_R	J38-17	Aux input right	-
MICBIAS1	J38-5	Mic bias output 1	-
MICBIAS2	J38-15	Mic bias output 2	-
HP_L	J38-6	Headphone output left	-
HP_R	J38-8	Headphone output right	-
SP_P	J33-1	Speaker output positive	-
SP_N	J33-2	Speaker output negative	-
HP_CSP	J38-10	Charge pump reservoir capacitor positive	-
HP_CSN	J38-18	Charge pump reservoir capacitor negative	-
HP_CFP	J38-12	Charge pump flyback capacitor positive	-
HP_CFN	J38-14	Charge pump flyback capacitor negative	-
SDA	-	I²C data	P511
SCL	-	I²C clock	P512
DATIN	J41-4	DAI data input	P405*
DATOUT	J41-2	DAI data output	P406*
BCLK	-	DAI bit clock	P403
WCLK	-	DAI word clock (L/R select)	P404
MCLK	-	Master clock	PD06
GND_SENSE	J38-4	Headphone output ground reference	-
GND_CP	J38-2, 16, 19, 20	Digital ground/charge pump	GND
GND_A	J38-2, 16, 19, 20	Analog ground	GND
VDD_SP	-	Speaker driver supply	+5V
VDD_A	-	Analog supply	+1.8V
VDIG	-	Digital supply (LDO Output)	-
VDD_IO	-	Digital interface supply	+3.3V
DACREF	-	Audio DAC reference capacitor	-
VMID	-	Audio mid-rail reference capacitor	-
VREF	-	Bandgap reference capacitor	-

*P405 and P406 are connected to pins J41-3 and J41-1 respectively. Jumper links are fitted to make connections to the CODEC.

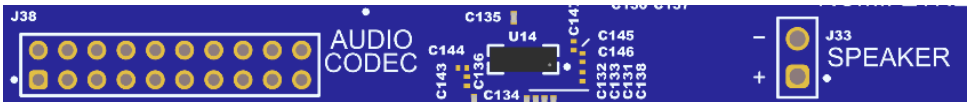

Figure 32. Audio CODEC (U14) and Speaker Connector (J33) and Pin Header (J38)

Downloaded from Arrow.com.

7. MCU Native Pin Access Area

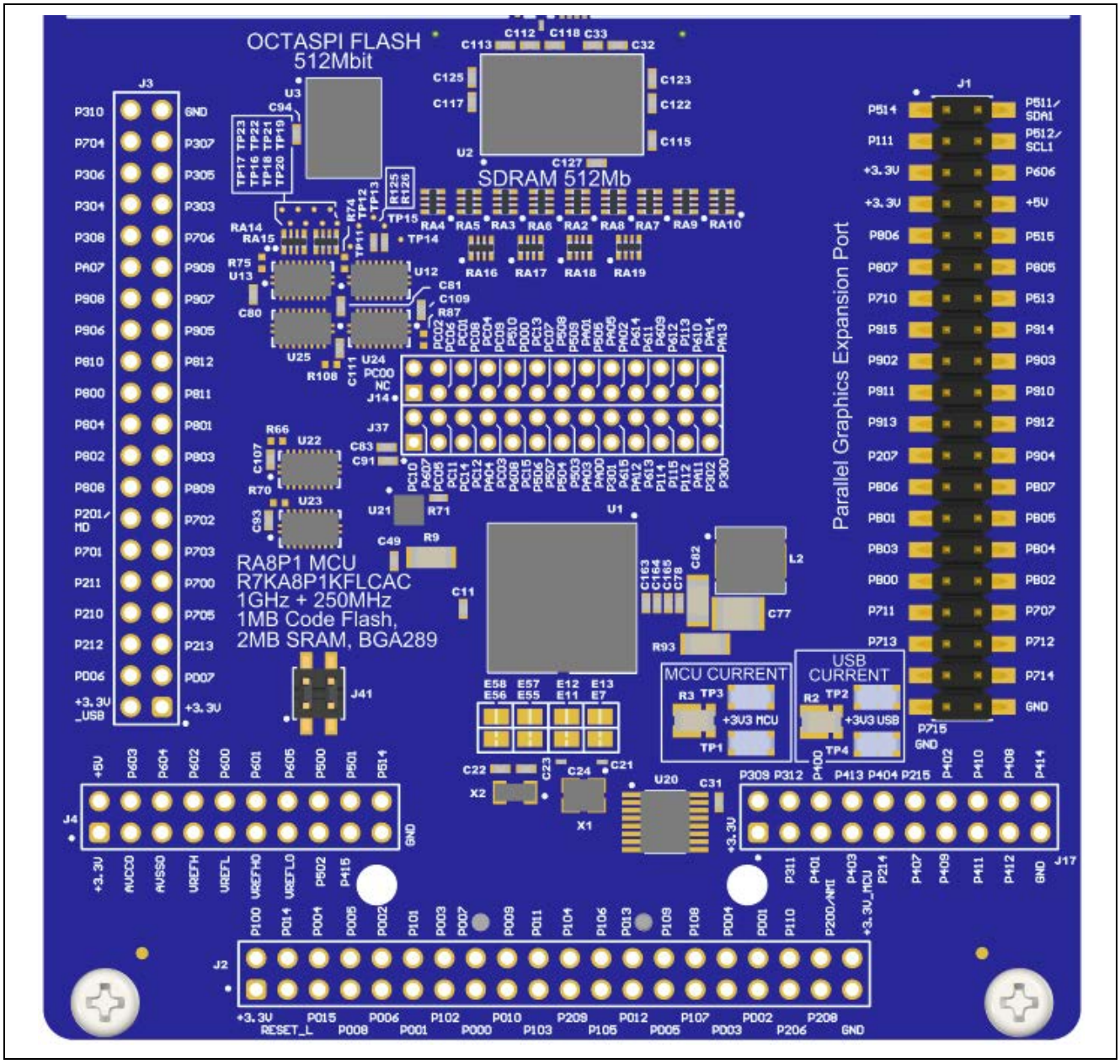

Figure 33. Native Pin Access Area

7.1 Breakout Pin Headers (not populated)

The EK-RA8P1 board pin header footprints, J2, J3, J4 and J17 provide access to nearly all RA MCU interface signals, and to voltages for all RA MCU power ports. Each header pin is labelled with the voltage or port connected to that pin. Refer to the RA8P1 MCU Group User's Manual for details of each port function, and the EK-RA8P1 board schematic for pin header port assignments.

Pin header footprints J14 and J37 provide access to the SDRAM interface pins.

7.2 MCU and USB Current Measurement

Included in the Native Pin Access area are current measurement resistors and test points to measure the MCU USB controller current and the MCU core power current.

The EK-RA8P1 board provides precision 5 mΩ resistors (Yageo, part number PS0612FKE070R005L) for current measurement of the main 3.3 V MCU power and the 3.3 V USB MCU power. Measure the voltage drop across these resistors and use Ohm's Law to calculate the current. For convenience, TP1 and TP3 are

Downloaded from Arrow.com.

provided to measure the main 3.3 V MCU power, and TP2 and TP4 are provided to measure the 3.3 V USB MCU power. See Figure 36 for the location of TP1, TP2, TP3 and TP4.

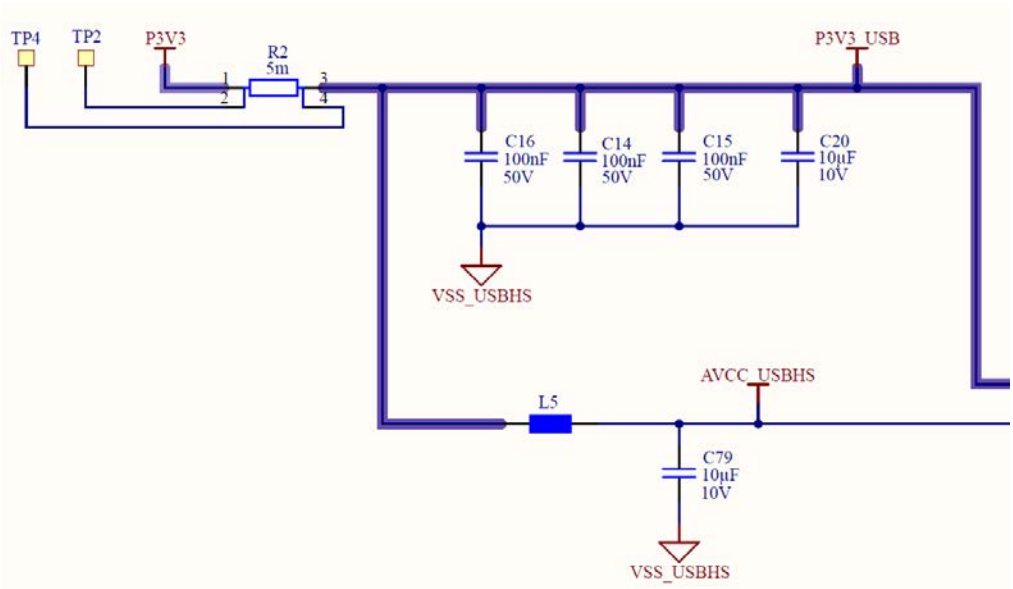

Figure 34. RA USB Current Measurement Circuit

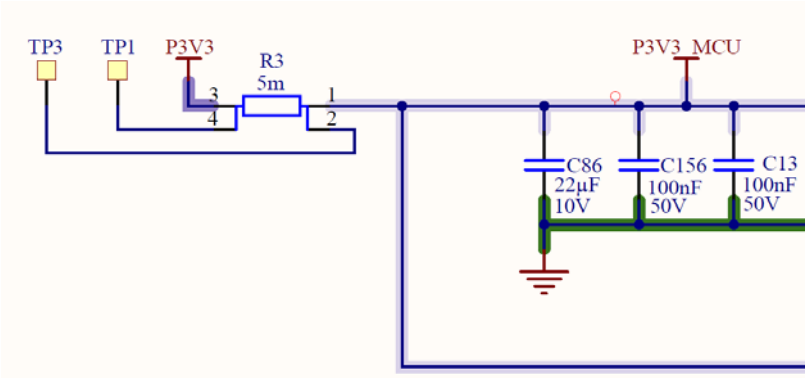

Figure 35. RA +3.3 V Current Measurement Circuit

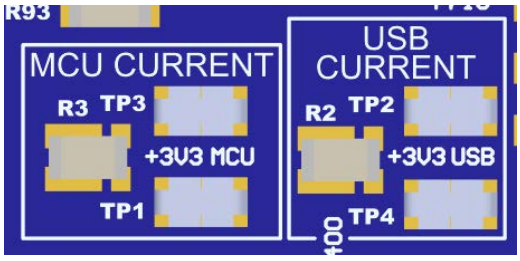

Figure 36. RA MCU and USB Current Measurement

Downloaded from Arrow.com.

8. Expansion Boards

8.1 Parallel Graphics Expansion Board 1

The Parallel Graphics Expansion Board 1 features a 1024 x 600 TFT LCD with capacitive touch overlay and can be configured with 8-8-8, 6-6-6 and 5-6-5 color depth.

The Parallel Graphics Expansion Board 1 connects to the EK-RA8P1 via pin header (J1) as seen in Figure 38. Please ensure SW4-6 is OFF before connecting the Parallel Graphics Expansion Board 1. Table 33 shows the Parallel Graphics Expansion Port assignments and signal names for the EK-RA8P1.

Note that P111, which is used as the interrupt for the capacitive touch portion of the LCD, must have the internal pull-up feature enabled in the RA8P1 MCU configuration. This will ensure proper responsiveness of the LCD capacitive touch overlay.

Table 33. Parallel Graphics Expansion Port Assignments

Parallel Graphics Expansion Port		EK-RA8P1			
Pin	**Description**	**Signal/Bus**	**RGB Signal (RGB888)**	**RGB Signal (RGB666)**	**RGB Signal (RGB565)**
J1-1	BLEN	P514	BLEN	BLEN	BLEN
J1-2	SDA	P511	SDA1	SDA1	SDA1
J1-3	INT#	P111	INT	INT	INT
J1-4	SCL	P512	SCL1	SCL1	SCL1
J1-5	+3.3 V	+3.3 V	+3.3 V	+3.3 V	+3.3 V
J1-6	RESET_L	P606	RST	RST	RST
J1-7	+3.3 V	+3.3 V	+3.3 V	+3.3 V	+3.3 V
J1-8	+5 V	+5 V	+5 V	+5 V	+5 V
J1-9	VSYNC/TCON0	P806	TCON0	TCON0	TCON0
J1-10	CLK	P515	CLK	CLK	CLK
J1-11	DE/TCON2	P807	TCON2	TCON2	TCON2
J1-12	HSYNC/TCON1	P805	TCON1	TCON1	TCON1
J1-13	EXTCLK	P710	EXTCLK	EXTCLK	EXTCLK
J1-14	TCON3	P513	TCON3	TCON3	TCON3
J1-15	DATA1/B1	P915	B1	B3	B4
J1-16	DATA0/B0	P914	B0	B2	B3
J1-17	DATA3/B3	P902	B3	B5	B6
J1-18	DATA2/B2	P903	B2	B4	B5
J1-19	DATA5/B5	P911	B5	B7	G2
J1-20	DATA4/B4	P910	B4	B6	B7
J1-21	DATA7/B7	P913	B7	G3	G4
J1-22	DATA6/B6	P912	B6	G2	G3
J1-23	DATA9/G1	P207	G1	G5	G6
J1-24	DATA8/G0	P904	G0	G4	G5
J1-25	DATA11/G3	PB06	G3	G7	R3
J1-26	DATA10/G2	PB07	G2	G6	G7
J1-27	DATA13/G5	PB01	G5	R3	R5
J1-28	DATA12/G4	PB05	G4	R2	R4
J1-29	DATA15/G7	PB03	G7	R5	R7
J1-30	DATA14/G6	PB04	G6	R4	R6
J1-31	DATA17/R1	PB00	R1	R7	NC
J1-32	DATA16/R0	PB02	R0	R6	NC
J1-33	DATA19/R3	P711	R3	NC	NC
J1-34	DATA18/R2	P707	R2	NC	NC
J1-35	DATA21/R5	P713	R5	NC	NC
J1-36	DATA20/R4	P712	R4	NC	NC
J1-37	DATA23/R7	P715	R7	NC	NC
J1-38	DATA22/R6	P714	R6	NC	NC
J1-39	GND	GND	GND	GND	GND
J1-40	GND	GND	GND	GND	GND

Downloaded from Arrow.com.

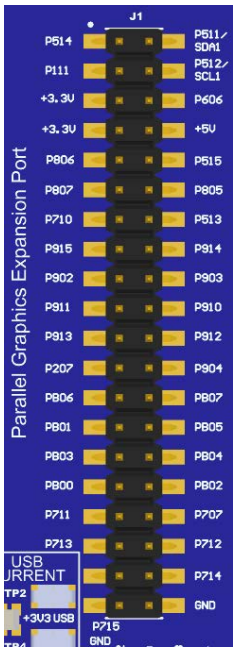

Figure 37. Parallel Graphics Expansion Port

Downloaded from Arrow.com.

8.1.1 Connecting the Parallel Graphics Expansion Board 1 to the EK-RA8P1 Board

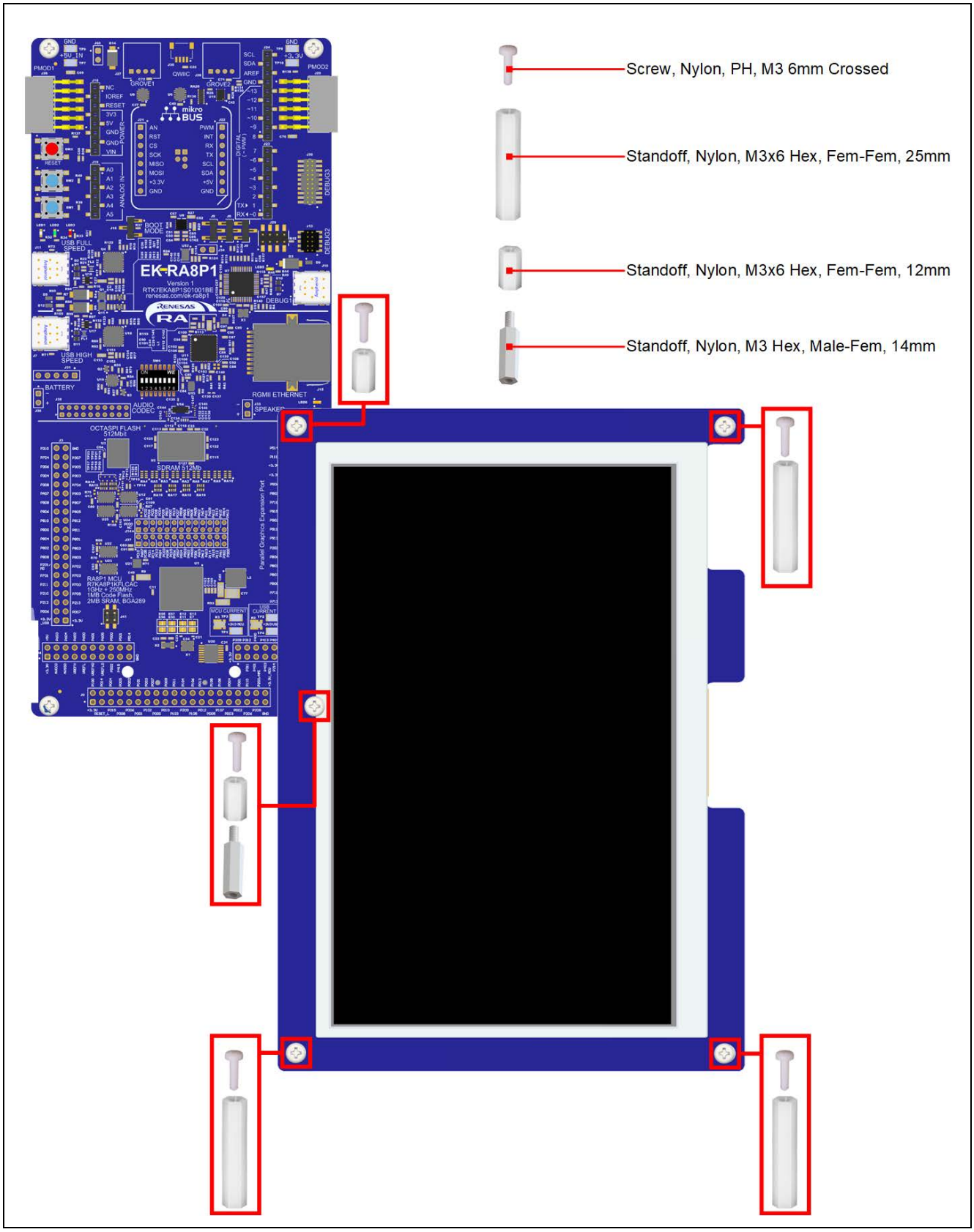

Figure 38. Parallel Graphics Expansion Board 1 connected to EK-RA8P1 Board

Downloaded from Arrow.com.

8.2 MIPI Graphics Expansion Board 1

The MIPI Graphics Expansion Board 1 features an 854 x 480 TFT LCD with capacitive touch overlay.

The MIPI Graphics Expansion Board 1 connects to the EK-RA8P1 via the MIPI graphics expansion port (J32) as seen in Figure 40. Please ensure SW4-6 is ON before connecting the MIPI Graphics Expansion Board 1. Refer to Table 34 for the MIPI graphics expansion port assignments

Table 34. MIPI Graphics Expansion Port Assignments

MIPI Expansion Port Assignments		**EK-RA8P1**
Pin	**Description**	**Signal/Bus**
J32-1	GND	GND
J32-2	GND	GND
J32-3	MIPI_DL0_P	MIPI_DSI_DL0_P
J32-4	MIPI_DL1_P	MIPI_DSI_DL1_P
J32-5	MIPI_DL0_N	MIPI_DSI_DL0_N
J32-6	MIPI_DL1_N	MIPI_DSI_DL1_N
J32-7	GND	GND
J32-8	GND	GND
J32-9	MIPI_CL_P	MIPI_DSI_CL_P
J32-10	MIPI_DSI_TE	P411
J32-11	MIPI_CL_N	MIPI_DSI_CL_N
J32-12	GND	GND
J32-13	GND	GND
J32-14	I^2C SDA	P511 (SDA1)
J32-15	DISP_BLEN	P514
J32-16	I^2C SCL	P512 (SCL1)
J32-17	DISP_INT	P111 (IRQ-19)
J32-18	DISP_RST	P606
J32-19	GND	GND
J32-20	GND	GND
J32-21	+1.8 V	+1.8 V
J32-22	+1.8 V	+1.8 V
J32-23	+3.3 V	+3.3 V
J32-24	+3.3 V	+3.3 V
J32-25	+5 V	+5 V
J32-26	+5 V	+5 V

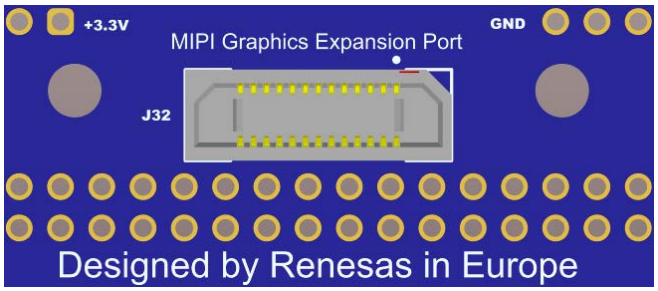

Figure 39. MIPI Graphics Expansion Port

Downloaded from Arrow.com.

8.2.1 Connecting the MIPI Graphics Expansion Board 1 to the EK-RA8P1 Board

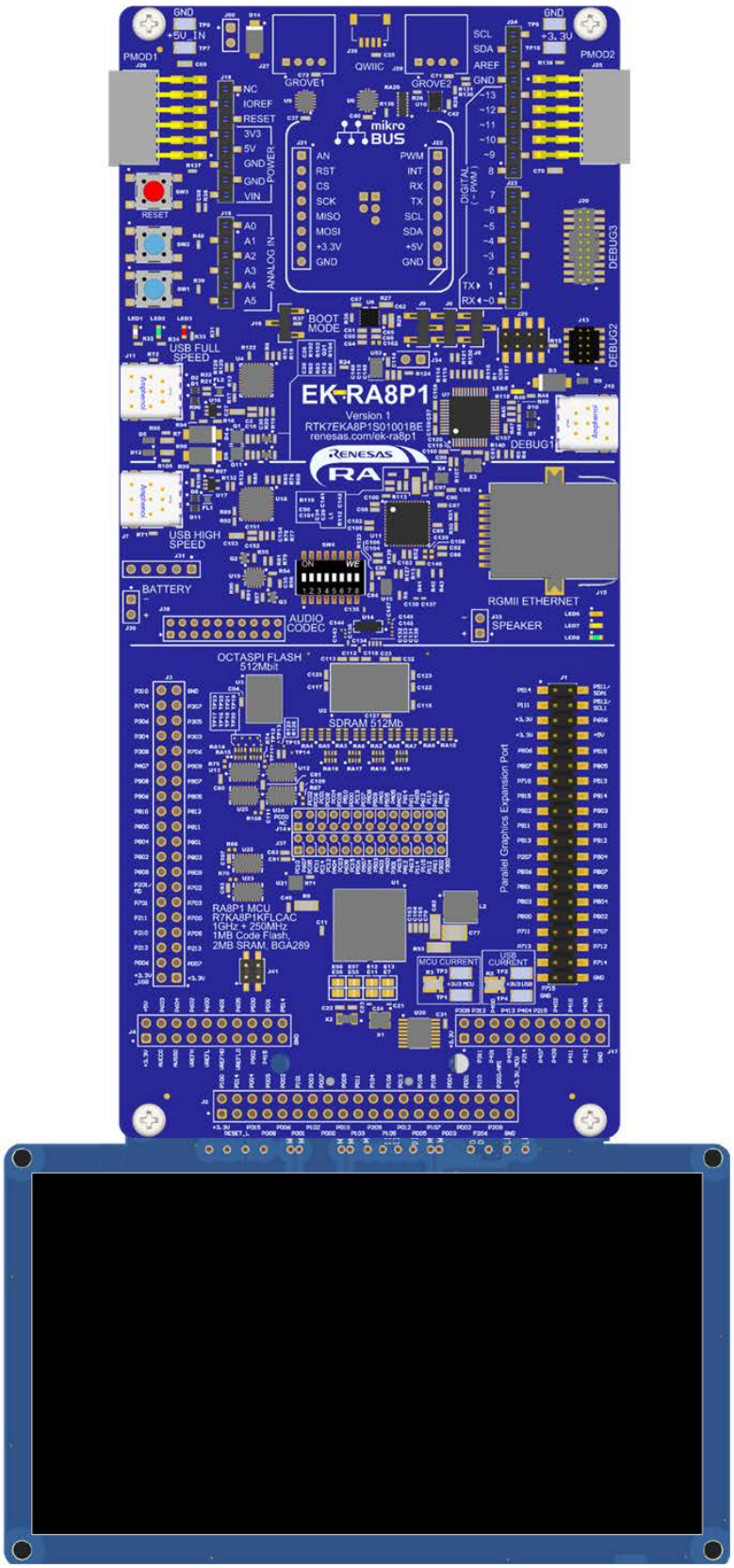

Figure 40. MIPI Graphics Expansion Board 1 connected to the EK-RA8P1

Downloaded from Arrow.com.

8.3 Camera Expansion Board

The Camera Expansion Board features a 2592×1944 high dynamic range image sensor. MIPI CSI (Camera Serial Interface) and DVP (Digital Video Port) protocols are both supported.

The Camera Expansion Board connects to the EK-RA8P1 via the FFC connector (J35) as seen in Figure 42. By default SW4-6 is OFF which allows the camera to be used in MIPI (CSI) mode, SW4-6 ON allows the camera to be used in parallel (DVP) mode. Refer to Table 35 for the Camera Expansion Port assignments in parallel mode and Table 36 for MIPI mode.

The RA MCU Capture Engine Unit (CEU) supports 8-bit or 16-bit data and operates in 8-bit mode with the Camera Expansion Board. The eight most significant bits output by the camera module are mapped onto the 8-bit capture port of the CEU.

Note that P405 and P406 are shared with the audio CODEC, therefore, the camera cannot be used at the same time as the audio CODEC. J41 has been provided to disconnect the CODEC from P405 and P406 when the parallel camera is being used. Also note that the parallel (DVP) camera mode cannot be used at the same time as the Parallel Graphics Expansion Board 1.

(Port assignment table on next page)

Downloaded from Arrow.com.

Table 35. Camera Expansion Port Assignments in Parallel mode (SW4-6 ON)

Camera Expansion Port Assignments (Parallel)		EK-RA8P1
Pin	**Description**	**Signal/Bus**
J35-1	GND	GND
J35-2	CAM_D11	NC
J35-3	CAM_D10	NC
J35-4	GND	GND
J35-5	CAM_D9	P703 (D7)
J35-6	CAM_D8	P702 (D6)
J35-7	GND	GND
J35-8	CAM_D7	P701 (D5)
J35-9	CAM_D6	P700 (D4)
J35-10	GND	GND
J35-11	CAM_D5	P406 (D3)
J35-12	CAM_D4	P405 (D2)
J35-13	GND	GND
J35-14	CAM_D3	P902 (D1)
J35-15	CAM_D2	P400 (D0)
J35-16	GND	GND
J35-17	CAM_D1	NC
J35-18	CAM_D0	NC
J35-19	GND	GND
J35-20	I^2C SCL	P512 (SCL1)
J35-21	I^2C SDA	P511 (SDA1)
J35-22	GND	GND
J35-23	CAM_VSYNC	PB02
J35-24	CAM_HSYNC	PB03
J35-25	CAM_RST	P709
J35-26	CAM_XCLK	P501
J35-27	CAM_PCLK	PB04
J35-28	CAM_INT	P010 (IRQ-14)
J35-29	GND	GND
J35-30	GND	GND
J35-31	+3.3 V	+3.3 V
J35-32	GND	GND
J35-33	GND	GND
J35-34	+3.3 V	+3.3 V
J35-35	+3.3 V	+3.3 V
J35-36	+3.3 V	+3.3 V
J35-37	GND	GND
J35-38	GND	GND
J35-39	+3.3 V	+3.3 V
J35-40	GND	GND

Downloaded from Arrow.com.

Table 36. Camera Expansion Port Assignments in MIPI mode (SW4-6 OFF)

Camera Expansion Port Assignments (MIPI)		EK-RA8P1
Pin	**Description**	**Signal/Bus**
J35-1	GND	GND
J35-2	NC	NC
J35-3	NC	NC
J35-4	GND	GND
J35-5	MIPI_DL1_P	MIPI_CSI_DL1_P
J35-6	MIPI_DL1_N	MIPI_CSI_DL1_N
J35-7	GND	GND
J35-8	MIPI_CL_P	MIPI_CSI_CL_P
J35-9	MIPI_CL_N	MIPI_CSI_CL_N
J35-10	GND	GND
J35-11	MIPI_DL0_P	MIPI_CSI_DL0_P
J35-12	MIPI_DL0_N	MIPI_CSI_DL0_N
J35-13	GND	GND
J35-14	NC	NC
J35-15	NC	NC
J35-16	GND	GND
J35-17	NC	NC
J35-18	NC	NC
J35-19	GND	GND
J35-20	I^2C SCL	P512 (SCL1)
J35-21	I^2C SDA	P511 (SDA1)
J35-22	GND	GND
J35-23	NC	NC
J35-24	NC	NC
J35-25	RESET	P709
J35-26	XCLK	P501
J35-27	NC	NC
J35-28	CAM_INT	P010 (IRQ-14)
J35-29	GND	GND
J35-30	GND	GND
J35-31	+3.3 V	+3.3 V
J35-32	GND	GND
J35-33	GND	GND
J35-34	+3.3 V	+3.3 V
J35-35	+3.3 V	+3.3 V
J35-36	+3.3 V	+3.3 V
J35-37	GND	GND
J35-38	GND	GND
J35-39	+3.3 V	+3.3 V
J35-40	GND	GND

Downloaded from Arrow.com.

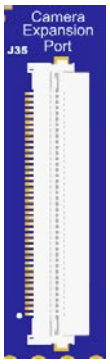

Figure 41. Camera Expansion Board Port

8.3.1 Connecting the Camera Expansion Board to the EK-RA8P1 Board

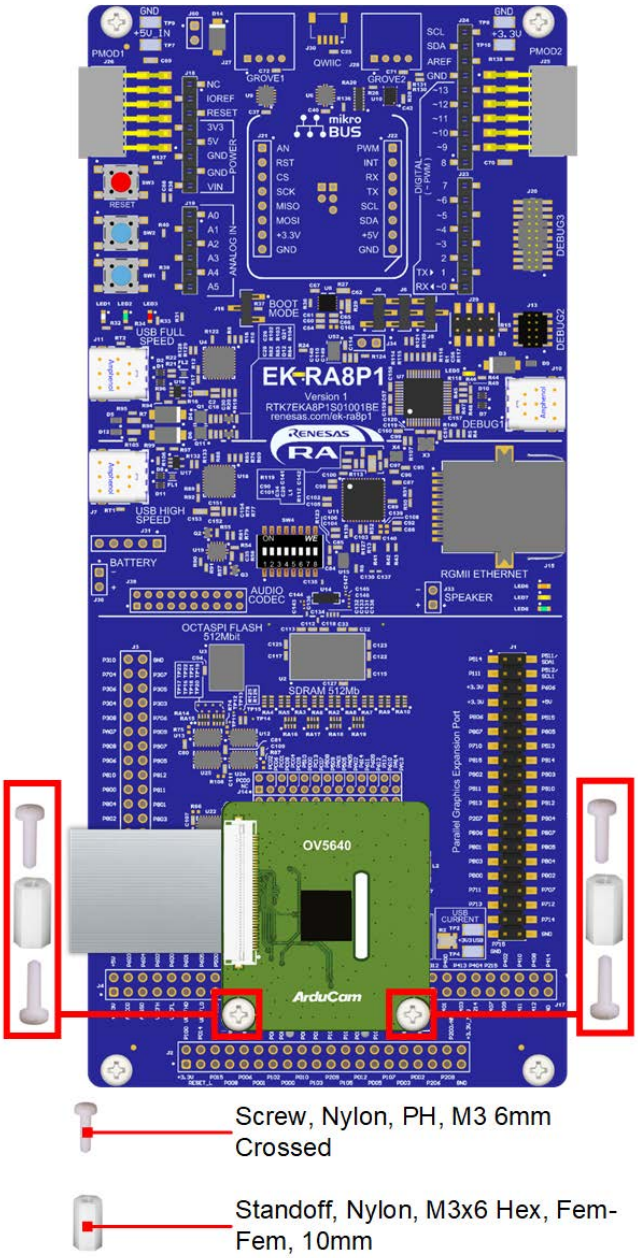

Figure 42. Camera Expansion Board connected to the EK-RA8P1

Downloaded from Arrow.com.

9. Certifications

The EK-RA8P1 v1 kit meets the following certifications/standards. See page 3 of this user's manual for the disclaimer and precautions.

9.1 EMC/EMI Standards

- FCC Notice (Class A)

  This device complies with part 15 of the FCC Rules. Operation is subject to the following two conditions: (1) This device may not cause harmful interference, and (2) this device must accept any interference received, including interference that may cause undesired operation.

  NOTE- This equipment has been tested and found to comply with the limits for a Class A digital device, pursuant to Part 15 of the FCC Rules. These limits are designed to provide reasonable protection against harmful interference in a residential installation. This equipment generates, uses and can radiate radio frequency energy and, if not installed and used in accordance with the instructions, may cause harmful interference to radio communications. However, there is no guarantee that interference will not occur in a particular installation. If this equipment does cause harmful interference to radio or television reception, which can be determined by turning the equipment off and on, the user is encouraged to try to correct the interference by one or more of the following measures:

  — Reorient or relocate the receiving antenna.
  — Increase the separation between the equipment and receiver.
  — Connect the equipment into an outlet on a circuit different from that to which the receiver is connected.
  — Consult the dealer or an experienced radio/television technician for help.
- Innovation, Science and Economic Development Canada ICES-003 Compliance:
  CAN ICES-3 (A)/NMB-3(A)
- CE Class A (EMC)

  This product is herewith confirmed to comply with the requirements set out in the Council Directives on the Approximation of the laws of the Member States relating to Electromagnetic Compatibility Directive 2014/30/EU.

  Warning – This is a Class A product. In a domestic environment this product may cause radio interference in which case the user may be requried to take adequate measures to correct this interference.
- UKCA Class A (EMC)

  This product is in conformity with the following relevant UK Statutory Instrument(s) (and its amendments): 2016 No. 1091 Electromagnetic Compatibility Regulations 2016.

  Warning – This is a Class A product. In a domestic environment this product may cause radio interference in which case the user may be requried to take adequate measures to correct this interference.
- Taiwan: Chinese National Standard 13438, C6357 compliance, Class A limits
- Australia/New Zealand AS/NZS CISPR 32:2015, Class A

9.2 Material Selection, Waste, Recycling and Disposal Standards

- EU RoHS
- WEEE Directive (2012/19/EU) & The Waste Electrical and Electronic Equipment Regulations 2013

- The WEEE (Waste Electrical and Electronic Equipment) regulations put responsibilities on producers for the collection and recycling or disposal of electrical and electronic waste. Return of WEEE under these regulations is applicable in the UK and European Union.

- This equipment (including all accessories) is not intended for household use. After use the equipment cannot be disposed of as household waste, and the WEEE must be treated, recycled and disposed of in an environmentally sound manner.

- Renesas Electronics Europe GmbH can take back end of life equipment. Register for this service at;
- https://www.renesas.com/eu/en/support/regional-customer-support/weee
- China SJ/T 113642014, 10-year environmental protection use period.

Downloaded from Arrow.com.

9.3 Safety Standards

- UL 94V-0

Downloaded from Arrow.com.

10. Design and Manufacturing Information

The design and manufacturing information for the EK-RA8P1 v1 kit is available in the "EK-RA8P1 v1 Design Package" available on renesas.com/ek-ra8p1.

- Design packages
  - EK-RA8P1 Board design package: ek-ra8p1-v1-designpackage.zip
  - Parallel Graphics Expansion Board 1 design package: app_lcd-ek_par_1-v1-designpackage.zip
  - MIPI Graphics Expansion Board 1 design package: app_lcd-ek_mipi_1-v1-designpackage.zip

Table 37. EK-RA8P1 Board Design Package Contents

File Type	Content	File/Folder Name
File (PDF)	Schematics	ek-ra8p1-v1-schematics
File (PDF)	Mechanical Drawing	ek-ra8p1-v1-mechdwg
File (PDF)	3D Drawing	ek-ra8p1-v1-3d
File (PDF)	BOM	ek-ra8p1-v1-bom
Folder	Manufacturing Files	Manufacturing Files
Folder	Design Files	Design Files - Altium

Table 38. Parallel Graphics Expansion Board 1 Design Package Contents

File Type	Content	File/Folder Name
File (PDF)	Schematics	app_lcd-ek_par_1-v1-schematics
File (PDF)	Mechanical Drawing	app_lcd-ek_par_1-v1-mechdwg
File (PDF)	3D Drawing	app_lcd-ek_par_1-v1-3d
File (PDF)	BOM	app_lcd-ek_par_1-v1-bom
Folder	Manufacturing Files	Manufacturing Files
Folder	Design Files	Design Files - Altium

Table 39. MIPI Graphics Expansion Board 1 Design Package Contents

File Type	Content	File/Folder Name
File (PDF)	Schematics	app_lcd-ek_mipi_1-v1-schematics
File (PDF)	Mechanical Drawing	app_lcd-ek_mipi_1-v1-mechdwg
File (PDF)	3D Drawing	app_lcd-ek_mipi_1-v1-3d
File (PDF)	BOM	app_lcd-ek_mipi_1-v1-bom
Folder	Manufacturing Files	Manufacturing Files
Folder	Design Files	Design Files - Altium

11. Website and Support

Visit the following URLs to learn about the kit and the RA family of microcontrollers, download tools and documentation, and get support.

EK-RA8P1 Resources	renesas.com/ek-ra8p1
RA Kit Information	renesas.com/ra/kits
RA Product Information	renesas.com/ra
RA Product Support Forum	renesas.com/ra/forum
RA Videos	renesas.com/ra/videos
Renesas Support	renesas.com/support
RA Flexible Software Package (FSP)	renesas.com/fsp

Downloaded from Arrow.com.

Revision History

Rev.	Date	Description	
		Page	Summary
1.00	May.30.25	—	MP Release
1.01	Jun.17.25	—	Minor Updates
1.02	Jul.30.25	5, 10, 25, 33, 40, 50	Updated section1, 3, 5.3.1, 6.1, 7 and 8.3.1.
1.03	Aug.12.25	9	Updated section 2
1.04	Oct.10.25	34, 49, 51	Updated Table 36, Section 6.2 and Section 9.2

Downloaded from Arrow.com.

EK-RA8P1 v1 – User's Manual

Publication Date: Oct.10.25

Published by: Renesas Electronics Corporation

Downloaded from Arrow.com.

EK-RA8P1 v1 – User's Manual

Renesas Electronics Corporation

R20UT5309EG0104

Downloaded from Arrow.com.