DWG. NO.
SE94890

CATALOG NO.	BOEING PART NUMBER	MATING END SIZE	ØA	ØB	ØC ±.0015 ±[0.038]	ØE ±.001 ±[0.03]	ØG	ØH ±.003 ±[0.08]	(L)	M ±.002 ±[0.05]	N	X ±.002 ±[0.05]	RAD Y	Z ±.003 ±[0.08]	COLOR BAND 2 A	COLOR BAND 2 B	COLOR BAND 2 C	WIRE ACCOMMODATE AWG	CRIMP TOOLING SOURIAU	CRIMP TOOLING MIL-C-22520 CRIMP TOOL	CRIMP TOOLING POSITIONER
RBM20M-1DJ5 1	S280W555-920	16	.077±.001 [1.96±0.03]	.049±.001 [1.24±0.03]	.1015 [2.578]	.062 [1.57]	.062±.002 [1.57±0.05]	.029 [0.74]	.418 [10.62]	.213 [5.41]	.1715±.0145 [4.356±0.368]	.031 [0.79]	.020 [0.51]	.060 [1.52]	RED	RED	RED	20-24		MIL-C-22520/1-01	MIL-C-22520/1-02 RED
																				MIL-C-22520/2-01	MIL-C-22520/2-11
RBM18M-1DJ5 5	S280W555-918	16	.0796±.0008 [2.0218±0.020]	.0544±.0008 [1.382±0.020]			.065±.002 [1.65±0.05]								RED	WHITE	RED	18-20		MIL-C-22520/1-01	MIL-C-22520/1-02 RED
																				MIL-C-22520/2-01	MIL-C-22520/2-11
RBM16V-1DJ5 1	S280W555-916	14	.103±.002 [2.62±0.05]	.067±.001 [1.70±0.03]	.1315 [3.340]	.077 [1.96]	.085 [2.16]	.039 [0.99]	.501 [12.73]	.296 [7.52]	.2655±.0155 [6.744±0.394]	.046 [1.17]	.030 [0.76]	.076 [1.93]	BLUE	BLUE	BLUE	16-20		MIL-C-22520/1-01	MIL-C-22520/1-02 BLUE

NOTES: UNLESS OTHERWISE SPECIFIED

1. THESE CONTACTS CONFORM TO MIL-C-39029/1-___ EXCEPT FOR COLOR BANDING.
2. COLOR BANDS IDENTIFY THE WIRE SIZE ACCOMODATION OF THIS ITEM WHICH CONFORMS TO BOEING STANDARD S280W555-9___.
3. MATERIAL: BRASS.
4. FINISH: 50 MICROINCHES [1.27 MICRONS] MIN. GOLD OVER 75 MICROINCHES [1.91 MICRONS] MIN. NICKEL OVER COPPER FLASH.
5. RBM18M-1DJ5 SAME AS RBM20M-1DJ5, EXCEPT CRIMP BARREL HAS BEEN CHANGED TO ACCOMODATE 18-20 AWG.

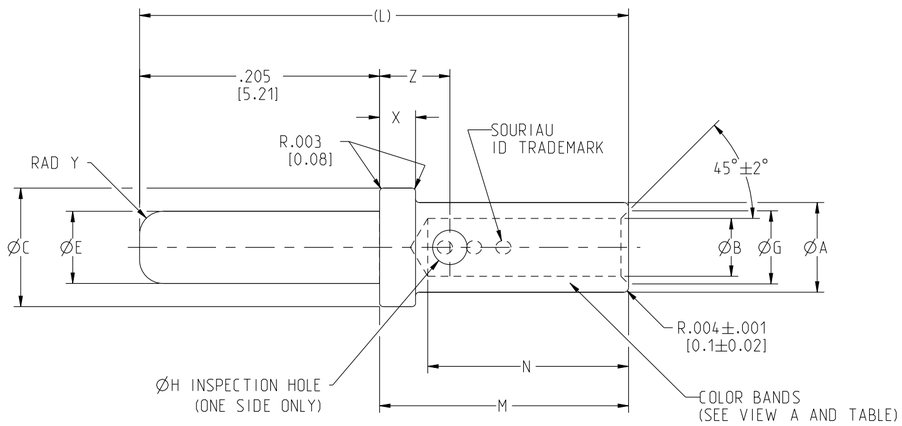

RBM20M-1DJ5 SHOWN
SIZE 20 WIRE BARREL

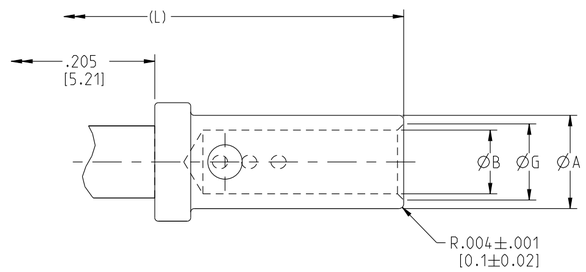

RBM18M-1DJ5 SHOWN
SIZE 18 WIRE BARREL

CATALOG DESCRIPTION

RBM __ _ - 1 DJ5

WIRE SIZE

PLATING DESIGNATOR

MATING END SIDE
M: Ø.062
V: Ø.077

VARIATION
-1: STANDARD

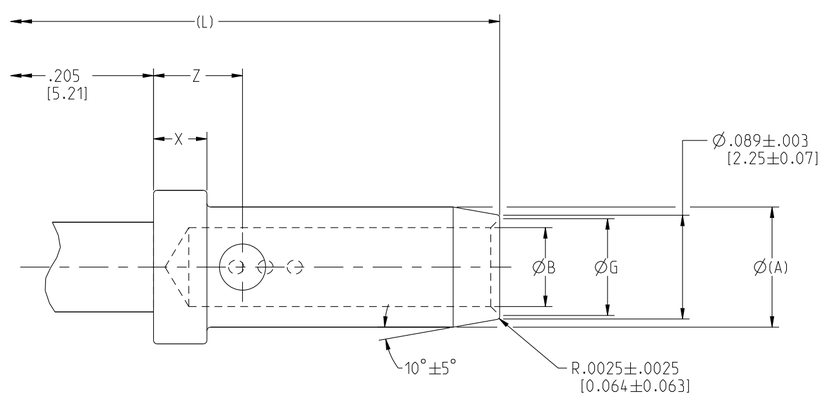

RBM16V-1DJ5 SHOWN
SIZE 16 WIRE BARREL

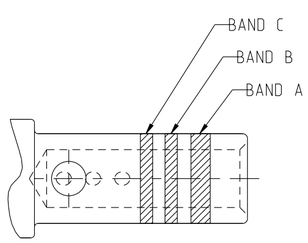

VIEW A
COLOR BANDS 2
(SEE TABLE)

REV	DESCRIPTION	BY DATE	CHKD DATE
F	REVISED PER ECN 12121	RSK 01-17-14	SDH 01-17-14
E	REVISED PER ECN 12046	RSK 08-22-13	SDH 08-22-13

DRAWING TITLE
CRIMP PIN CONTACTS

CAT NO.
RBM___-1DJ5 (SEE TABLE)

CAGE NO: 09922 | SIZE: C

APPROVAL		
DRAWN:	RSK	07-24-13
CHKD :	SDH	07-24-13
DSGN :	RS	04-08-92
MFG :	DH	07-24-13
QC :	BB	07-24-13

DRAWING SCALE: 10:1
DRAWING NO. SE94890 REV F
1 OF 1

CUSTOMER

INTERPRET THIS DRAWING IN ACCORDANCE WITH ASME Y14.5M - 1994.

SOURIAU
WWW.SOURIAU.COM

LINEAR MEASURE: INCH mm INCH [mm]
THIRD ANGLE PROJECTION

TOLERANCES UNLESS OTHERWISE SPECIFIED

No. OF PLACES	INCH [mm]
ONE PLACE	±.1 [±3]
TWO PLACES	±.02 [±0.5]
THREE PLACES	±.010 [±0.25]
ANGLES	±1°

PRO-E

THIS DRAWING IS A CONTROLLED DOCUMENT FOR SOURIAU USA. INC. IT'S SUBJECT TO CHANGE WITHOUT NOTICE. CONTACT THE DOCUMENT CONTROL CENTER FOR THE LATEST REVISION.

THE INFORMATION CONTAINED IN THIS DRAWING IS CONFIDENTIAL AND MAY NOT BE DISCLOSED WITHOUT WRITTEN CONSENT FROM SOURIAU USA. INC.

Downloaded from Arrow.com.