REVISIONS					
REV	ECO	DESCRIPTION	DATE	BY	APPR
A3	-	RELEASE NEW DWG FORMAT	07/30/13	DRP	-
A4	-	CONTACT INFORMATION UPDATED	01/16/14	DRP	-

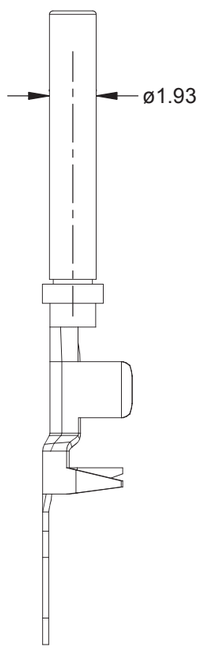

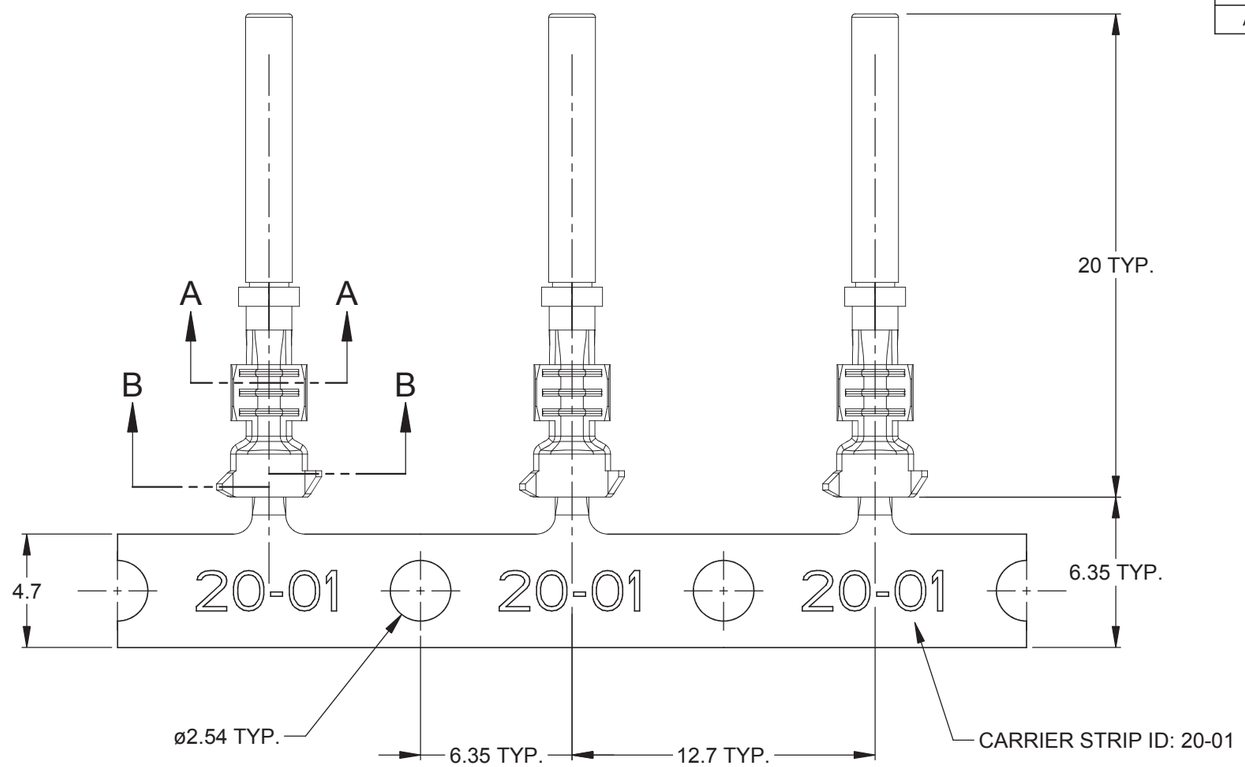

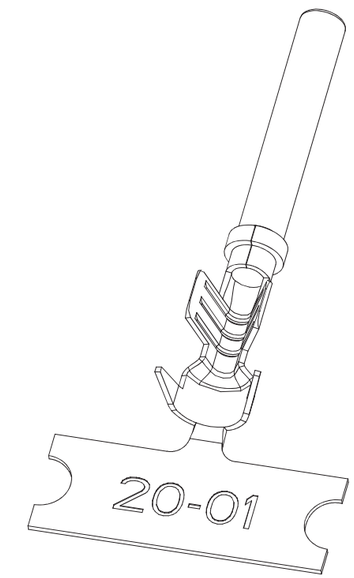

NOTES: UNLESS OTHERWISE SPECIFIED

1. MATERIAL: COPPER ALLOY

2. PLATING: SEE PART NUMBER CHART

3. CONTACT SIZE: 20

4. SPECIFICATIONS:
   4.1 CURRENT RATING: 7.5 AMPS
   4.2 CONTACT MILLIVOLT DROP: 100 MILLIVOLT DROP MAXIMUM AT 7.5 AMP TEST CURRENT.
   4.3 RoHS COMPLIANT

5. RECOMMENDED WIRE RANGE: 16 - 22 AWG

6. PACKAGE: 4000PCS/REEL

7. AVAILABLE APPLICATORS: MFX-3974-K OR MFX-3974-G

8. ALL DIMENSIONS ARE FOR REFERENCE USE ONLY

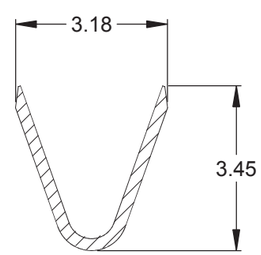

SECTION A-A

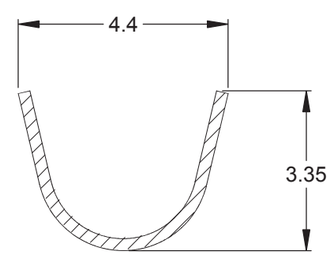

SECTION B-B

PART NUMBER CHART	
PLATING	PART NUMBER
NICKEL	AT62-20-0122
GOLD	AT62-20-0144

	SEE PART NUMBER CHART		
	PART NUMBER	DESCRIPTION	ITEM
QUANTITY	MATERIALS LIST		

UNLESS OTHERWISE SPECIFIED
1) All dimensions are in metric(mm).
2) Tolerances are as follows:
1 PL DEC ±0.30
2 PL DEC ±0.15
3 PL DEC ±0.08
Fractions ±1/64
Angles ±1°
3) Note reference = X

MATERIAL SPECIFICATIONS:

PROCESS SPECIFICATIONS:

NEXT ASS'Y:

SIGNATURES		DATE
DRAWN:	D.PARKS	07/30/13
CHECKED:		
ENGINEER:		
APPROVAL:		
CUSTOMER:		

THIS DRAWING IS SUPPLIED FOR INFORMATION ONLY. DESIGN FEATURES, SPECIFICATIONS AND PERFORMANCE DATA SHOWN HEREON ARE THE PROPERTY OF THE AMPHENOL CORPORATION. NO RIGHTS OF REPRODUCTION ARE IMPLIED. ALL DIMENSIONS ARE SUBJECT TO NORMAL MANUFACTURING VARIATIONS.

SINE Systems Corporation
A Subsidiary of Amphenol Corporation
44724 Morley Drive
Clinton Township, MI 48036

CONTACT, SOCKET, STAMPED,
SIZE 20, 16-22 AWG, ATM SERIES

SIZE	FSCM NO.	DWG NO:	REVISION
B	—	C- AT62-20-01XX	A4

SCALE: NONE SHEET 1 OF 1

TITLE: SOCKET, STAMPED, SIZE 20, 16-22 AWG, ATM SERIES
DWG NO: C- AT62-20-01XX
REV: A4
SH: 1
OF: 1

Downloaded from Arrow.com.