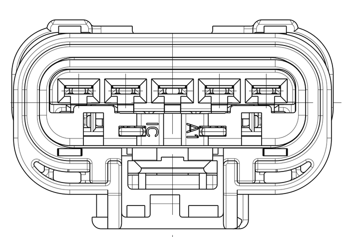

END VIEW
W/O CPA

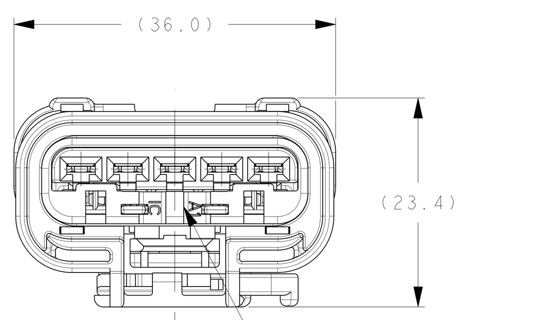

END VIEW
W/CPA

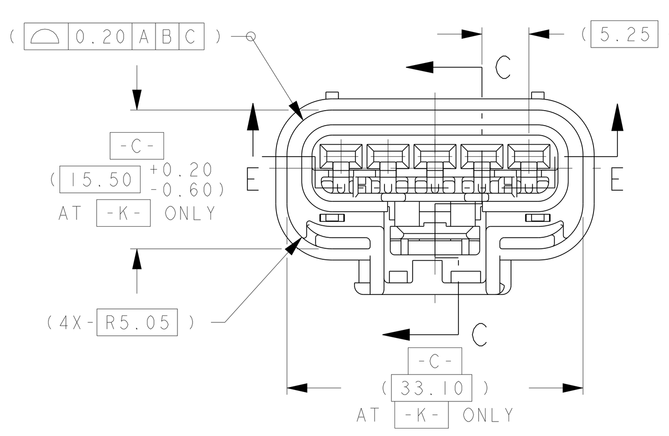

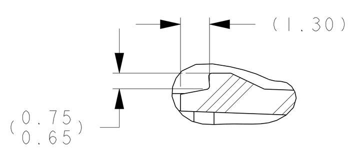

DETAIL Y
TERM.LOCK,FINGER
SCALE 5X

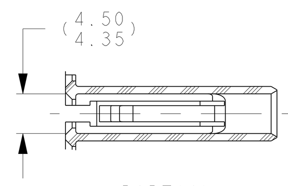

PARTIAL
SECTION B-B

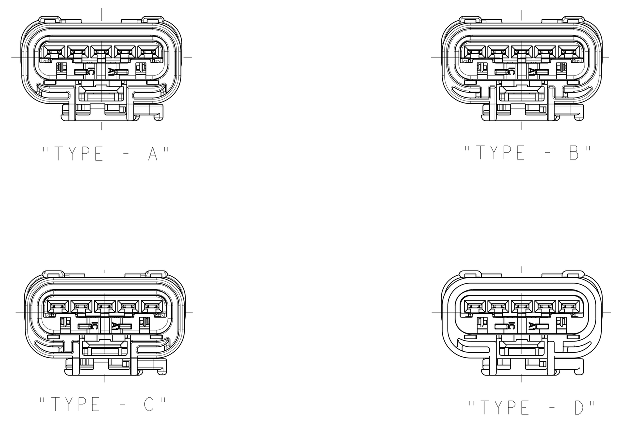

"TYPE - A" "TYPE - B" "TYPE - C" "TYPE - D"

POLARIZATION OPTIONS SHOWN WITH CPA FULL SIZE

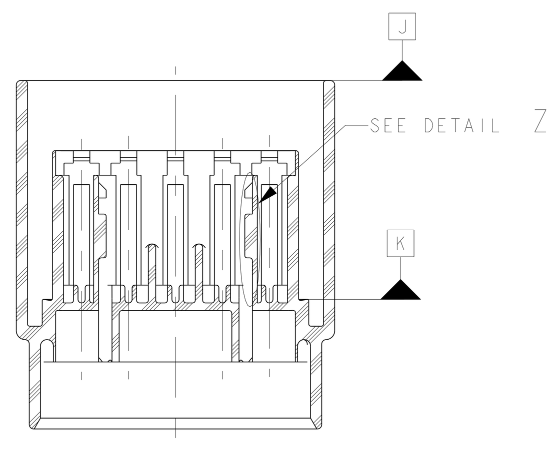

SECTION E-E

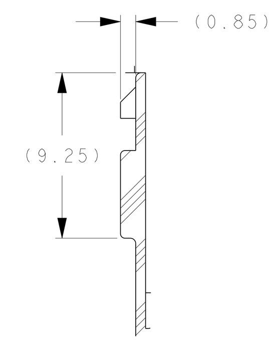

DETAIL Z
SCALE 4X

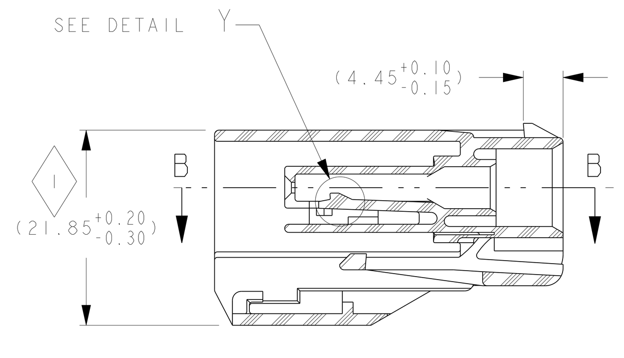

SECTION C-C

INSULATOR VIEWS AND DIMENSIONS FOR REFERENCE ONLY

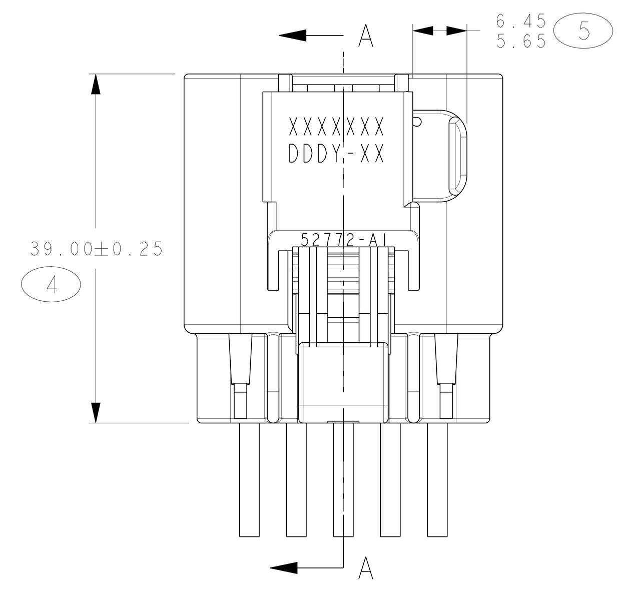

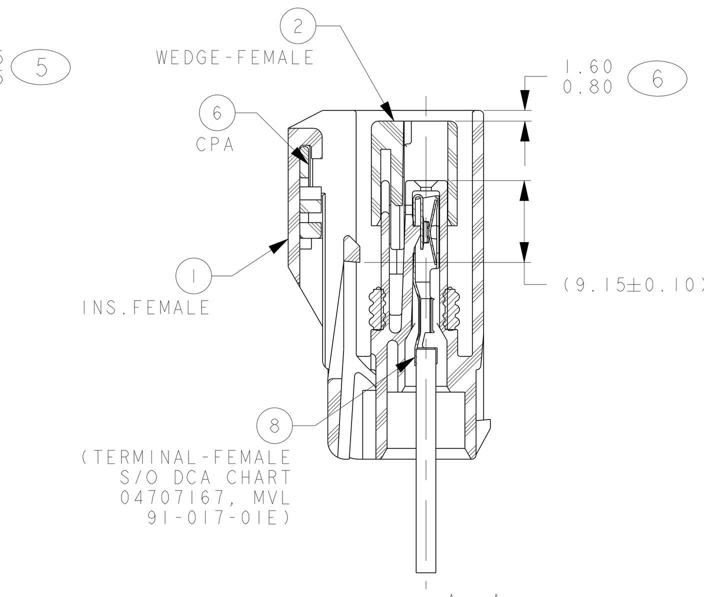

SECTION A-A

UNSEALED ASSEMBLY VIEWS SHOWN WITHOUT CPA AND RETAINER

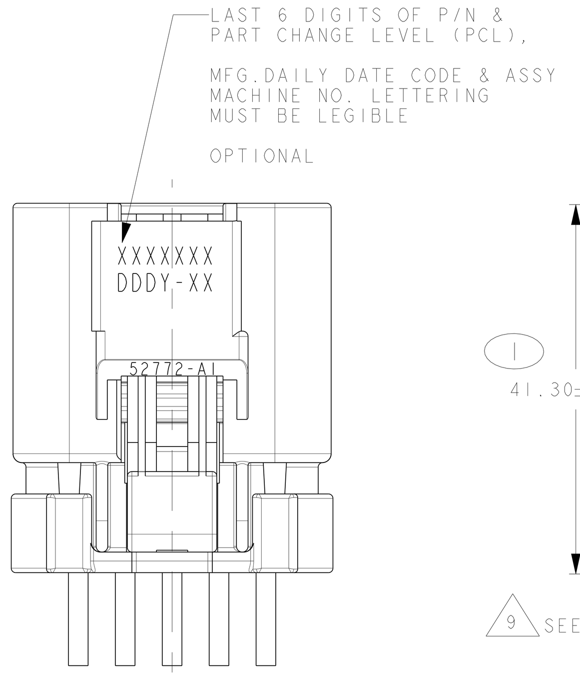

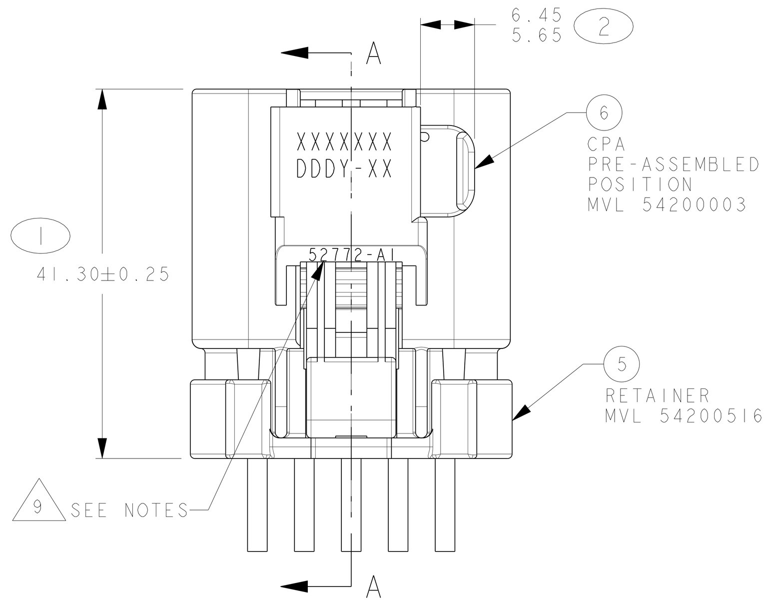

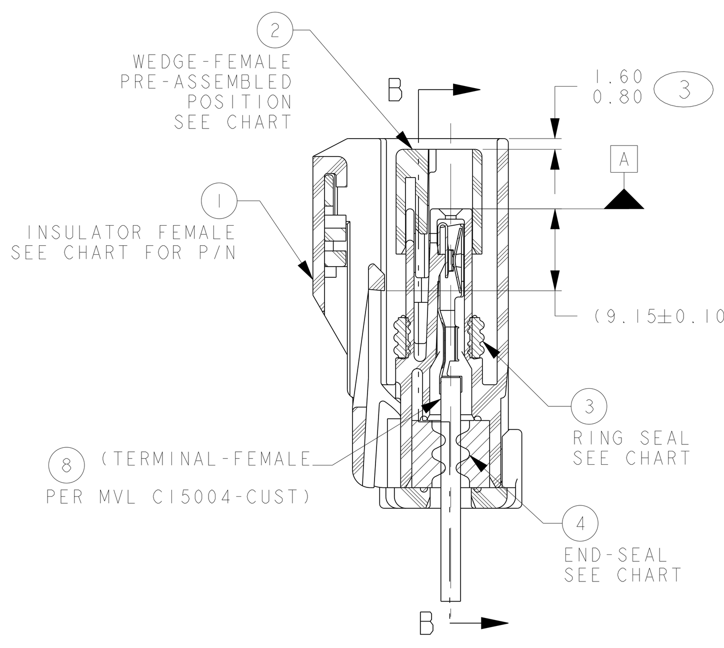

SECTION A-A

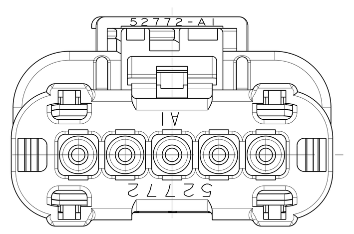

WITHOUT CPA

SEE P/N CHART
ALL DIMENSIONS SAME
AS WITH CPA VIEWS

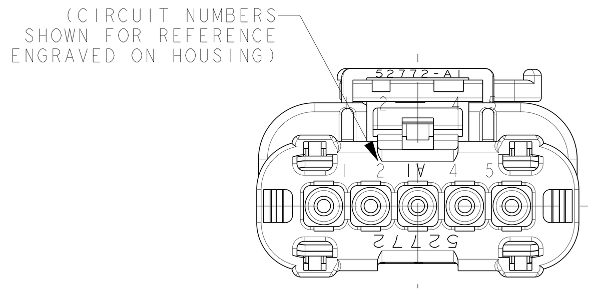

SEALED ASSEMBLY VIEWS

SEE P/N CHART
SHOWN WITH CPA

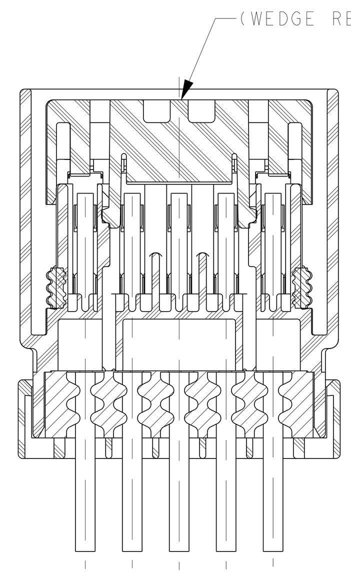

SECTION B-B

NOTES:

1. QUALITY ASSURANCE REQUIREMENTS PER CHRYSLER PS-7300: 1◇
SPC DATA REQUIRED

2. ENGINEERING APPROVAL OF SUPPLIER SAMPLES IS REQUIRED PRIOR TO AUTHORIZATION OF PART PRODUCTION

3. CHANGES IN DESIGN COMPOSITION OR PROCESSING FROM THE PART PREVIOUSLY APPROVED FOR PART PRODUCTION REQUIRES PRIOR ENGINEERING APPROVAL

4. WIRING FABRICATORS MUST PURCHASE FROM SOURCES SHOWN

5. ALL THE SEALED CONNECTOR APPLICATONS MUST BE USED WITH CHRYSLER WIRE SPEC. MS-8288, MS-9502 OR FORD ESB-MIL123-A THIN WALL X-LINK 20, 18, 16 & 14 GAGE WIRES ONLY. UNLESS OTHERWISE SPECIFIED WIRE INSULATIONS (Ø1.70 MIN TO Ø2.77 MAX). ISO THIN WALL EQUIVALENTS ACCEPTABLE

6. ALL NON-SEALED APPLICATIONS MAY BE USED WITH ANY WIRE INSULATION 22 GAGE THRU 10 GAGE (EXCEPT AS NOTED) PROVIDING THAT A TERMINAL GRIP FOR THAT CORE/INSULATION COMBINATION IS SHOWN ON THE FEMALE TERMINAL DRAWING ISO THIN WALL EQUIVALENTS ACCEPTABLE

MAX. INSULATION CRIMP WIDTH = 4.50
MAX. INSULATION CRIMP HEIGHT = 4.50
MAX. INSULATION DIA. = 4.09 (10 GA THIN WALL)

7. USE WITH CAVITY PLUG MVL 54200005 DPN 15316894 WHEN REQ'D
USE WITH 2.80MM APEX FEMALE TERMINAL PER MVL C15004-CUST
SYMMETRICAL ABOUT CENTERLINE FOR 180° ORIENTATION

8. DIRECT CONNECT DRAWING NO. G36005, USCAR/EWCAP 280-S-005-1-Z01 & (CHRYSLER 04793884AA)

9. TEST METHOD PER CHRYSLER PERFORMANCE SPEC# PF-9600, CONNECTOR ENGAGE & DISENGAGE WITH LATCH DEPRESSED FORCE NOT TO EXCEED 90N FOR THIS SYSTEM

CPA SEATING FORCES - 40N MAX
WEDGE SEATING FORCES - 100N MAX

10. SUPPLIER, MOLD & CAVITY I.D. SIGNIFIES TOOL OWNERSHIP, FOR REFERENCE

11. ANNUAL QUALITY REQUIREMENTS:
IT IS PERMISSIBLE TO PERFORM CONTINUOUS CONFORMANCE PER MVL SPECIFICATION #AQA-001 INSTEAD OF ANNUAL LAYOUT & ANNUAL PV REQUIREMENTS OF QS-9000 SECTION 2 & PF-9600

ALL NON-REFERENCE DIMENSIONS ARE REQUIRED

DIMENSIONAL AS NOTED BELOW:

- USE INDEX A, BLACK SEALED AND UNSEALED FOR ALL AFFECTED INSULATOR CAVITIES

- CURRENT PRODUCTION TOOLING

- POINT OF LAST RUN

CONNECTOR VALIDATED TO PF-9600 WITH THE FOLLOWING EXCEPTIONS:
TEST 5.3.4 VIBRATION/MECHANICAL SHOCK,TEST 5.3.9 THERMAL SHOCK, TEST 5.3.10 TEMPERATURE/HUMIDITY CYCLING AND TEST 5.3.11 HIGH TEMPERATURE EXPOSURE

SERVICE TOOLING GUIDE INFORMATION PER APEX TRAINING MANUAL

12. MUST CONFORM TO THE FOLLOWING CHRYSLER/YNA STANDARDS:

PF-9600 PERFORMANCE (CHRYSLER) EXCEPT AS NOTED ABOVE
PS-7300 QUALITY ASSURANCE (CHRYSLER)
PS-4480-CEK-4 (CHRYSLER PART I.D., (G-009-2 YNA)
PS-9065 REGRIND (CHRYSLER), (G-009-3 YNA)
PS-9227 DATA EXCHANGE (CHRYSLER), (G-009-7 YNA)
PS-10052 INFORMATION SECURITY (CHRYSLER)

13. THIS DRAWING (MVL H59006) REPLACES CHRYSLER DRAWING NO 04793886AA LEVEL "C" CHRYSLER DRAWING IS FOR REFERENCE ONLY

14. MVL P/N WITH SUFFIX "N" DESIGNATES ASSEMBLIES W/O CPA

15. MVL SUPPLIER CODE: 52772 OR 52772H

CHART-ASSEMBLY PART NUMBERS

	UNSEALED W/O CPA				UNSEALED W/CPA				SEALED W/CPA				SEALED W/O CPA			
MVL PART NO.	54200517N	54200518N	54200519N	54200520N	54200517	54200518	54200519	54200520	54200521	54200522	54200523	54200524	54200521N	54200522N	54200523N	54200524N
PCL	F	F	F	F	F	F	F	F	F	F	F	F	F	F	F	F
DELPHI PART NO.	33513166	33513167	33513168	33513169	15437693	33513163	33513164	33513165	13849910	13927728	33511912	33511913	33513170	33513171	33513172	33513173
REV	01	01	01	01	01	01	01	01	01	01	01	01	01	01	01	01
CUSTOMER P/N'S	N/A	N/A	N/A	N/A	C 04793891AA F 7L7T-14A464-CA	C 04793892AA	C 04793893AA	C 04793894AA	C 04793887AA	C 04793888AA	C 04793889AA	C 04793890AA	N/A	N/A	N/A	N/A

REQUIRED								REQUIRED								ITEM	MVL	DELPHI	PART NAME	MATERIAL	COLOUR
1				1				1				1				1	54200505	33513158	INSULATOR INDEX A	PA66GF35	BLACK
	1				1				1				1			1	54200506	33513159	INSULATOR INDEX B	PA66GF35	LT GRY
		1				1				1				1		1	54200507	N/A	INSULATOR INDEX C	PA66GF35	DK GRY
			1				1				1				1	1	54200508	N/A	INSULATOR INDEX D	PA66GF35	NATURAL
1	1	1	1	1	1	1	1	1	1	1	1	1	1	1	1	2	54200513	33513160	WEDGE	PA66GF35	ROYAL BLUE
X	X	X	X	X	X	X	X	1	1	1	1	1	1	1	1	3	54200514	33513161	RING SEAL	SILICONE	RED
X	X	X	X	X	X	X	X	1	1	1	1	1	1	1	1	4	54200515	33517369	END SEAL	SILICONE	LT BLUE
X	X	X	X	X	X	X	X	1	1	1	1	1	1	1	1	5	54200516	33513162	RETAINER	PA66GF35	BLACK
X	X	X	X	1	1	1	1	1	1	1	1	X	X	X	X	6	54200003	15537297	CPA LATCH	PA66GF35	RED
3	3	3	3	3	3	3	3	3	3	3	3	3	3	3	3	CONNECTOR ASSEMBLY TEMPERATURE CLASS PER SAE/USCAR-2 REV 5					

MATING PART NUMBER CHART

INDEX TYPE	COLOR	SEALED/ UNSEALED	FEMALE ASSEMBLY MVL	FEMALE ASSEMBLY DELPHI	FEMALE ASSEMBLY CUSTOMER	MATING ASSEMBLY PART NUMBER FOR REFERENCE ONLY
D	NATURAL	UNSEALED	54200520N	33513169	N/A	DIRECT CONNECT APPLICATION
		UNSEALED	54200520	33513165	C 04793894AA	
		SEALED	54200524N	33513173	N/A	DIRECT CONNECT APPLICATION
		SEALED	54200524	33511913	C 04793890AA	
C	DK GREY	UNSEALED	54200519N	33513168	N/A	DIRECT CONNECT APPLICATION
		UNSEALED	54200519	33513164	C 04793893AA	
		SEALED	54200523N	33513172	N/A	DIRECT CONNECT APPLICATION
		SEALED	54200523	33511912	C 04793889AA	
B	LT GRY	UNSEALED	54200518N	33513167	N/A	DIRECT CONNECT APPLICATION
		UNSEALED	54200518	33513163	C 04793892AA	
		SEALED	54200522N	33513171	N/A	DIRECT CONNECT APPLICATION
		SEALED	54200522	13927728	C 04793888AA	
A	BLACK	UNSEALED	54200517N	33513166	N/A	DIRECT CONNECT APPLICATION
		UNSEALED	54200517	04793891AA	C 04793891AA F 7L7T-14A464-CA	
		SEALED	54200521N	33513170	N/A	DIRECT CONNECT APPLICATION
		SEALED	54200521	13849910	C 04793887AA	

LEGENDS:
MVL: MOTORIZED VEHICLE DIVISION
C: CHRYSLER
F: FORD

ECN-NO.	ZONE	CHANGE DESCRIPTION
13-01276	ALL	ECO 422555 - ADDED DELPHI P/N'S FOR MVL PARTS, ITC & CHRYSLER P/N'S REPLACED. ASSEMBLY PART NUMBER CHARTS UPDATED FCI REPLACE WITH MVL AND NOTES UPDATED
11-00155	ALL	REVISED AND REDRAWN IN PDS. P/N CHART AND NOTES UPDATED SEE REV F1 FOR PREVIOUS CHANGES FORD P/N 7L7T-14A464-CA ADDED

PRODUCT SPEC. APEX 2.8 | PACKAGING SPEC. - | APPLICATION SPEC. -

COPYRIGHT DELPHI CORPORATION AND/OR ITS AFFILIATES. ALL RIGHTS RESERVED. REVISED THIS DRAWING IS THE PROPERTY OF DELPHI CORPORATION AND CONTAINS DELPHI CONFIDENTIAL INFORMATION. THE REPRODUCTION, DISTRIBUTION AND UTILIZATION OF THIS DOCUMENT OR ITS RELATED CAD MATH DATA, AS WELL AS COMMUNICATION OF ANY CONTENT TO OTHERS, WITHOUT EXPRESS AUTHORIZATION, IS PROHIBITED.

TOLERANCES: SEE DWG
COUNTERPART Nr.: DEVICES
DO NOT MEASURE DRAWING
MATERIAL: SEE CHART
SURFACE FINISH: -
COLOUR: SEE CHART
TOOL NO. A068
ECO Loc. Code AN

DELPHI
DELPHI PACKARD ELECTRICAL/ELECTRONIC ARCHITECTURE
NOVI, MI

3RD ANGLE
DIMENSION IN MILLIMETERS
CAD SYSTEM: pro / eng.
DWG SIZE: A0

	DATE	NAME
CREATED BY	2005-11-09	A.UDHAYANAN
MODIFIED BY	2013/12/05	Sucha SIAN
CHECKED BY	2013/12/06	Matt MAJOR
APPROVED BY	2013/12/06	Bob CUE

TITLE: CHART - ASSEMBLY
5 - WAY FEMALE
PROJECT: 2.8 APEX CONNECTOR SYSTEM
ESR NO. USA-WT343
CAT. NO. -
DRAWING NUMBER: H59006
REV.: H
STATE: SERIAL RELEASED
PART NUMBER: See Table
REV.: -
APPROVAL LEVEL: -
SHEET 1 of 1
SCALE 2:1
FILE NAME H59006
DOCUMENT UNDER PDS CONTROL NO MODIFICATION ALLOWED OUTSIDE

Downloaded from Arrow.com.

EUR C04 112 F29 PDS