RRH46410

Digital Gas Sensor Module for Indoor Air Quality Applications

Description

The RRH46410 Gas Sensor family leverages the Renesas ZMOD4410 platform for new applications and markets with an integrated microcontroller. This sensor family is designed for measuring indoor air quality for various gas sensing applications with most convenient integration possibility.

The sensor module consists of a MEMS gas sensing element, CMOS signal conditioning IC, and microcontroller. The module's sensing element consists of a heater element on a Si-based MEMS structure and a metal oxide (MOx) chemiresistor. The signal conditioner controls the sensor temperature and measures the MOx conductivity, which is a function of the gas concentration. The microcontroller enables a calibrated digital output with no need to process data on the user's MCU.

With its low operating current consumption and multiple operating methods, the RRH46410 sensor modules are an excellent choice for low-voltage and low-power applications.

Applications

- Indoor air monitoring
- Monitor home, office, public building, personal, and bathroom environments for healthy conditions and comfort
- Detect hazardous materials and unhealthy conditions (for example, fumes from construction materials)
- Automation based on indoor ambient air quality (HVAC, air purifiers, thermostats, kitchen hoods, etc.)

Features

- Sensor output based on AI machine learning algorithm:
  - Absolute measurement of total organic compounds (TVOC) concentrations and indoor air quality (IAQ)
  - Absolute TVOC output to meet Public Building Air Quality (PBAQ) standards
  - Relative IAQ based on TVOC and odor changes
  - Estimated carbon dioxide level (eCO_2)
- Ultra-low power (ULP) consumption down to 226µW
- Siloxane resistant
- JEDEC JESD47 qualified for 10 years lifetime
- Supply voltage: 1.8V to 3.6V
- RoHS compliant
- Programmable GPIO pins
- Operating temperature -40°C to 85°C
- IP67 rating
- Package: 4.5 × 4.0 × 0.950 mm body, 0.50 pitch 20-LGA
- Supports I^2C and UART

Available Support

- Evaluation Kits for USB and PMOD™ board
- Manuals, application notes, and white papers
- Example codes, API

Figure 1. RRH46410 Gas Sensor

© 2023-2025 Renesas Electronics

Downloaded from Arrow.com.

Contents

1. Overview 4
- 1.1 Block Diagram 4
- 1.2 Typical Application 4
- 1.3 Product Family Overview 4

2. Pin Information 5
- 2.1 Pin Assignments 5
- 2.2 Pin Descriptions 5

3. Specifications 7
- 3.1 Absolute Maximum Ratings 7
- 3.2 Electrical Specifications 7

4. Sensor Module Characteristics 9
- 4.1 Gas Sensor Module 9

5. Gas Sensor Module Operation Modes and Characteristics 10
- 5.1 IAQ 2nd Generation (Absolute and Relative Measurement) 10
  - 5.1.1. Air Quality – IAQ Levels According to UBA 10
  - 5.1.2. Air Quality – Estimated Carbon Dioxide Correlation (eCO_2) 12
  - 5.1.3. Relative IAQ 12
  - 5.1.4. Accuracy and Consistency 13
- 5.2 Public Building Air Quality Standards (Absolute Measurement) 14
- 5.3 Conditioning, Sensor Self-Check Status, and Stability 15
- 5.4 Environmental Influences 17

6. Data Transmission Protocols 18
- 6.1 I^2C Interface 18
- 6.2 UART Interface 20

7. Commands 21
- 7.1 Error and Status Code 22
- 7.2 Requests and Responses 22
  - 7.2.1. Get Product ID 23
  - 7.2.2. Get Tracking Number 23
  - 7.2.3. Get Operation Mode 23
  - 7.2.4. Set Operation Mode 24
  - 7.2.5. Set Humidity 24
  - 7.2.6. Get Measurement Results 25
  - 7.2.7. Config GPIO 26
  - 7.2.8. Get GPIO 26
  - 7.2.9. Set GPIO 26
  - 7.2.10. Clear GPIO 27
  - 7.2.11. Read Debug Data 27
  - 7.2.12. Read Flash Shadow 28
  - 7.2.13. Write Flash Shadow 28
  - 7.2.14. Write Flash 28
  - 7.2.15. Reset 29

Downloaded from Arrow.com.

7.3 Data Flash 29
8. Assembly Restrictions, Operation, Integration Notes, and Storage 30
9. Test and Calibration 31
10. Package Outline Drawings 31
11. Marking Diagram 31
12. Ordering Information 31
13. Revision History 32

Figures

Figure 1. RRH46410 Gas Sensor 1
Figure 2. Block Diagram 4
Figure 3. Typical Application Circuit 4
Figure 4. Pin Assignments (Top View) 5
Figure 5. Typical RRH46410 Response to Levels of TVOC Described by UBA Using EPA Standard Mixture 11
Figure 6. Typical Graph of CO_2 Estimation in an Application 12
Figure 7. Scale of the Relative IAQ 12
Figure 8. Comparison of IAQ and Relative IAQ 13
Figure 9. IAQ Accuracy and Consistency 14
Figure 10. Concentration Dependent Accuracy for eCO_2 [] 14
Figure 11. TVOC Measurement According to Typical PBAQ Standards using RRH46410 15
Figure 12. RRH46410 Typical Response Time and Signal Stability for TVOC Exposure 16
Figure 13. Humidity Influence at Three Different TVOC Concentrations 17
Figure 14. I^2C Command Transmission Protocol 18
Figure 15. Bus Timing 19
Figure 16. UART Transmission Data Packet 20
Figure 17. Typical Solder Profile 30

Tables

Table 1. Part Numbers 4
Table 2. Gas Sensor Module Specifications during Operation 9
Table 3. Sample Rates, Warm-Up Samples, and Time for RRH46410 Operation Modes 10
Table 4. Level of Indoor Air Quality Based on TVOC Levels Described by UBA 11
Table 5. Typical RRH46410 Sensor Module Performances 13
Table 6. Typical Sensor Requirement to Meet a PBAQ Standard 14
Table 7. Bus Timing Characteristics [1] 19
Table 8. UART Data Frame Setting 20
Table 9. Error and Status Bit Definitions 22
Table 10. Request and Response Action Overview 22
Table 11. Measurement Results Encoding 25
Table 12. Debug Data Encoding 27
Table 13. Data Flash Bit Definitions 29
Table 14. Final Test Parameters 31

Downloaded from Arrow.com.

1. Overview

1.1 Block Diagram

The RRH46410 combines Renesas' ZMOD4410 MEMS sensing element and sensor signal conditioning IC (SSC) with an integrated Renesas RL78 microcontroller for easy customer integration.

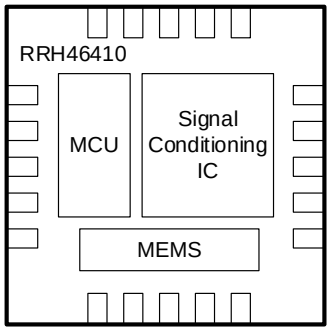

Figure 2. Block Diagram

1.2 Typical Application

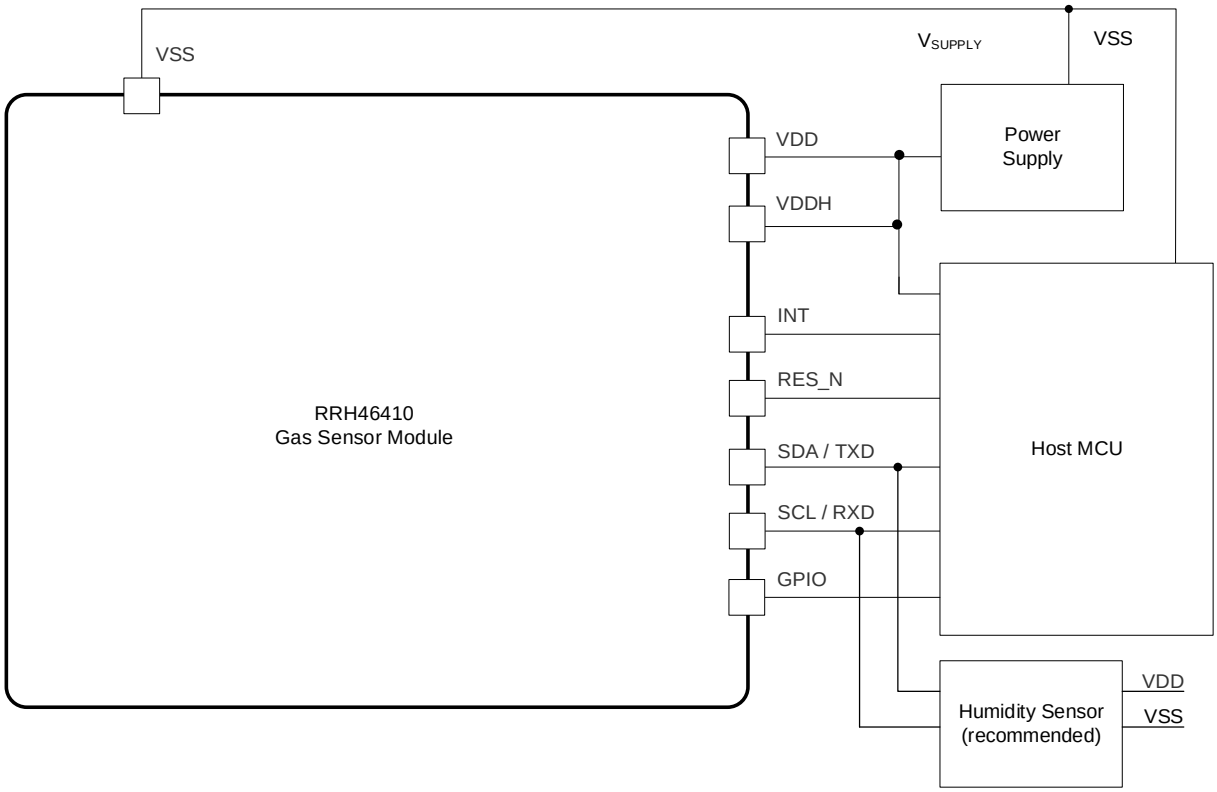

Figure 3. Typical Application Circuit

1.3 Product Family Overview

Table 1. Part Numbers

Part Number	Application	Key Components
RRH46410	Air Quality (VOC)	MCU, Si MHP, ASIC, MOx, FR4 substrate, metal lid, waterproof membrane, die attach epoxy

Downloaded from Arrow.com.

2. Pin Information

2.1 Pin Assignments

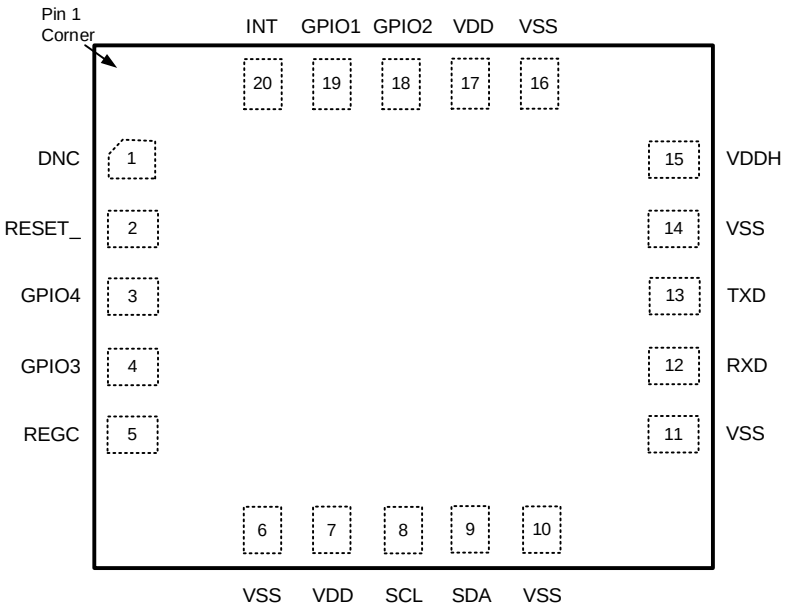

Figure 4. Pin Assignments (Top View)

2.2 Pin Descriptions

Pin Number	Pin Name	Description
1	DNC	Do not connect
2	RESET_	External reset. Active low.
3	GPIO4	General purpose I/O. Set to always input. ▪ Do not leave floating. ▪ Does not have internal pull-ups.
4	GPIO3	General purpose I/O. Set to always input. ▪ Do not leave floating. ▪ Does not have internal pull-ups.
5	REGC	Regulator capacitance. Connect the REGC pin to VSS pin via a capacitor (0.47µF to 1µF).
6	VSS	Ground reference for the RRH46410.
7	VDD	Voltage supply for the RRH46410.
8	SCL	Serial clock for the I^2C interface.
9	SDA	Serial data for the I^2C interface.
10	VSS	Ground reference for the RRH46410.
11	VSS	Ground reference for the RRH46410.
12	RXD	RXD of UART interface.
13	TXD	TXD of UART interface.

Downloaded from Arrow.com.

Pin Number	Pin Name	Description
14	VSS	Ground reference for the RRH46410.
15	VDDH	Voltage supply for the integrated heater in the RRH46410.
16	VSS	Ground reference for the RRH46410.
17	VDD	Voltage supply for the RRH46410.
18	GPIO2	General purpose I/O. This can be an input or output. ▪ Do not leave floating. ▪ Does not have internal pull-ups.
19	GPIO1	General purpose I/O. This can be an input or output. ▪ Do not leave floating. ▪ Does not have internal pull-ups.
20	INT	Interrupt. Push-pull output. High when data available and low when data read out.

Downloaded from Arrow.com.

3. Specifications

3.1 Absolute Maximum Ratings

Caution: Do not operate at or near the maximum ratings listed for extended periods of time. Exposure to such conditions can adversely impact product reliability and result in failures not covered by warranty.

Parameter	Minimum	Maximum	Unit
Supply Voltage (VDD)	-0.4	3.63	V
Voltage on I/O Pins	-0.3	VDD + 0.3	V
Voltage on Heater (VDDH)	-0.4	3.63	V
Maximum Difference in Voltage between VDD and VDDH Pins	-	0.4	V
Maximum Current on any I/O Pin (Latch-Up Immunity)	-40	40	mA
Storage Temperature	-45	125	°C
Electrostatic Discharge Tolerance – Human Body Model (HBM)	-	2000	V
Electrostatic Discharge Tolerance – Charged Device Model (CDM)	-	750	V
REGC Pin Input Voltage [1]	0.3	2.8 and VDD + 0.3	V

1. Connect the REGC pin to VSS via a capacitor (0.47µF to 1µF). This value regulates the absolute maximum rating of the REGC pin. Do not use this pin with voltage applied to it.

3.2 Electrical Specifications

The following values are valid at operating conditions unless noted otherwise.

Parameter	Symbol	Conditions	Minimum	Typical	Maximum	Unit
Supply Voltage Range	V_{DD}		1.8	-	3.6	V
Power Consumption	P_{AVG}	IAQ 2nd Gen operation V_{DD} = 1.8V	-	6.02	-	mW
		ULP operation V_{DD} = 1.8V	-	0.23	-	mW
		PBAQ operation V_{DD} = 1.8V	-	1.02	-	mW
Peak Supply Current, including Heater Current. For all operation modes including ULP.	I_{PEAK}	V_{DD} = 1.8V	-	18.7	-	mA
		V_{DD} = 3.3V		23.6	-	mA
Average Supply Current	I_{AVG}	IAQ 2nd Gen operation V_{DD} = 1.8V	-	3.3	-	mA
		IAQ 2nd Gen operation V_{DD} = 3.3V	-	2.4	-	mA
Average Supply Current	I_{AVG}	ULP operation V_{DD} = 1.8V	-	125	-	µA
		ULP operation V_{DD} = 3.3V		168		µA

Downloaded from Arrow.com.

Parameter	Symbol	Conditions	Minimum	Typical	Maximum	Unit
Average Supply Current	I_{AVG}	PBAQ operation V_{DD} = 1.8V	-	569	-	µA
		PBAQ operation V_{DD} = 3.3V		448		µA
Idle Current	I_{IDLE}	V_{DD} = 1.8V, between measurement cycles	-	12.1	-	µA
		V_{DD} = 3.3V, between measurement cycles	-	22.7	-	µA
Sleep Current	I_{SLEEP}	V_{DD} = 1.8V, SUSPEND mode	-	0.7	-	µA
		V_{DD} = 3.3V, SUSPEND mode	-	4.1	-	µA
Input High Level Voltage	V_{IH}	RXD, TXD, GPIO3, GPIO4 pins	0.8 × V_{DD}		-	V
		SDA, SCL, INT, GPIO1, GPIO2 pins	0.7 × V_{DD}		-	V
Input Low Level Voltage	V_{IL}	RXD, TXD, GPIO3, GPIO4 pins	-		0.2 × V_{DD}	V
		SDA, SCL, INT, GPIO1, GPIO2 pins	-		0.3× V_{DD}	V
Output High Level Voltage	V_{OH}	2.4V ≤ V_{DD} ≤ 3.6V, I_{OH} = -1.5mA	V_{DD} - 0.5		-	V
Output Low Level Voltage	V_{OL}	2.7V ≤ V_{DD} ≤ 3.6V, I_{OL} = 1.5mA	-		0.4	V
t_{RET_FTP}	Data Retention	85°C junction temperature	10	-	-	Years
Blocking Capacitor for Power Supply		Ceramic type; recommended to be placed close to gas sensor module	200	-	-	nF
Default I^2C Communication Address		7-bit slave address	-	38_{HEX}	-	-

Downloaded from Arrow.com.

4. Sensor Module Characteristics

4.1 Gas Sensor Module

The RRH46410 Gas Sensor Module is designed to detect typical TVOC contaminations based on studies and international standards for indoor air quality. In parallel to TVOC detection, it also responds very well, but not selectively, to Hydrogen (H_2) in the full parts-per-million range. Characteristic module parameters are shown in Table 2. The response time for a gas stimulation is always within a few seconds, depending on the specific gas molecule and its concentration. An active or direct airflow onto the sensor module is not necessary because diffusion of ambient gas does not limit the sensor module's response time.

Important: The RRH46410 also can detect safety-relevant gases for indoor air, such as carbon monoxide (CO); however, the sensor module is not designed to detect these interferants reliably and therefore it is not approved for use in any safety-critical or life-protecting applications. It must not be used in such applications, and Renesas disclaims all liability for any such use.

Table 2. Gas Sensor Module Specifications during Operation

Symbol	Parameter	Conditions	Minimum	Typical	Maximum	Unit
-	TVOC specified Measurement Range for PBAQ	Ethanol in air	1	-	2000	µg/m³
-	IAQ and TVOC specified Measurement Range to meet UBA [2]	Ethanol in air	160	-	10000	ppb [1]
RH_{AMB}	Humidity Range for Sensor Module Operation	All operations except PBAQ operation, Non-condensing	0	-	90	% RH
		Specification to meet PBAQ, Non-condensing	-	50	-	% RH
T_{AMB_O}	Temperature Range for Sensor Module Operation	Qualified maximum temperature range without hardware damage	-40	-	+85	°C
T_{AMB_A}	Temperature Range for Algorithm Operations	All operation modes except PBAQ, Non-condensing	-40	-	+65	°C
		Specification according to PBAQ, Non-condensing	-	21	-	°C
T-80	Sensor Module Response Time [3]	Samples needed to change to 80% of end value	-	15	-	Samples

1. The abbreviation ppb stands for "parts per billion." Conversion from ppb to mg/m³ for most common TVOC is by the factor of 0.002 (for example, 1000ppb equals to approximately 2mg/m³)
2. Source: Umweltbundesamt, Beurteilung von Innenraumluftkontaminationen mittels Referenz- und Richtwerten, (Bundesgesundheitsblatt – Gesundheitsforschung – Gesundheitsschutz, 2007).
3. Response times depend on TVOC gas and concentration.

Downloaded from Arrow.com.

5. Gas Sensor Module Operation Modes and Characteristics

The sensor module architecture leverages different “Methods of Operation” (Operation Modes), which use time, temperature, and signatures from gases that enable unique signals from a highly trained machine learning system and makes use of embedded artificial intelligence (AI) technology. This section discusses the different operation modes of the RRH46410.

Family of operation modes:

- **IAQ 2nd Gen**: IAQ, Relative IAQ, TVOC, eCO_2 (recommended for new designs)
- Ultra-Low Power (**ULP**): IAQ, Relative IAQ, TVOC, eCO_2
- Public Building Air Quality (**PBAQ**) – TVOC measurement to meet Public Building Air Quality (PBAQ) standards

Note: Only one operation mode should run continuously on one physical device. Switching of modes should not be done during device operation.

Table 3 provides an overview of recommended RRH46410 operation modes including their sample rate and the warm-up (stabilization) samples after each power on. The warm-up times are fixed, and algorithm results should be considered only after the warm-up.

Table 3. Sample Rates, Warm-Up Samples, and Time for RRH46410 Operation Modes

Operation Mode	Sample Rate [Seconds]	Warm-Up Samples Upon Start	Warm-Up Time [Minutes]
IAQ 2nd Gen	3	100	5
ULP	90	10	15
PBAQ [1]	5	60	5

1. Output values are fixed during warm-up.

In addition, details for sensitivity, reliability, sample rates, and sensor module influences are explained in detail in the following sections. All graphs and information show the typical responses that are to be expected from the sensor module upon exposure to a variety of test conditions. Additional technical information on sensitivity, selectivity, and stability for all operation modes is available in Renesas’ *ZMOD4410 Application Note – TVOC Sensing* for its MOx sensing element. For more information, including application notes, firmware example (C code drivers with API), white papers, blog, and manuals, see the RRH46410 product page.

5.1 IAQ 2nd Generation (Absolute and Relative Measurement)

These operation modes are used for absolute measurements of indoor air quality (IAQ) according to UBA with eCO_2. Also, relative index algorithms which allow the RRH46410 to learn its environment. The relative IAQ module will only respond to changes in the ambient conditions by detecting changes in the relative ambient TVOC concentration.

The following sections provide information on TVOC gases, concentrations, and thresholds given by the German Federal Environmental Agency (UBA)1 and the US Environmental Protection Agency (EPA). These standards provide reliable information on indoor air quality and recommendations for air improvements if necessary. Furthermore, the CO_2 estimation and the non-standardized relative IAQ output is described.

5.1.1. Air Quality – IAQ Levels According to UBA

The algorithm provided by Renesas for the on-board microprocessor uses the resistance output from signal conditioning IC to determine the level of TVOC gasses present. The algorithm features an automated baseline

1 Umweltbundesamt, *Beurteilung von Innenraumluftkontaminationen mittels Referenz- und Richtwerten*, (Bundesgesundheitsblatt - Gesundheitsforschung - Gesundheitsschutz, 2007).

Downloaded from Arrow.com.

correction function, ensuring that the module can learn from its environment and distinguish elevated levels of TVOC under all conditions. The proprietary metal oxide (MOx) used in the sensor module allows it to respond effectively to changing TVOC levels during long-term operation.

Renesas has adopted the definition of TVOCs and their impact on user health and comfort proposed by the UBA (see Table 4). The RRH46410 can detect the presence of elevated TVOC levels as described in the UBA study.[1]

There are many sources of poor indoor air quality that can elevate TVOC levels in the typical home or office environments, and the types of TVOC that may be present can vary widely. Additional information on this topic is available in Renesas' *Overview of TVOC and Indoor Air Quality – White Paper*.

The RRH46410 can respond reliably to all types of organic compounds that are typically found in indoor environments. To assess the response of the gas sensor module to the levels described in the UBA study, the module has been tested using several TO-15/17 multi-component TVOC standards defined by the EPA. The RRH46410 response to the EPA standard with the TVOC levels from UBA is shown in Figure 5. A third-party report and certification from an independent research lab are available on the Renesas website that confirms the good conformity for IAQ measurements with respect to the UBA study and EPA standard. This report contains testing for ZMOD4410 part with the same sensing element and sensor signal conditioner.

Table 4. Level of Indoor Air Quality Based on TVOC Levels Described by UBA

Renesas IAQ Rating	Reference Level [1]	Air Information	TVOC (mg/m³) [1]	Air Quality
≤ 1.9	Level 1	Clean Hygienic Air (target value)	< 0.3	Very Good
2.0 to 2.9	Level 2	Good Air Quality (if no threshold value is exceeded)	0.3 to 1.0	Good
3.0 to 3.9	Level 3	Noticeable Comfort Concerns (not recommended for exposure > 12 months)	1.0 to 3.0	Medium
4.0 to 4.9	Level 4	Significant Comfort Issues (not recommended for exposure > 1 month)	3.0 to 10.0	Poor
≥ 5.0	Level 5	Unacceptable Conditions (not recommended)	> 10.0	Bad

1. Conversion from mg/m³ to ppm for many common TVOC is by the factor approximately 0.5 (for example, 10mg/m³ equals approximately 5ppm). Conversion from ppm to ppb is by the factor 1000 (for example, 0.1ppm equals 100ppb).

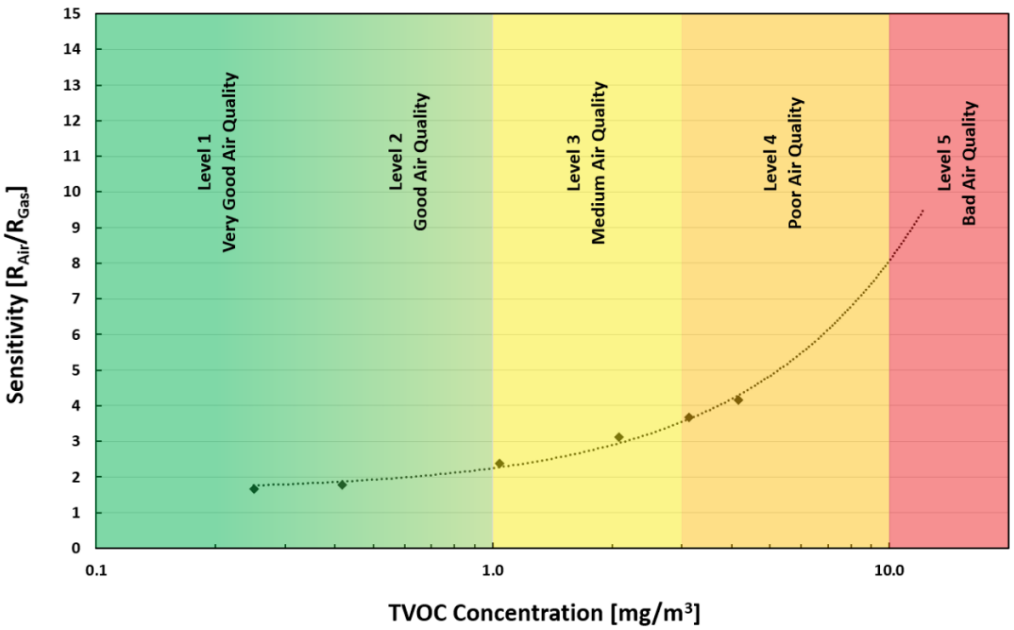

Figure 5. Typical RRH46410 Response to Levels of TVOC Described by UBA Using EPA Standard Mixture

Note: TVOC is a subset comprising 25 of the EPA's TO-15/17 certified mixtures.

Downloaded from Arrow.com.

5.1.2. Air Quality – Estimated Carbon Dioxide Correlation (eCO_2)

A reliable correlation can be made based on TVOC levels for situations where an elevated carbon dioxide (CO_2) concentration is caused by human occupancy, although the sensor module is not directly responsive to CO_2. Renesas has developed a robust, patent pending, correlation algorithm between elevated TVOCs and CO_2 attributable to human occupancy in a wide variety of living spaces, including homes and offices. The measurement range for the eCO_2 has its minimum at the atmospheric background level at 400ppm and ranges up to 5000ppm. The algorithm can predict the CO_2 level as shown in Figure 6. Additional information about the Renesas' CO_2 correlation algorithm are available in the *Application Note – Estimating Carbon Dioxide*.

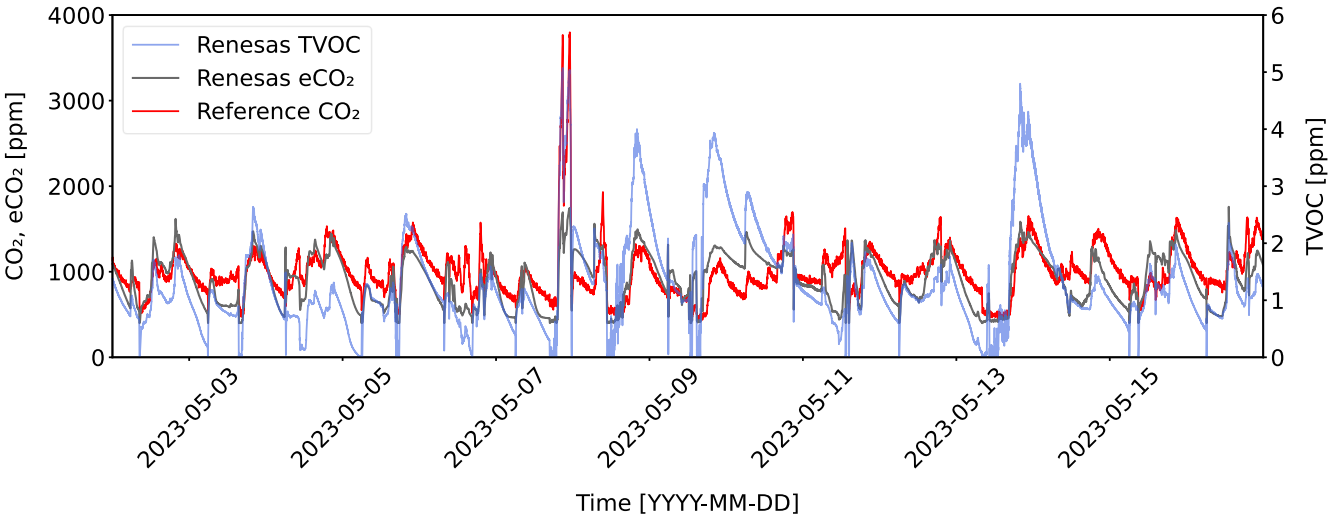

Figure 6. Typical Graph of CO_2 Estimation in an Application

5.1.3. Relative IAQ

Advantages of this output is an easy establishment of threshold limits to trigger actions (for example, turn on a fan for ventilation) in which case no absolute TVOC concentration readings are needed. Also, this algorithm behaves similar to the human nose, in which small concentration changes are rapidly detected with high sensitivity while slow changes are suppressed. The sensor will react immediately to all TVOC, but the algorithm uses a time constant of 24 hours for a full decay. In the case where no change in air quality takes place within this time, the algorithm will converge to an index of 100. This scale index is defined in the style of the EPA scale for Outdoor Air Quality[2] as indicated in the following figure.

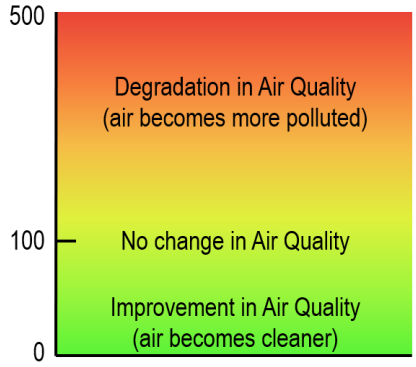

Figure 7. Scale of the Relative IAQ

2 For more information on Outdoor Air Quality and how to detect it, see the ZMOD4510 product page.

Downloaded from Arrow.com.

Figure 8 provides a comparison of the IAQ output (see section 5.1) and the Relative IAQ output for a week of data collection in an indoor environment. Events such as opening a window during the day and night and trends in TVOC are clearly visible on both outputs. While the Relative IAQ appears smoother, it is more sensitive to changes in TVOC and begins to adapt (decrease) at high TVOC exposures over time.

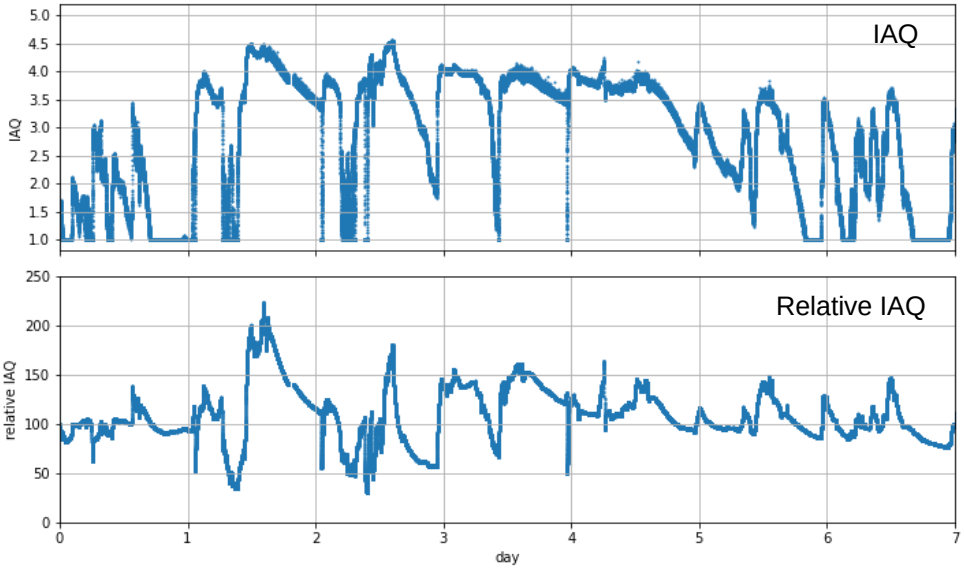

Figure 8. Comparison of IAQ and Relative IAQ

5.1.4. Accuracy and Consistency

All Renesas gas sensor modules come with electrical and chemical factory calibration with data stored in the module's non-volatile memory (NVM). The RRH46410 uses the calibration coefficients in the NVM to produce stable measurements of the IAQ levels according to UBA discussed in section 5.1.1 with a maximum deviation of ±1 category over the module's lifetime. Typical IAQ accuracy and consistency in an appropriate system implementation are displayed in Table 5 and in Figure 9. The accuracy for Renesas eCO_2 algorithm was proved on more than 20000 measurements and is shown in Figure 10.

Table 5. Typical RRH46410 Sensor Module Performances

Parameter	Conditions	Minimum	Typical	Maximum	Unit
Accuracy for IAQ	IAQ 2nd Gen, Full UBA range [1]	-	± 1	-	IAQ
Accuracy for IAQ	ULP, Full UBA range [2]	-	± 1	-	IAQ
Consistency for IAQ	Part-to-Part Variation [3]	-	± 10	-	%

1. With a 95% confidence based on more than 26500 measurements with 280 sensor modules.
2. With 82% confidence based on more than 3500 measurements with 104 sensor modules.
3. Based on more than 30000 measurements with 380 sensor modules.

Downloaded from Arrow.com.

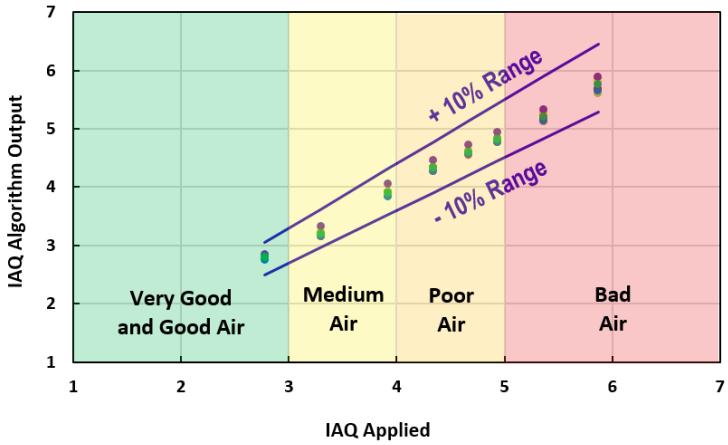

Figure 9. IAQ Accuracy and Consistency

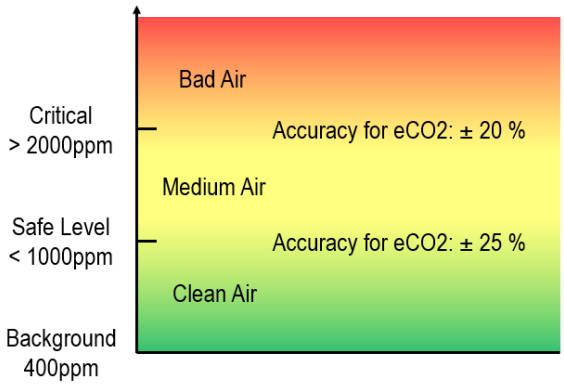

Figure 10. Concentration Dependent Accuracy for eCO_2 [3]

5.2 Public Building Air Quality Standards (Absolute Measurement)

This operation mode is used for absolute measurements of TVOC to meet Public Building Air Quality (PBAQ) standards released globally [4][5]. PBAQ standards promote health, cognitive scores, and well-being in buildings. Several aspects of environmental parameters are evaluated, including TVOC. To meet a PBAQ standard a TVOC sensor must fulfill a specification as displayed in Table 6.

Table 6. Typical Sensor Requirement to Meet a PBAQ Standard

Parameter	Unit	Typical Range	Typical Accuracy	Resolution	Calibration Gas
TVOC	ppb or µg/m³	1 to 2000 µg/m³ [1]	(± 20 µg/m³ + 15%) at 1 to 1000 µg/m³	1 µg/m³	Ethanol

1. Maximum output for this algorithm capped at 6000µg/m³.

3. eCO2 accuracy can only be achieved if no artificial or non-human VOC sources are present.

4. IWBI, WELL Performance Verification Guidebook (International WELL Building Institute PBC), 2022.
For more information about the WELL standard, see WELL; for information about the WELL specification, see specification.

5. Regenerative Ecological, Social, and Economic Targets (RESET), Air Standards for Accredited Monitors v2.0, 2018.
For more information about the RESET standard, see RESET; for information about the RESET specification, see specification.

Downloaded from Arrow.com.

TVOC sensors must have high resolution in the low µg/m³ (ppb) concentration range, which is fulfilled using the RRH46410 gas sensor module with the PBAQ mode. A comparison with a reference is shown in Figure 11.

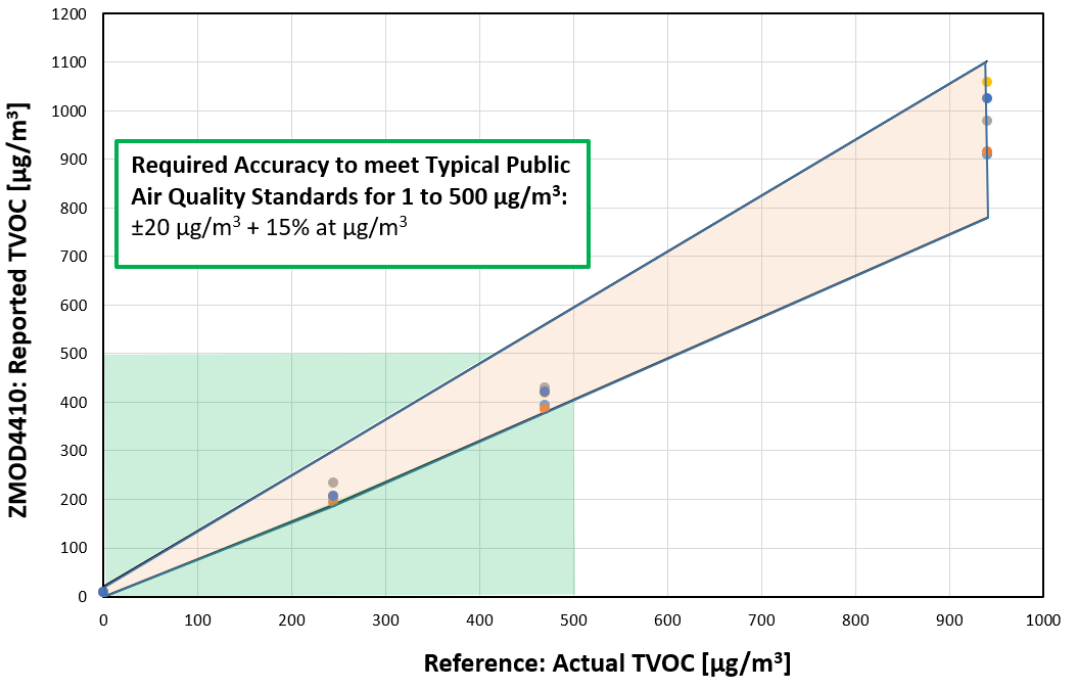

Figure 11. TVOC Measurement According to Typical PBAQ Standards using RRH46410

However, it should be highlighted that PBAQ standards usually require calibration of the final product itself. In addition, all sensors measuring air quality parameters must be recalibrated or replaced annually. To receive the *Renesas PBAQ Calibration Guidelines* with detailed information on the calibration procedure, contact Renesas Support.

5.3 Conditioning, Sensor Self-Check Status, and Stability

The cleaning conditions the sensor material and helps to remove contaminants (for example, solder flux and vapors). The cleaning process takes 1 minute. Cleaning can only be performed once during the lifetime of the sensor and is recommended after PCB assembly (for example, during final production test or at the end customer). The cleaning function automatically ensures that cleaning is performed only once. This is done by writing a control bit into the sensor module's NVM. It is important not to interrupt the cleaning process while it is running.

The RRH46410 will respond to TVOC immediately upon start-up; however, a conditioning period of at least 48 hours of continuous operation in an ambient environment is recommended to improve stability and obtain maximum performance.

The sensor module has a self-check for its general functionality. With every measurement the algorithm performs an internal check of resistances to identify potential damage and the RRH46410 measurement output contains a sensor self-check status with either valid or damage, see Error and Status Code for error codes. If a damage error lasts longer than 60 minutes then the following are possible reasons:

- Improper or open solder contacts
- High contamination on sensor material surface
- Broken MEMS membrane
- MOx material delamination
- Oxygen depletion on sensor surface
- Extremely high VOC stimulation

Downloaded from Arrow.com.

The following measures can solve this issue:

1. Check your production to ensure proper soldering. Use a proper soldering paste with correct temperature profile.
2. Find the source of sensor surface contamination during production (for example, solder vapors, cleaning chemicals) and try to avoid them. Make sure to have executed the cleaning procedure after the assembly (see “Set Operation Mode”).
3. Make sure the sensor module’s vent hole is not blocked because of protection paints or high dust/dirt accumulation.
4. Do not use or store the sensor in an atmosphere without oxygen (for example, pure nitrogen).

Figure 12 shows the RRH46410 sensor module’s raw data response to clean air with 30%RH and its response to 5ppm, 10ppm, and 20ppm ethanol mixed in clean air. The sensor module signal is a very stable, fast changing, and repeatable with a high sensitivity.

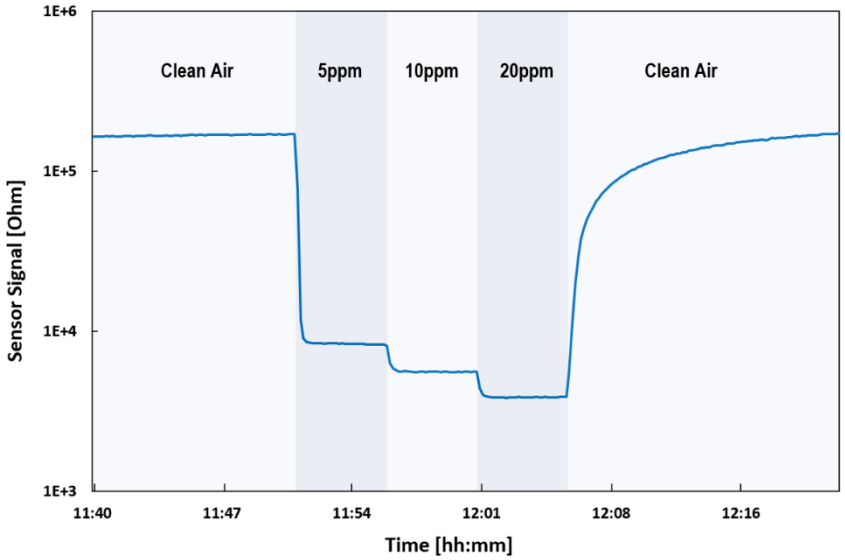

Figure 12. RRH46410 Typical Response Time and Signal Stability for TVOC Exposure

Downloaded from Arrow.com.

5.4 Environmental Influences

Although the RRH46410 sensor module is tested, qualified, and functional in the range of -40°C to +65°C, the best performance according to its calibration is achieved in the temperature range of 0°C to +40°C. Figure 13 shows the module's response to variations in the range from 15% to 65% relative humidity for ethanol concentrations mentioned in section 5.3.

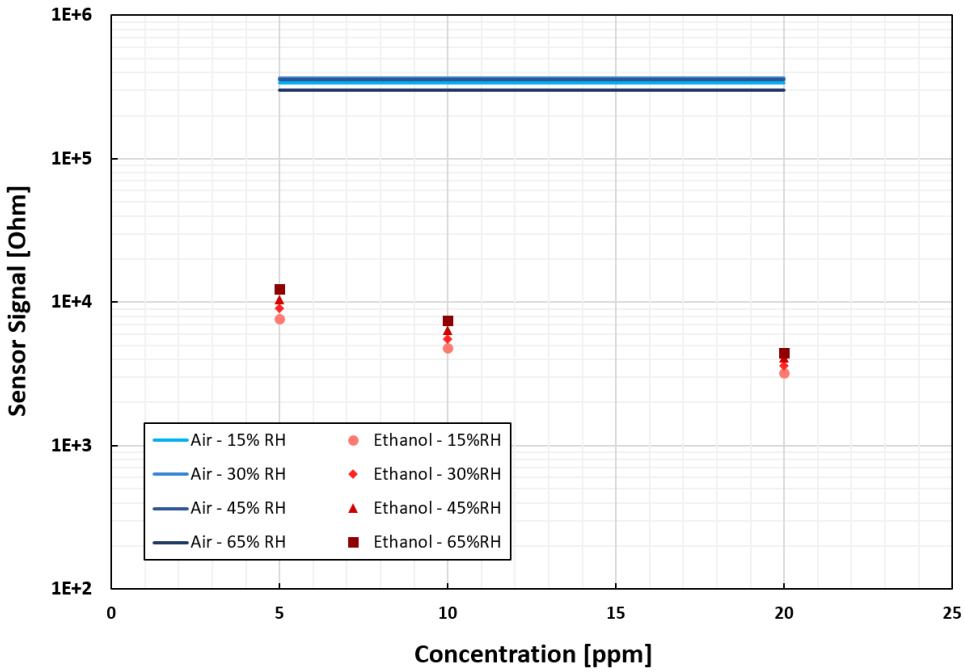

Figure 13. Humidity Influence at Three Different TVOC Concentrations

Relative humidity input is not required but is recommended for best performance. If relative humidity values are provided, the RRH46410 automatically uses these values for compensation. If no humidity data is provided, the initial default value for humidity is 50%. If no humidity sensor is available, this value should be changed according to the application once in the beginning. Any values provided before will be stored and used for next measurement if not updated in-between. Note that for the calculation of Relative IAQ no humidity data is needed.

Use the "Set Humidity" command through the I^2C or UART interface to provide humidity values to the algorithm.

For some environments, an interference response to siloxanes is of concern; however, the RRH46410 has proven to be resistant against siloxanes. A maximum potential lifetime exposure has been simulated in all RRH46410 operation modes by applying the chemicals D4 (octamethylcyclotetrasiloxane) and D5 (decamethylcyclopentasiloxane) in high concentration for several hundred hours. For more information on test conditions and results, see the *ZMOD4410 Application Note – TVOC Sensing* for its MOx sensing element.

Downloaded from Arrow.com.

6. Data Transmission Protocols

6.1 I²C Interface

The I²C slave device interface supports various bus speeds: Standard Mode (≤100kHz) and Fast Mode (≤400kHz). The I²C master must support clock stretching.

By default, the 7-bit slave address for the serial I²C data interface is set to 0x38. The implemented data transmission protocol is different to the one used for conventional EEPROM devices. The RRH46410 does not select registers to read/write directly. Instead, commands are issued by the master with an I²C write operation, where the follow-on bytes sent include the command code, any data parameters, and a checksum. The sequence may end with a STOP or have a REPEATED START to begin reading the response.

For the command response, the master issues an I²C read operation to receive an error and status byte, any data parameters, and a checksum. Finally, the master issues a NACK and a STOP.

For an example of the I²C data transmission protocol, see Figure 14. For information on I²C bus timing, see Figure 15. For I²C bus characteristics, see Table 7 which explains how to set up the interface.

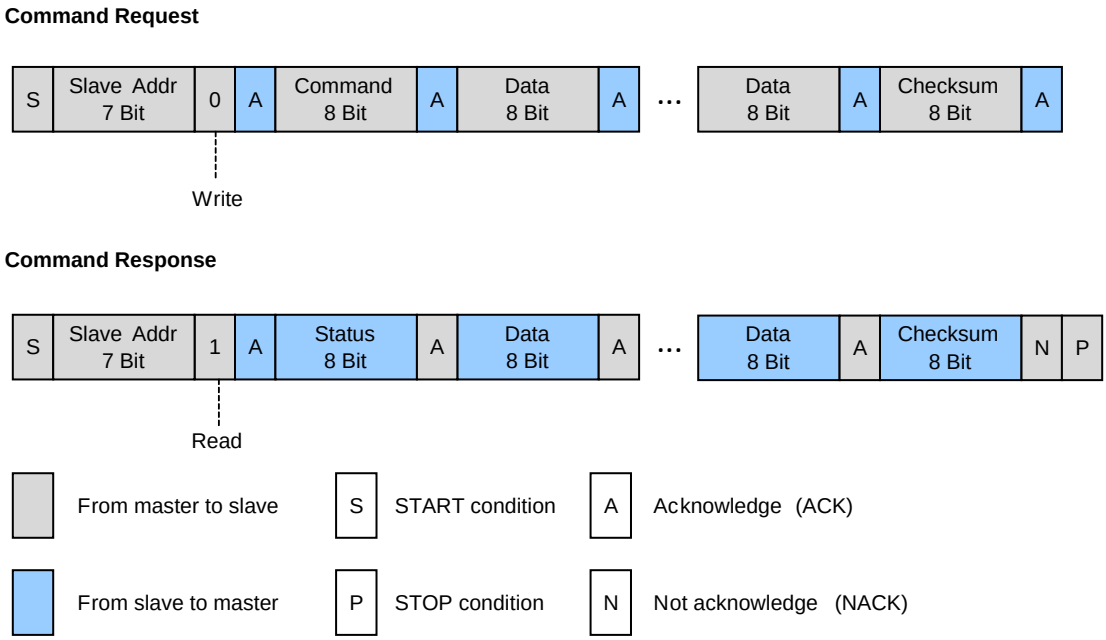

Figure 14. I²C Command Transmission Protocol

Downloaded from Arrow.com.

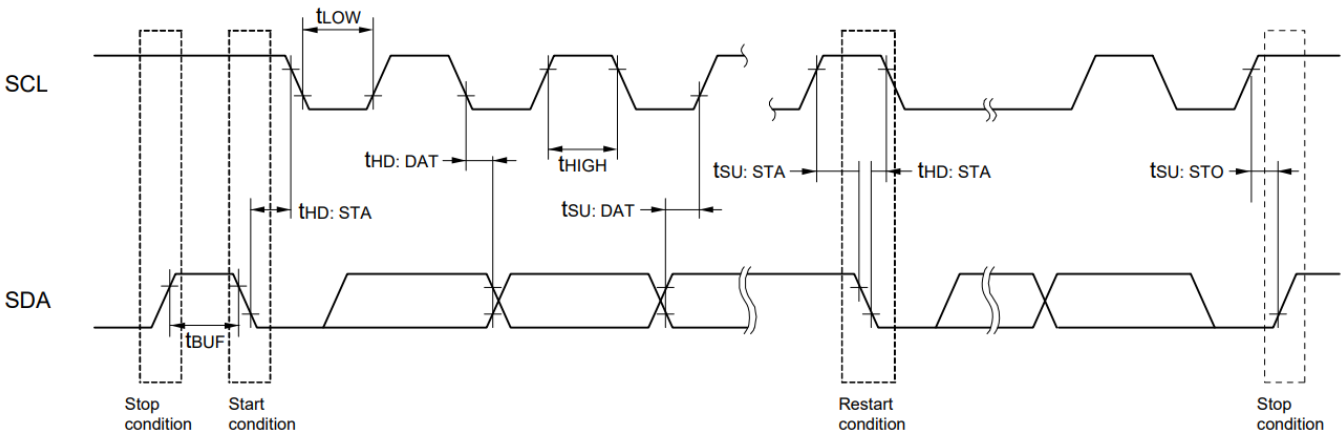

Figure 15. Bus Timing

Table 7. Bus Timing Characteristics [1]

Parameter	Symbol	Standard Mode		Fast Mode		Unit
		Minimum	Maximum	Minimum	Maximum	
Maximum SCL Clock Frequency	f_{SCL}	-	100	-	400	kHz
Setup Time of Restart Condition	$t_{SU: STA}$	4.7	-	0.6	-	µs
Hold Time [2]	$t_{HD: STA}$	4.0	-	0.6	-	µs
Hold Time when SCL = “L”	t_{LOW}	4.7	-	1.3	-	µs
Hold Time when SCL = “H”	T_{HIGH}	4.0	-	0.6	-	µs
Data Setup Time (reception)	$t_{SU: DAT}$	250	-	100	-	ns
Data Hold Time (transmission) [3]	$t_{HD: DAT}$	-	3.45	0	0.9	µs
Setup Time of Stop Condition	$t_{SU: STO}$	4.0	-	0.6	-	µs
Bus-Free Time	t_{BUF}	4.7	-	1.3	-	µs

1. The maximum value of C_b (communication line capacitance) and the value of R_b (communication line pull-up resistor) for each mode are as follows:
   Standard mode: C_b = 400pF, R_b = 2.7kΩ
   Fast mode: C_b = 320pF, R_b = 1.1kΩ
2. The first clock pulse is generated after this period when the start/restart condition is detected.
3. The maximum value (Max.) of tHD: DAT is during normal transfer and a clock stretch state is inserted in the ACK (acknowledge) timing.

Downloaded from Arrow.com.

6.2 UART Interface

The UART interface sends data frames that consist of a start bit, data, and stop bit. Data is sent asynchronously within each data frame.

Table 8. UART Data Frame Setting

Parameter	Value
Data Bit Size	8-bit
Parity	None
Flow Control	None
Stop Bit Size	1-bit
Baud Rate	9600bps

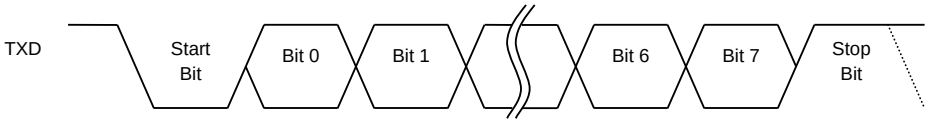

Figure 16. UART Transmission Data Packet

The UART is an asynchronous protocol without any hardware handshake. In the application it can happen that bytes get lost (for instance when the host controller starts a command frame while the RRH46410 is still in reset or initialization). The user is responsible to avoid such situations or must implement a process to resynchronize the command frames. One suggested synchronization procedure on the host side includes:

Run in loop:

1. Wait 20ms.
2. Flush receive buffer.
3. Send a request with “Get Product ID” command and checksum.
4. Wait with timeout (> 50ms) for 7 bytes response.
5. If timeout occurred or response checksum is invalid:
   a. Send byte 0xFF.
6. Else:
   a. Leave synchronization procedure.

The command interpreter in the RRH46410 can detect a wrong command frame by its checksum only. It has no method to resynchronize the command frames.

Downloaded from Arrow.com.

7. Commands

The RRH46410 receives commands on its I²C and UART interfaces, executes them, and answers with a response. Each command consists of:

- A request coming from host MCU
- A response coming from RRH46410

The only exception is the Reset command which has no response. Request and response parameters can contain 0 or multiple bytes. For the exact number of bytes for each request and response parameter, see Table 10.

As displayed in Figure 14, each request or respond consists of:

- 1 byte command code or 1 byte error and status code
- 0 or more bytes of parameter
- 1 byte checksum

The checksum of the requests must be calculated by summing command (or error and status code) and parameter bytes. The inverted value of the least significant byte (LSB) of this sum results in the checksum value. The sum of LSB(command + parameter) and checksum bytes must be 0xFF.

Checksum calculation example:

```
Command byte   = 0x3A
Parameter byte = 0x56
Checksum byte  = ~LSB(Command + Parameter)
               = ~LSB(0x3A + 0x56) = ~(0x90)
               = 0x6F
Sum            = LSB(Command byte + Parameter byte) + Checksum
               = LSB(0x3A + 0x56) + 0x6F
               = 0xFF

(~ Bitwise inversion, LSB: least significant byte)
```

The host MCU may make requests without reading the response or read the response incompletely. If the RRH46410 I²C receives a START or REPEATED_START condition followed by a write, the command interpreter readies to receive a new request.

If a request was received through I²C, any additional bytes received during I²C write access will be ignored. If less than the expected number of bytes are received during I²C write access, an error code will be in the response.

If an I²C read is done without a preceding write access, the response will be 0xFF for bytes read.

Downloaded from Arrow.com.

7.1 Error and Status Code

The value of the Error and Status code is sent as the first byte of every command response except for Reset.

Table 9. Error and Status Bit Definitions

Bit	Set Condition(s)
7	Set when an invalid command is detected. Set when I^2C reads data without a preceding write access. Set when I^2C received an error (for example, unexpected NACK) or when UART received an unexpected bit (for example, frame errors like wrong stop bit)
6	Set when the checksum of the request is wrong.
5	Set when gas sensor I^2C (internal) received an unexpected NACK.
4	Set when the execution of an asynchronous command (internal) has not been completed by the time the retrieval command requests the resulting data.
3:0	Set with the lower bits of the operation mode error code if an error occurred: 0x0 = OK, 0xA = damage

7.2 Requests and Responses

The following table lists the RRH46410's available commands, along with their request and response formats.

Table 10. Request and Response Action Overview

Code	Action	Request Parameter Bytes	Response Parameter Bytes
0x00	Get Product ID	0	5
0x01	Get Tracking Number	0	6
0x10	Get Operation Mode	0	1
0x11	Set Operation Mode	1	0
0x12	Set Humidity	1	0
0x18	Get Measurement Results	0	N
0x20	Config GPIO	1	0
0x21	Get GPIO	0	1
0x22	Set GPIO	1	0
0x23	Clear GPIO	1	0
0x31	Read Debug Data	0	N
0x40	Read Flash Shadow	1	1
0x41	Write Flash Shadow	2	0
0x42	Write Flash	0	1
0x8F	Reset	0	No response.

Downloaded from Arrow.com.

7.2.1. Get Product ID

Returns product ID and firmware version of the RRH46410.

	Value	Description
Command	0x00	-
Request bytes	0	-
Response bytes	5	2 bytes product ID 3 bytes firmware version

7.2.2. Get Tracking Number

Returns tracking number of ASIC.

	Value	Description
Command	0x01	-
Request bytes	0	-
Response bytes	6	ASIC tracking number

7.2.3. Get Operation Mode

Return the currently used operation mode. For more information about operation modes, see section 7.2.6.

	Value	Description
Command	0x10	-
Request bytes	0	-
Response bytes	1	Currently used operation mode: 0x00 = SUSPEND 0x01 = IAQ 2nd Gen 0x02 = ULP 0x03 = SUSPEND 0x04 = Do not use 0x05 = PBAQ 0x80 = Sensor cleaning Others = SUSPEND

Downloaded from Arrow.com.

7.2.4. Set Operation Mode

This command stops a running measurement and changes the operation mode; however, not the startup operation mode. INT pin is set to low.

Three operation modes are available for measurements: IAQ 2nd Gen, ULP, and PBAQ. The operation mode "Sensor cleaning" should be used one time during a sensor's lifetime after production (best at the end-customer). The cleaning operation takes 1 minute, and cannot be executed again after it finishes. This cleaning should not be interrupted (e.g., by power disruption). If there is a chance that an interruption may occur, make sure that cleaning cannot be started more than three times. Using cleaning too often without finishing can destroy the sensor material. To detect if a cleaning was already performed, it is possible to start the cleaning operation mode and afterwards read out the operation mode. If the cleaning was already performed it will stay in SUSPEND operation mode. To detect the end of the cleaning, the transition of the operation modes Cleaning and SUSPEND can be used with the command Get Operation Mode.

Default mode is 0x00. For more information on the result output of the other operation modes, see section 7.2.6.

	Value	Description
Command	0x11	-
Request bytes	1	Code for new operation mode: 0x00 = SUSPEND 0x01 = IAQ 2nd Gen 0x02 = ULP 0x03 = SUSPEND 0x04 = Do not use 0x05 = PBAQ 0x80 = Sensor cleaning Others = SUSPEND
Response bytes	0	-

7.2.5. Set Humidity

It is possible to use Humidity for ambient compensation. Humidity is initialized to 50.0. The humidity values need to be encoded with following formular:

$$Code = \left[\frac{Humidity\ (\%RH)}{100}\right] * 255$$

	Value	Description
Command	0x12	-
Request bytes	1	Code (uint8_t) for ambient humidity
Response bytes	0	-

Downloaded from Arrow.com.

7.2.6. Get Measurement Results

This command always sets the INT pin to Low.

The first byte of the results contains the sample counter. The sample counter gets initialized with 0x00 when starting a new measurement and incremented with each sample. The host can use the change of the sample counter to detect a new sample.

For encoding of measurement results, see Table 11.

	Value	Description
Command	0x18	-
Request bytes	0	-
Response bytes	N	Coded measurement results

The measurement results response depends on the RRH46410 current operation mode, and outputs data as encoding in Table 11. Values cannot overflow and are capped at 0xFF (1 byte) or 0xFFFF (2 bytes). All values are unsigned integers.

Table 11. Measurement Results Encoding

Operation Mode	Bytes	Parameter	Bit Encoding	Unit
IAQ 2nd Gen	1	Indoor Air Quality	IAQ / 10	UBA levels
	2	Total Volatile Organic Compounds	TVOC / 100	mg/m3
	2	Ethanol Equivalent	ETOH / 100	ppm
	2	Estimated CO_2	ECO2	ppm
	1	Relative IAQ	RELIAQ * 10	-
ULP	1	Indoor Air Quality	IAQ / 10	UBA levels
	2	Total Volatile Organic Compounds	TVOC / 100	mg/m3
	2	Ethanol Equivalent	ETOH / 100	ppm
	2	Estimated CO_2	ECO2	ppm
	1	Relative IAQ	RELIAQ * 10	-
PBAQ	2	Total Volatile Organic Compounds	TVOC / 1000	mg/m3
	2	Ethanol Equivalent	ETOH / 1000	ppm

Downloaded from Arrow.com.

7.2.7. Config GPIO

Configures the direction of the GPIO1 and GPIO2 pins. GPIO3 and GPIO4 are always inputs. MCU does not have pull-up/down resistors on these pins.

	Value	Description
Command	0x20	-
Request bytes	1	GPIO directions: Bit 0: GPIO1 input (0) or output (1) Bit 1: GPIO2 input (0) or output (1) Bit 2-7: Ignored
Response bytes	0	-

7.2.8. Get GPIO

Read logic values on GPIO pins. MCU does not have pull-up/down resistors on these pins.

	Value	Description
Command	0x21	-
Request bytes	0	-
Response bytes	1	GPIO pin values: Bit 0: GPIO1 Bit 1: GPIO2 Bit 2: GPIO3 Bit 3: GPIO4 Bit 4-7: Always 0

7.2.9. Set GPIO

Set the selected GPIO pins to 1. Unselected pins are not changed. MCU does not have pull-up/down resistors on these pins.

	Value	Description
Command	0x22	-
Request bytes	1	Set selected GPIO pins to 1: Bit 0: Select GPIO1 Bit 1: Select GPIO2 Bit 2-7: Ignored
Response bytes	0	-

Downloaded from Arrow.com.

7.2.10. Clear GPIO

Clear the selected GPIO pins to 0. Unselected pins are not changed.

	Value	Description
Command	0x23	-
Request bytes	1	Clear selected GPIO pins to 0: Bit 0: Select GPIO1 Bit 1: Select GPIO2 Bit 2-7: Ignored
Response bytes	0	-

7.2.11. Read Debug Data

The RRH46410 supports the read-out of debug data. This can be used for several purposes (e.g., production testing or analyzing unexpected result output). The first byte of the debug data contains the sample counter. The sample counter is initialized with 0x00 when starting a new measurement, and is incremented with each sample. The host can detect a new sample by monitoring the change in the sample counter.

The following parameters use 4 bytes (1 DWORD). The DWORD values are encoded as Floating-Point Numbers and in little-endian byte order. For encoding of debug data, see Table 12.

	Value	Description
Command	0x31	-
Request bytes	0	-
Response bytes	N	Coded debug data

Table 12. Debug Data Encoding

Mode	Response bytes N	DWORD position									
		[0…12]	13	14	15	16	17	18	19	20	21
IAQ 2nd Gen	81	rmox[0]…rmox[12]	log_rcda	Rhtr	T	IAQ	TVOC [mg/m³]	EtOH [ppm]	eCO2 [ppm]	-	-
ULP	89		rcda[0]	rcda[1]	rcda[2]	Rhtr	T	IAQ	TVOC [mg/m³]	EtOH [ppm]	eCO2 [ppm]
PBAQ	73		log_rcda	Rhtr	T	TVOC [mg/m³]	EtOH [ppm]	-	-	-	-

The following parameters can be of relevance for further analysis:

- rmox[0]…rmox[12]: 13 raw resistance values give information about the state and history of the sensor material.
- log_rcda, rcda[0]… rcda[2]: several algorithmic derived baselines.
- Rhtr: MEMS heater resistance.
- T: internal temperature measurement.
- IAQ, TVOC, EtOH, eCO2 are the algorithm output calculations.

Downloaded from Arrow.com.

7.2.12. Read Flash Shadow

For more information, see section 7.3.

	Value	Description
Command	0x40	-
Request bytes	1	Address in flash shadow RAM
Response bytes	1	Value

7.2.13. Write Flash Shadow

Save value in data flash shadow RAM. For more information, see section 7.3.

	Value	Description
Command	0x41	-
Request bytes	2	1-byte address in flash shadow RAM 1-byte value to write
Response bytes	0	-

7.2.14. Write Flash

Erase data flash and write data flash shadow RAM in data flash. For more information, see section 7.3.

After command, must wait until the flash write is finished before sending a new command or power-off the device.

	Value	Description
Command	0x42	-
Request bytes	0	-
Response bytes	1	PFDL error code: 0x30 = Idle (ready to receive request) 0x00 = OK (command finished without problems) 0xFF = Busy (command is being processed) 0x10 = Protection error (access right conflict) 0x1A = Erase error 0x1B = Blank check or verify margin violated 0x1C = Write error 0x05 = Parameter error

Downloaded from Arrow.com.

7.2.15. Reset

Reset the MCU. It may take up to 500ms until all RRH46410 functions are available again.

	Value	Description
Command	0x8F	-
Request bytes	0	-
Response bytes	-	No response.

7.3 Data Flash

The data flash is a 256-byte flash that contains firmware parameters that can be changed. This data flash is completely read during firmware initialization and held in RAM.

To change the data flash contents, first change the RAM contents using the Write Flash Shadow command. After doing all modifications, use the Write Flash command to erase the data flash and copy the RAM contents to the data flash.

Note: The user must take care that no reset occurs during the writing of the data flash.

Changing the slave address of the I^2C interface requires the command Write Flash Shadow to modify the slave address in RAM, command Write Flash to make it persistent in the data flash, and finally a reset to make it active.

Table 13. Data Flash Bit Definitions

Address	Meaning	Bytes	Initial Value	Bit Definition
0x00	7-bit I2C slave address	1	0x38	Bit 7 = Don't care Bits 6:0 = Slave address
0x01	Product ID (do not change)	2	0x2310	-
0x03	Operation Mode After Startup	1	0x00	Set operation mode values
0x04-0xFF	Reserved (do not use)	-	-	-

Downloaded from Arrow.com.

8. Assembly Restrictions, Operation, Integration Notes, and Storage

When implementing the RRH46410 in electrical circuit boards, a gas sensor module may react to chemicals during the assembly process and to outgassing components, such as resins from the printed circuit board (PCB) assembly. A standard soldering profile can be used to assemble the RRH46410 on the user's PCB and should fulfill the IPC/JEDEC J-STD-020C Standard ("Moisture/Reflow Sensitivity Classification for Non-hermetic Solid State Surface Mount Devices"). A typical lead-free reflow solder profile is shown in Figure 17. After assembly, an outgassing of the PCB and electronic components must be considered, especially when operating the sensor module at elevated temperatures. This will influence the sensor module signal and may dominate the air quality reading.

A PCB heat treatment before assembling the RRH46410 is recommended. After the gas sensor module assembly, no coating, cleaning, or ultrasonic bath should be applied to the PCB. The Operation Mode "Sensor cleaning" should be executed after production (best at the end-customer) once in order to remove contaminations from assembly or storage of sensor module parts. This thermal MOx cleaning will remove major contaminations of solder vapor from the MOx surface. Store the sensor module in an antistatic metallic bag with a low TVOC background after the sensor module is removed from its original packaging or the assembled PCB is populated. The optimal storage conditions are < 1ppm TVOC, < 10ppb O3, < 10ppb NO2, 10°C to 50°C, and humidity levels within 20% to 80%RH. If the sensor is stored within these conditions, no sensor degradation is expected for a shelf life of at least 10 years (storage time). If the sensor module is stored outside of these conditions for extended periods of time, the readings can exhibit a temporary offset. The sensor module can be reconditioned and returned to its calibration state by operation for 24 hours to 48 hours in clean air.

Note: The sensor must not be stored in pure nitrogen. This will lead to sensor failure.

To obtain the complete *Renesas Environmental Sensor Guidelines* with detailed information on assembly, material outgassing, test and validation procedures, contact Renesas Technical Support. A short version is available on the product webpage.

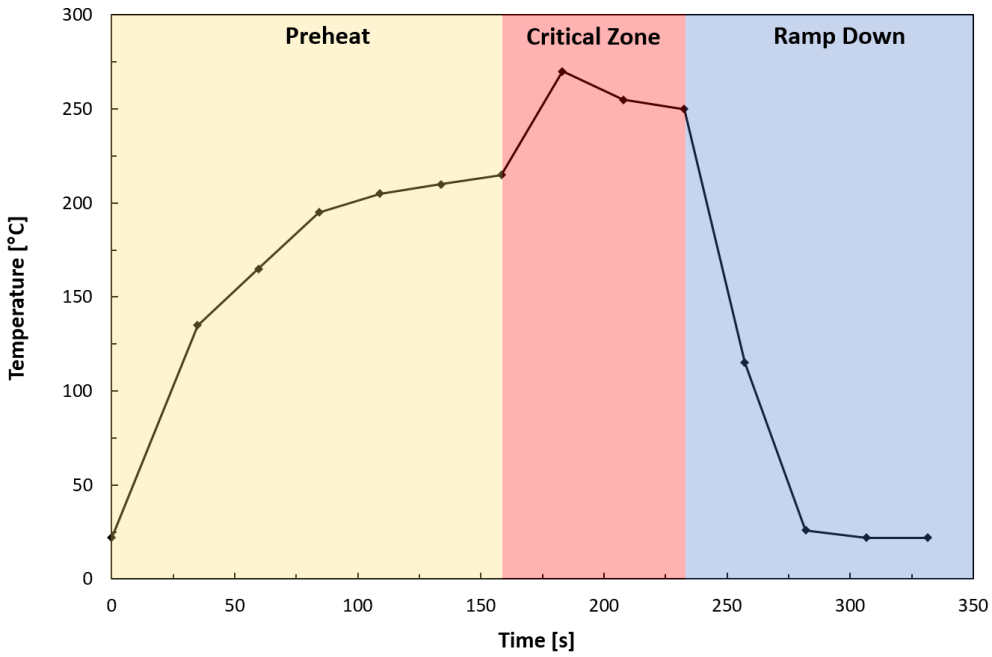

Figure 17. Typical Solder Profile

Downloaded from Arrow.com.

9. Test and Calibration

As a unique feature, all sampled gas sensor modules are fully tested during Renesas' final test. The final test parameters in Table 14 are applied for each RRH46410. All sensor modules are pre-stabilized in the final test although the user may see a slight change in the module's signal during an initial warm-up phase during the first operation. The gas sensor module qualification is based on JEDEC (JESD47) and its subsequent standard (JESD22, JESD78, etc.); it has been qualified for a lifetime of 10 years. Renesas has proven a MOx lifetime of over 20 years in actual continuous operation in conditions without exposures to stressful environments.

Table 14. Final Test Parameters

Test	Test Object	Parameters	Test Results Saved in NVM?
Electrical	ASIC	Voltages, current consumption, frequencies, scan pattern	No
Electrical	Module	Calibration conditions, tracking ID, resistances	Yes
Gas	Module	Sensitivity parameters (slope and intercept) at stimulation with different gas concentrations	Yes
Gas	Module	Pre-stabilization	No

10. Package Outline Drawings

The package outline drawings are located at the end of this document and are accessible from the Renesas website. The package information is the most current data available and is subject to change without revision of this document.

11. Marking Diagram

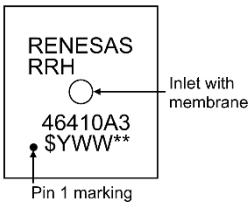

- Line 1: Renesas
- Lines 2 and 3: Truncated part number
- Line 4:
  - First character: Mark location code
  - Second character: Year (for example, 3 = 2023)
  - Third and fourth character: Work week
  - Fifth and sixth character: Sequential code

12. Ordering Information

Part Number	Package Description	Carrier Type	Temperature Range
RRH46410-A3R	4.5 × 4.0 × 0.950 mm 20-LGA	Tape and Reel	-40°C to +85°C
RRH46410-A3V		Tray	
RRH46410-EVK	RRH46410 Evaluation Kit including the RRH46410 Sensor Board, Communication Board (USB Interface), and USB-C cable. The Evaluation Software is available for download free of charge on the product page.		
RRH46410-EVK-DB	RRH46410 Sensor Board as spare part for RRH46410 Evaluation Kit.		

Downloaded from Arrow.com.

13. Revision History

Revision	Date	Description
1.02	Mar 26, 2025	▪ Updated the upper limit of supply voltage range and Input High and Low Level Voltage. ▪ Updated the operating temperature. ▪ Update Sleep and Idle Currents ▪ Added read debug data command and corresponding information. ▪ Expanded the description of GPIO1 and GPIO2. ▪ Expanded the description of cleaning operation mode. ▪ Updated checksum description. ▪ Updated Get Measurement Results command. ▪ Corrected measurement result encoding. ▪ Added a marking diagram. ▪ Unified operation mode naming. ▪ Updated available evaluation hardware. ▪ Completed other minor edits.
1.01	Feb 15, 2024	▪ Updated Power Consumption, Peak Supply Current, and Average Supply Current values in Electrical Specifications. ▪ Updated Features bullets on first page.
1.00	Oct 5, 2023	Initial release.

Downloaded from Arrow.com.

IMPORTANT NOTICE AND DISCLAIMER

RENESAS ELECTRONICS CORPORATION AND ITS SUBSIDIARIES (“RENESAS”) PROVIDES TECHNICAL SPECIFICATIONS AND RELIABILITY DATA (INCLUDING DATASHEETS), DESIGN RESOURCES (INCLUDING REFERENCE DESIGNS), APPLICATION OR OTHER DESIGN ADVICE, WEB TOOLS, SAFETY INFORMATION, AND OTHER RESOURCES “AS IS” AND WITH ALL FAULTS, AND DISCLAIMS ALL WARRANTIES, EXPRESS OR IMPLIED, INCLUDING, WITHOUT LIMITATION, ANY IMPLIED WARRANTIES OF MERCHANTABILITY, FITNESS FOR A PARTICULAR PURPOSE, OR NON-INFRINGEMENT OF THIRD-PARTY INTELLECTUAL PROPERTY RIGHTS.

These resources are intended for developers who are designing with Renesas products. You are solely responsible for (1) selecting the appropriate products for your application, (2) designing, validating, and testing your application, and (3) ensuring your application meets applicable standards, and any other safety, security, or other requirements. These resources are subject to change without notice. Renesas grants you permission to use these resources only to develop an application that uses Renesas products. Other reproduction or use of these resources is strictly prohibited. No license is granted to any other Renesas intellectual property or to any third-party intellectual property. Renesas disclaims responsibility for, and you will fully indemnify Renesas and its representatives against, any claims, damages, costs, losses, or liabilities arising from your use of these resources. Renesas' products are provided only subject to Renesas' Terms and Conditions of Sale or other applicable terms agreed to in writing. No use of any Renesas resources expands or otherwise alters any applicable warranties or warranty disclaimers for these products.

(Disclaimer Rev.1.01)

Corporate Headquarters

TOYOSU FORESIA, 3-2-24 Toyosu,
Koto-ku, Tokyo 135-0061, Japan
www.renesas.com

Trademarks

Renesas and the Renesas logo are trademarks of Renesas Electronics Corporation. All trademarks and registered trademarks are the property of their respective owners.

Contact Information

For further information on a product, technology, the most up-to-date version of a document, or your nearest sales office, please visit www.renesas.com/contact-us/.

© 2026 Renesas Electronics Corporation. All rights reserved.

Downloaded from Arrow.com.

Package Outline Drawing

Package Code:LHW20
20-LGA 4.5 x 4.0 x 0.950 mm Body, 0.50mm Pitch
PSC-4957-01, Revision: 01, Date Created: August 1, 2023

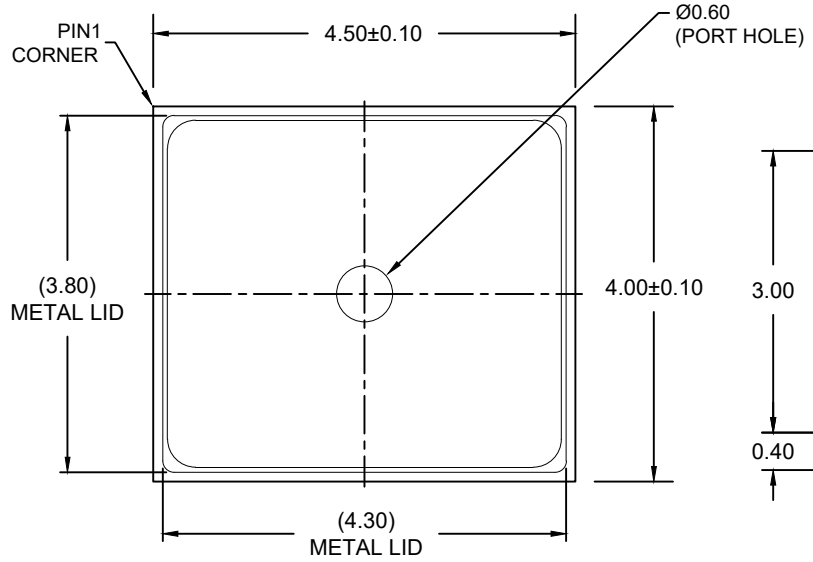

TOP VIEW

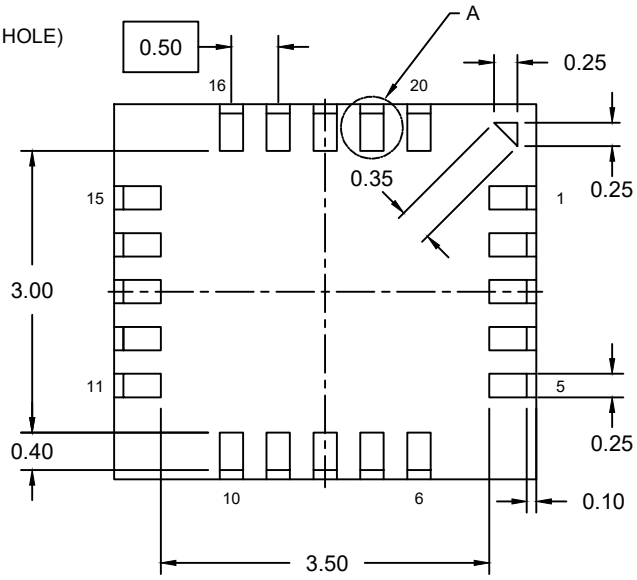

BOTTOM VIEW

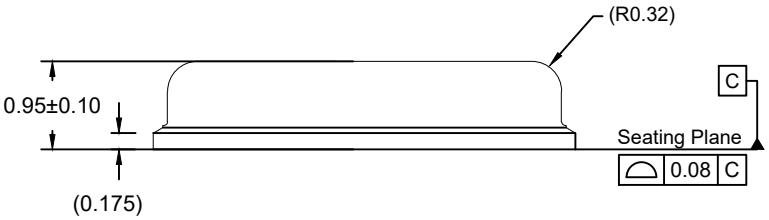

SIDE VIEW

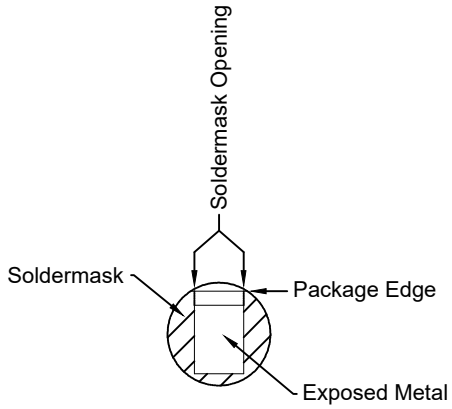

Detail A

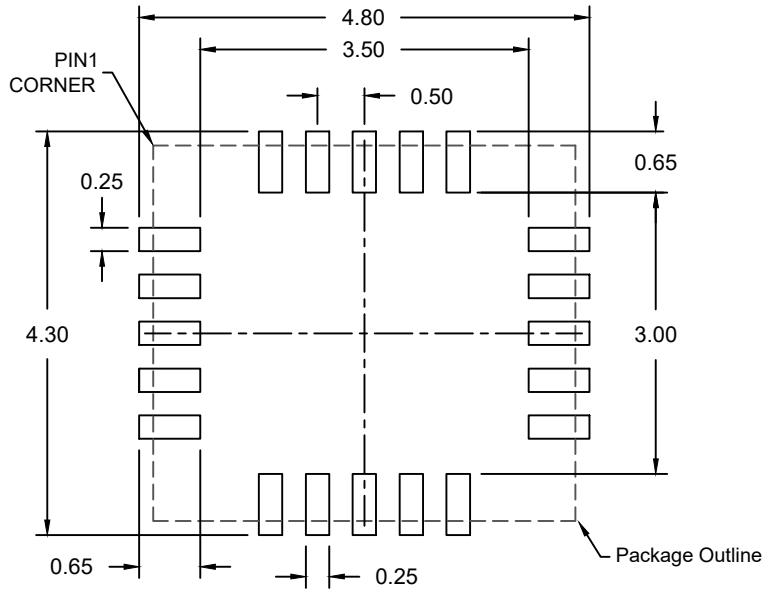

RECOMMENDED LAND PATTERN
(PCB Top View, NSMD Design)

NOTES:

1. JEDEC compatible
2. All dimension are in mm, angles in degrees.
3. Use ±0.05 mm for non-toleranced dimensions.
4. Numbers in ( ) are for reference only.

© Renesas Electronics Corporation

Downloaded from Arrow.com.