Force Sensor HSFPAR304A Data sheet

1. Product No.

HSFPAR304A

2. General description

・This product is a force sensor using effect of piezo resistive bridge circuit formed on silicon diaphragm of MEMS sensor element.
・Piezo resistance is changed according to strain by applying force to the diaphragm.

3. Features

・Small footprint and low profile provide user design flexibility for many products.
・High sensitivity and good linearity provide user design flexibility for many products. Accurately detect minute force of less than 0.01 N.
・High durability with no characteristics change after 1 million cycles.
・Stopper mechanism protect the MEMS sensor element from overload.
・IATF16949/AEC-Q200 compatible products of in-vehicle
・Indication as for the ROHS compliant

ALPSALPINE ALPSALPINE CO.,LTD.
HEAD OFFICE
1-7, YUKIGAYA-OTSUKA-MACHI, OTA-KU, TOKYO, 145-8501, JAPAN
PHONE +81(3)3726-1211 FAX +81(3)3728-1741
NAGAOKA PLANT
1-3-5, HIGASHITAKAMI-MACHI, NAGAOKA-CITY, NIIGATA-PREF, 940-0006, JAPAN
PHONE +81 258-24-4111 FAX +81 258-24-4110

This specification is subject to change without notice.
Confidential

Downloaded from Arrow.com.

4. Sensor structure and measurement principle

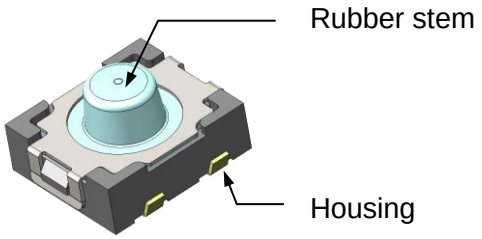

Fig.1 Force sensor : HSFPAR304A

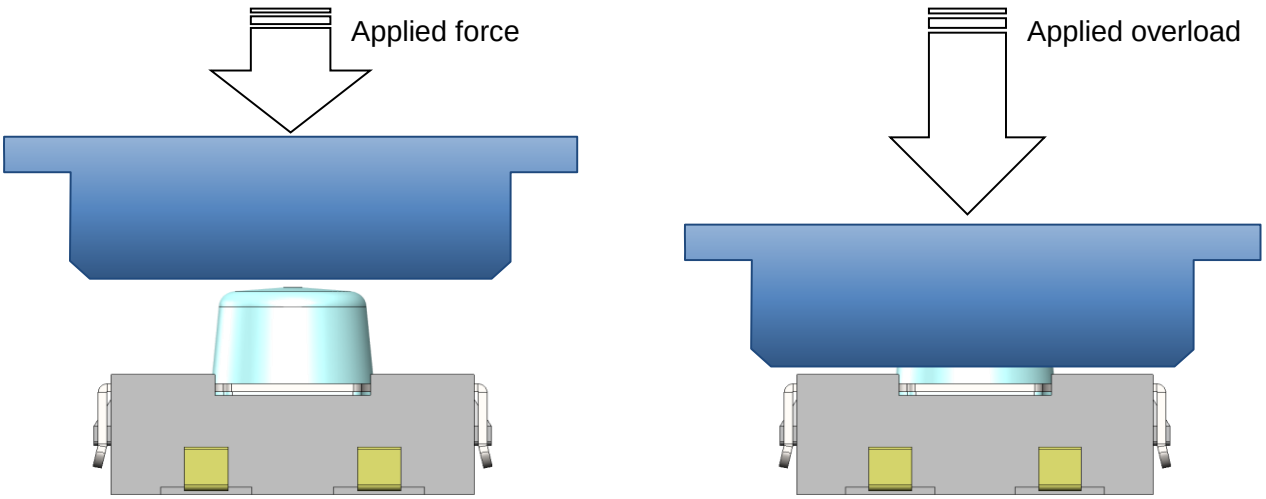

Please press the force sensor with a flat part that is larger than the housing.
Rubber stem helps to provide pre-travel.

The housing prevent to apply the overload to the MEMS sensor element that is installed inside the housing.

Fig.2 Operating principle and mechanical features

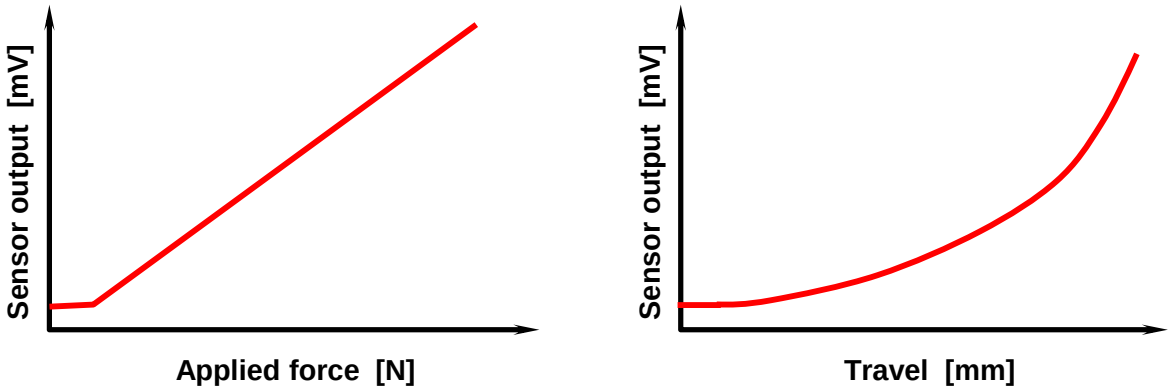

Fig.3 Sensor output in response to applied force and travel.

Downloaded from Arrow.com.

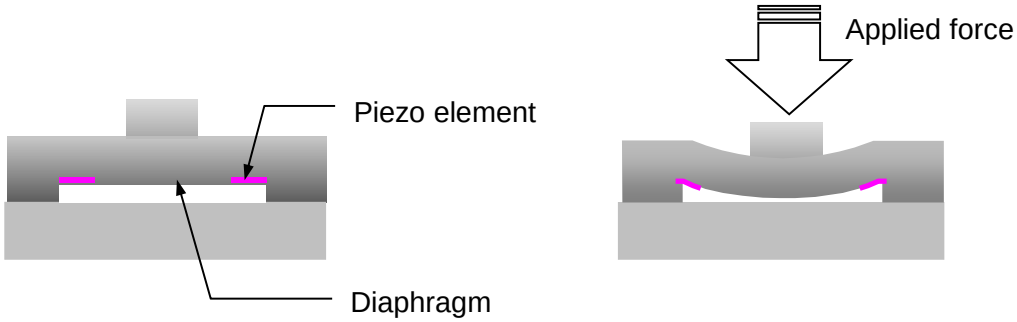

Fig.4 Operating principle of MEMS sensor element

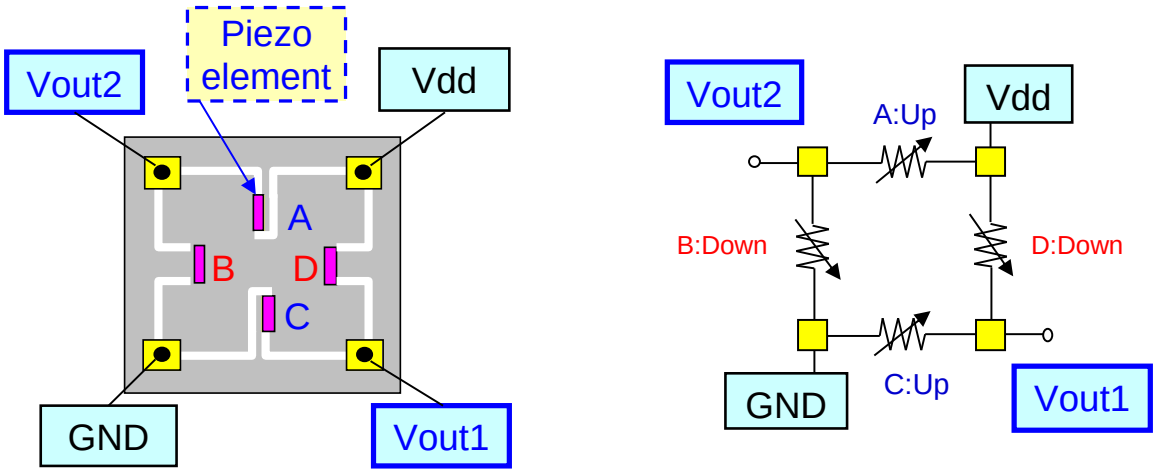

Fig.5 Schematics of MEMS sensor element

(1) The diaphragm is deformed by the force applied to the MESM sensor element.

(2) The resistance of piezo elements on the diaphragm is changed by getting the strain due to the diaphragm deformation.

(3) Analog voltage output is changed in response to the applied force. (Vout = Vout1 - Vout2)

Downloaded from Arrow.com.

5. Functional block diagram

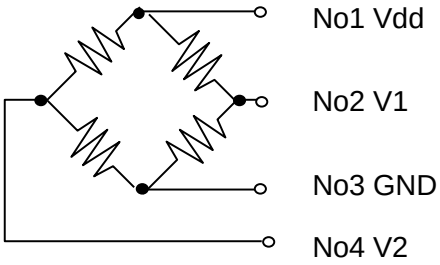

Pin No.	Name	Function
No1	Vdd	Supply Voltage
No2	V1	Output(+)
No3	GND	GND
No4	V2	Output(-)

***Output = V1-V2**

6. Full view

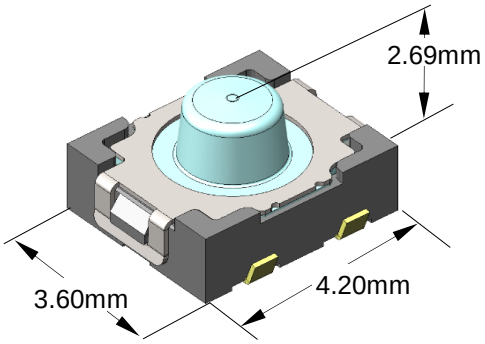

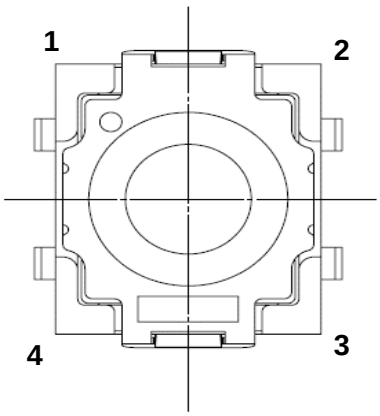

TOP VIEW

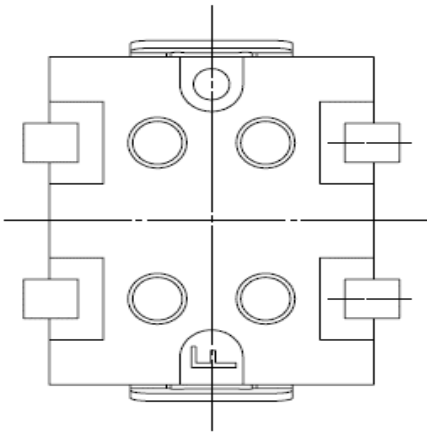

BOTTOM VIEW

Pin No.	Name	Function
1	Vdd	Supply Voltage
2	V1	Output(+)
3	GND	GND
4	V2	Output(-)

Confidential

Downloaded from Arrow.com.

7. Recommended circuit

7-1. Example circuit for analog output.

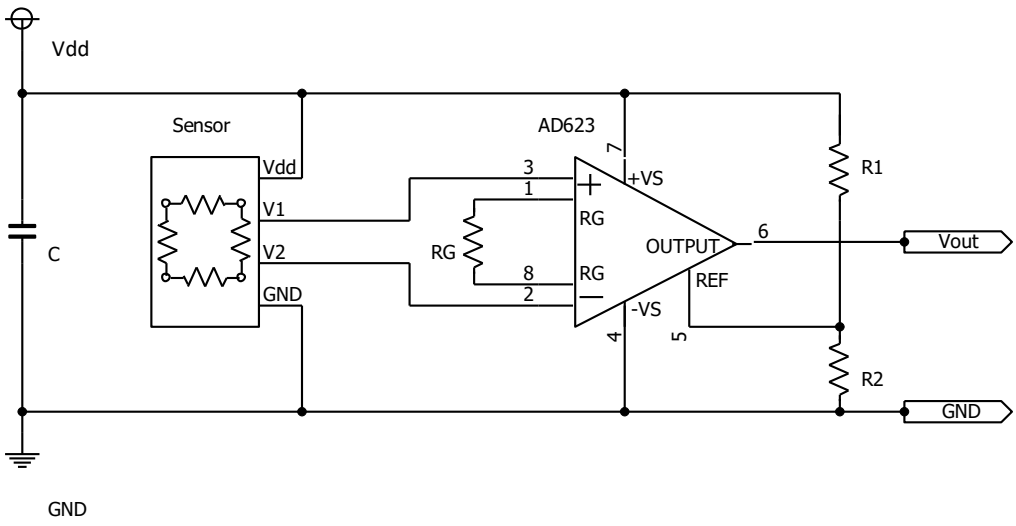

Recommended value

Source Voltage	Vdd	[V]	3.3
Instrumentation amplifier	-		AD623 *1 AD8237 *1 AD8420 *1 INA317 *1 INA333 *1
Gain adjustment Resistance	RG	[kΩ]	4.0
Offset adjustment Resistance	R1	[kΩ]	10.0
	R2	[kΩ]	3.0
Capacitance	C	[uF]	0.1
Sensitivity	Sens	[mV/N]	(274.6)

*1 The listed amplifier is an example.
Our company does not guarantee the operation for the products listed above.
These are depend on the circuit design, please check in advance.

Reference

Gain = (1 + 100kΩ / RG)
Offset voltage = R2 / (R1+R2) * Vdd
OUTPUT = Gain*(V1-V2) + Offset voltage

Confidential

Downloaded from Arrow.com.

7-2. Example circuit for digital output.

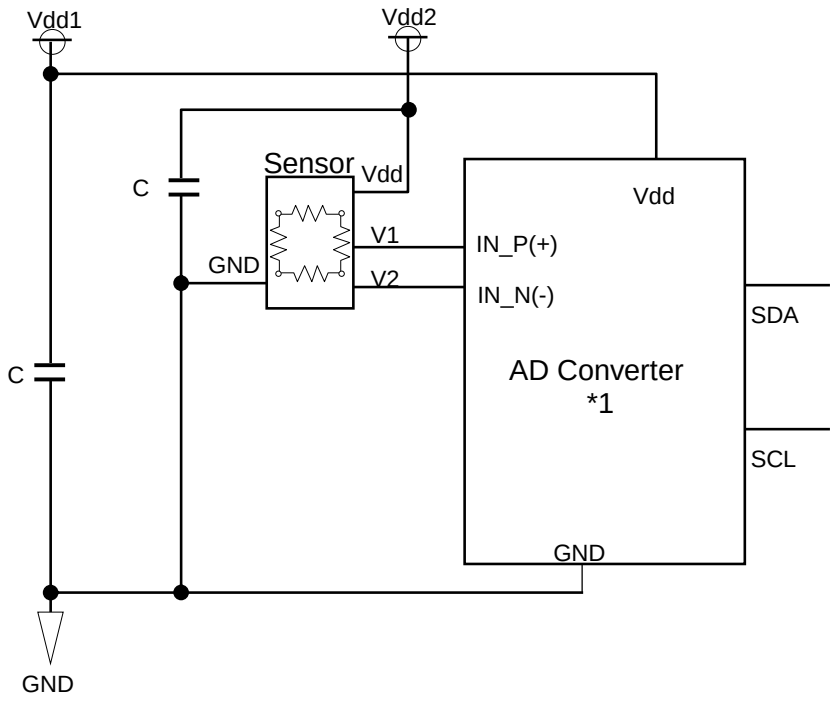

*1 Please select the appropriate AD converter to meet the requirements of the system.

*2 Please add the Instrumentation amplifier or some components as needed.

Confidential

Downloaded from Arrow.com.

8. Evaluation example

Notes
- When the gauge touches the sensor, please press the sensor slowly.
- The gauge should touch the sensor vertically.
- Please avoid to apply the overload above the maximum ratings.

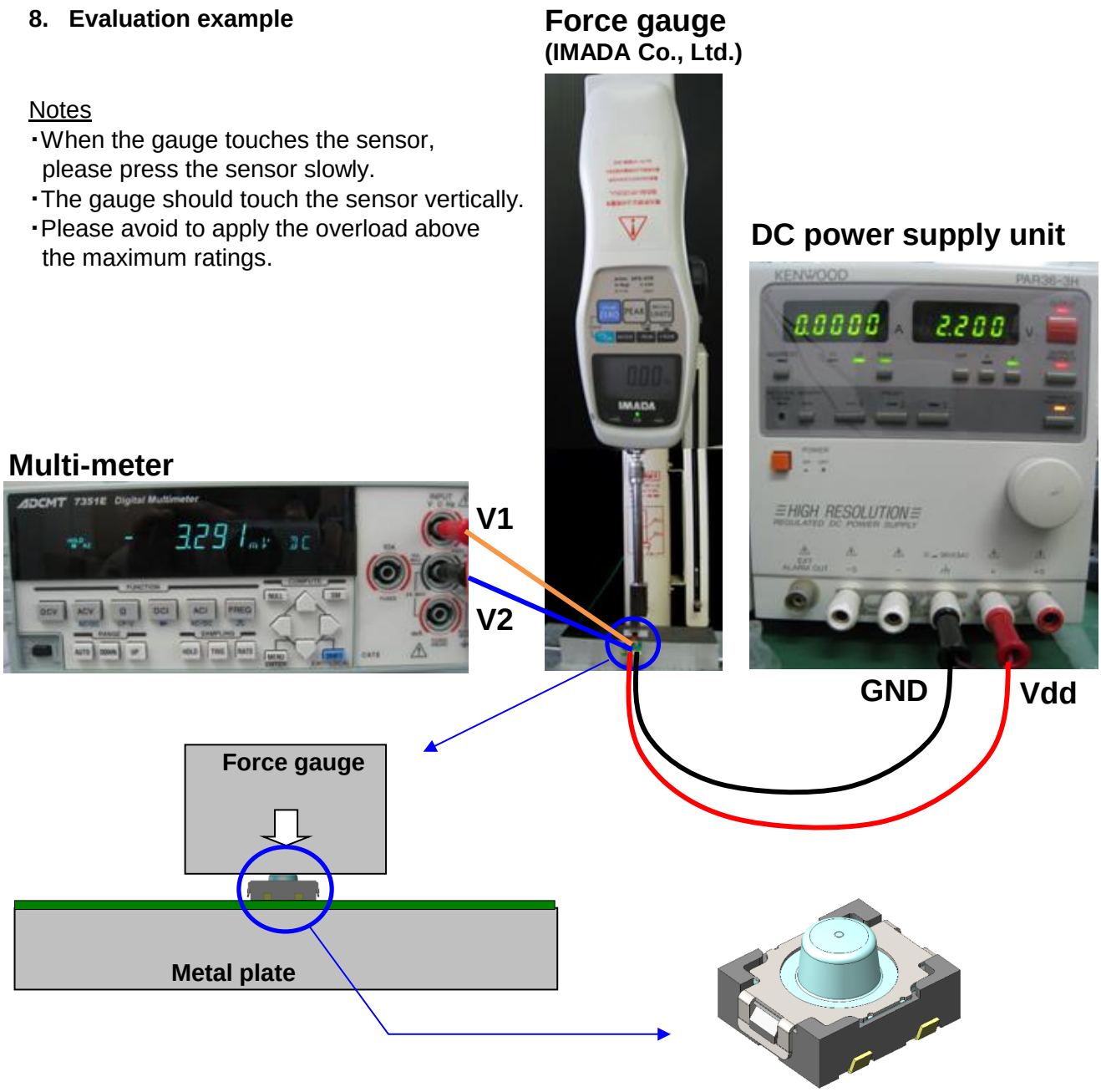

Force sensor : HSFPAR304A

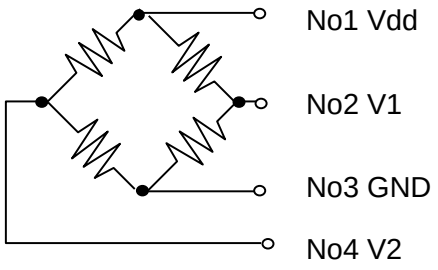

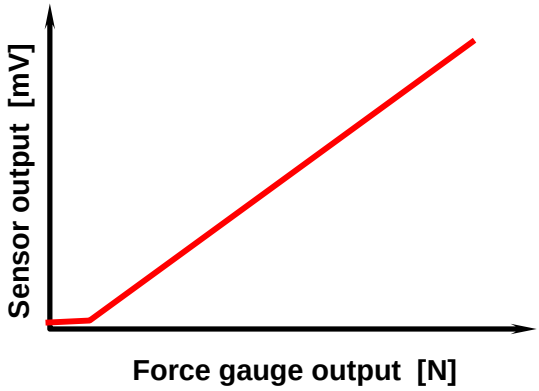

Confidential

Downloaded from Arrow.com.

9. Design guide

9-1 Precautions

・When the sensor is handled such as mounting on the PWB, please do not apply any shock to the rubber stem.

・Please mount the sensor on the PWB without any gap between the sensor bottom and PWB.

・Please do not apply force to the rubber stem from the side.

・Please press the rubber stem vertically.

・Please prevent dust contamination from the top side to the inside of the sensor.

・Recommended maximum force applied to the sensor is less than the specified value for limited force by the housing.

・Please press the force sensor with a flat part that is larger than the housing.

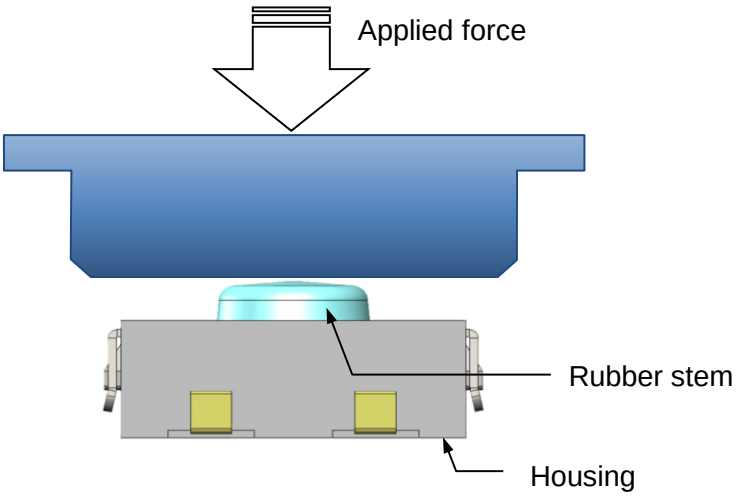

Downloaded from Arrow.com.

9-2 Design guide for flat panel

Please apply the holder to prevent the irregular movement of the panel knob and to support the knob pressing the force sensor vertically.

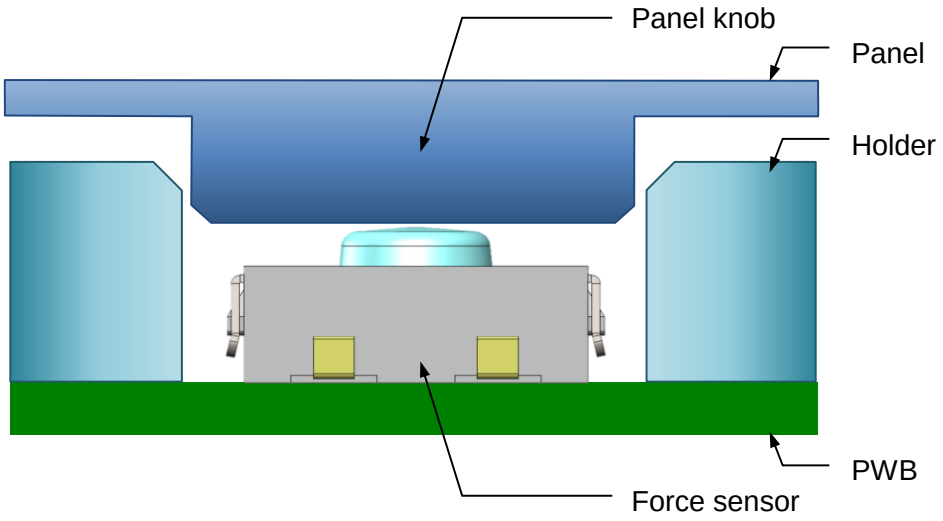

If the longer travel is required, please apply the additional rubber spring to regulate the travel and applied force to the sensor.

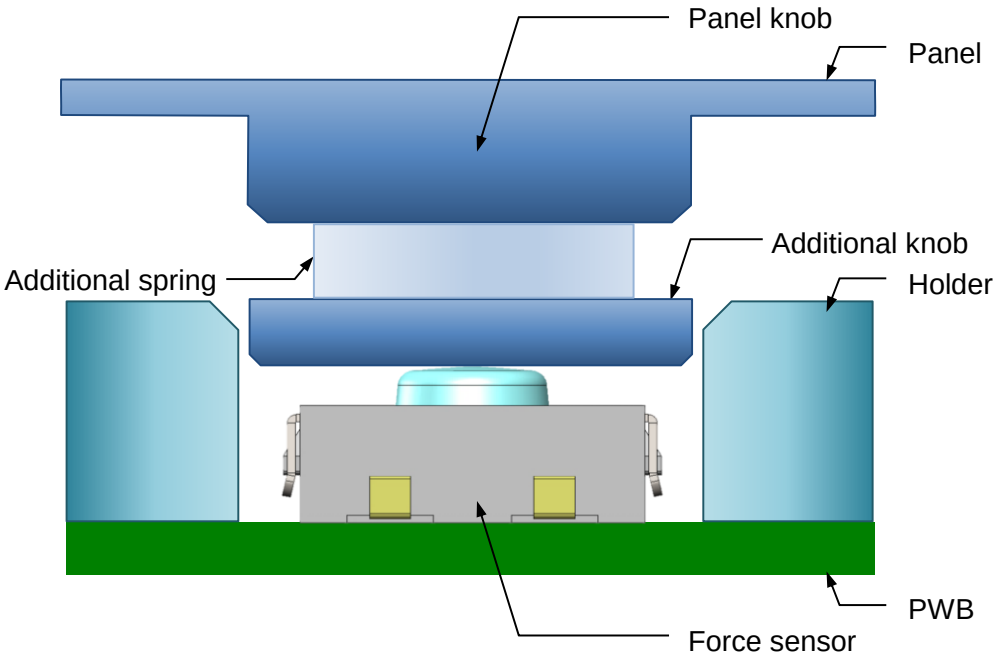

Confidential

Downloaded from Arrow.com.

10.Package dimensions

Unit [mm]			
Ref	Min.	Nom.	Max.
A	4.10	4.20	4.30
B	3.50	3.60	3.70
C	2.59	2.69	2.85
D	1.46	1.56	1.66
E	0.40	0.50	0.60

Unit [mm]			
Ref	Min.	Nom.	Max.
F		(3.00)	
G	3.97	4.17	4.37
H	1.90	2.00	2.10
I		(4.62)	

* A～D Measurement point for shipment inspection.

Top view

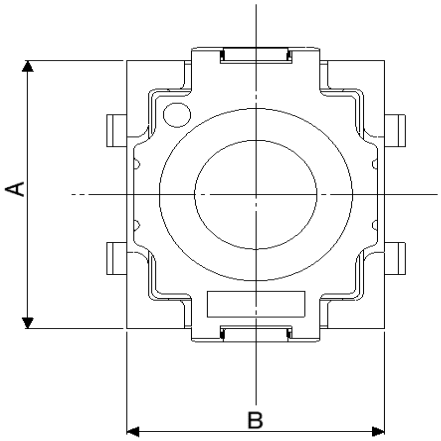

Side view

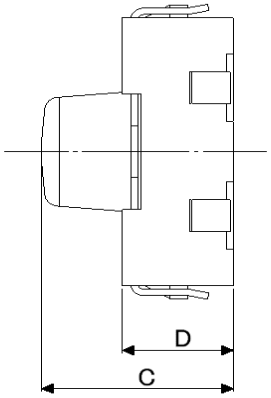

Bottom view

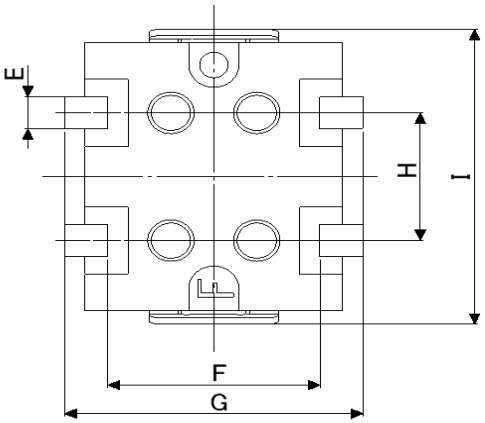

Confidential

Downloaded from Arrow.com.

11. Electrical specifications

Item	Symbol	Unit.	Specification			Notes
			min.	Typ.	max.	
Absolute Maximum Ratings						
Absolute limits supply voltage	Vlim	[V]	-6.0	-	+6.0	
Max Load Rating	Llim	[N]	-	-	200	
Storage temperature	Tstr	[ºC]	-55	-	+125	
ESD	HBM	[V]	-1000	-	+1000	2kΩ , 150pF
Durability	Drbl	[Cycles]	1000k	-	-	Load range 10N ◄► 15N
Operating conditions						
Force range	Frng	[N]	-	-	20	
Supply voltage	Vdd	[V]	1.5	-	6	
Operating temperature	Topr	[ºC]	-40	-	+85	
Electrical specifications (T=25°C)						
Sensitivity	Sens	[mV/V/N]	1.6	2.3	3.0	
Linearity	Lin	[%FS]	-	-	6.0	*FS:Full Scale
Null Offset	V0	[mV/V]	-5.6	-2.6	0.4	
Detection start force	Fstr	[N]	-	0.4	-	*1
Pre travel	Tpre	[mm]	-	0.1	-	*1
Travel range	Trng	[mm]	-	1.0	-	*1
Bridge resistance	Rbrg	[kΩ]	4.5	5.5	6.5	

*1. Not warranty items in mass production tests.

Downloaded from Arrow.com.

Bridge Resistance
: Resistance of the V1-V2 between

Null Offset
: The sensor output at 0.5N force / Vdd

Sensitivity
: The slope of the force dependent of the sensor output / Vdd

Linearity
: Linearity is the maximum error for the linear fitting line of the force dependence of the sensor output.
Linearity = (|A|+|B|)/FSx100

Pre travel
: The real force value applied to the sensor when the sensor starts detecting the external force.

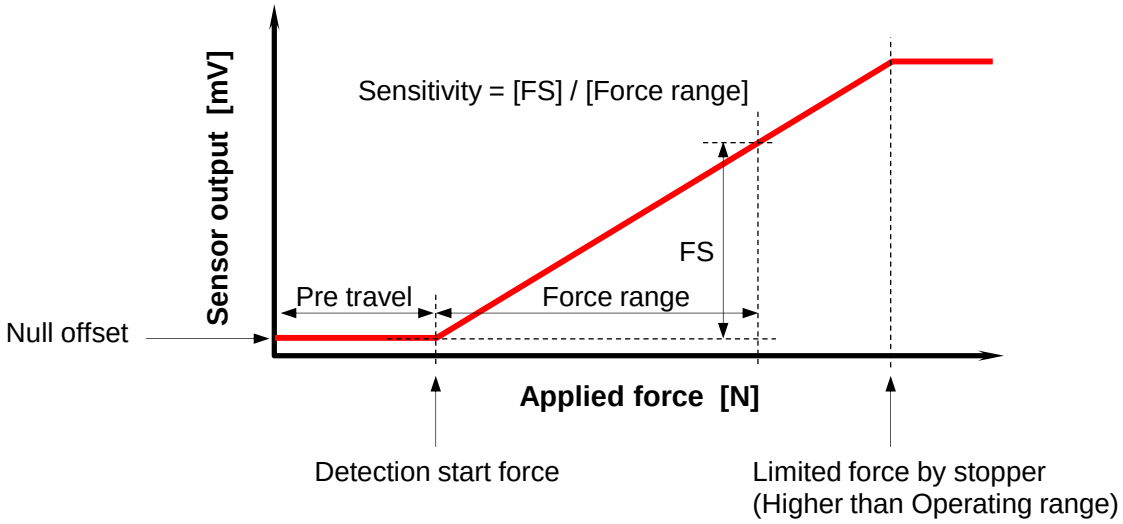

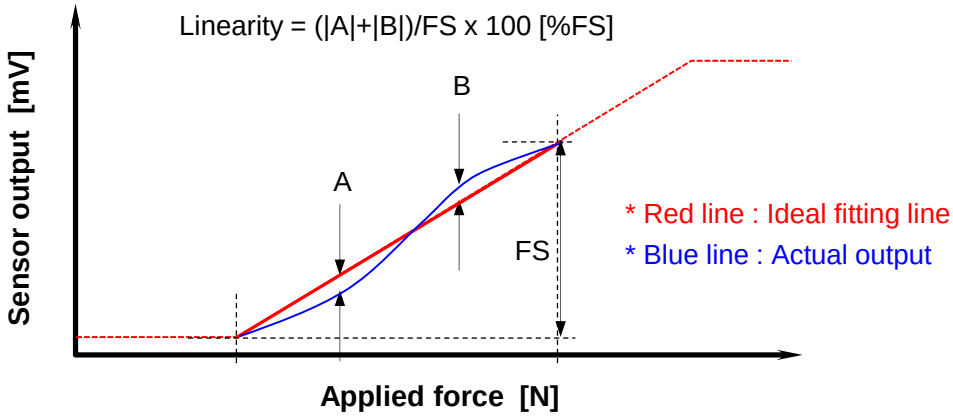

Confidential

Downloaded from Arrow.com.

12. Recommended land pattern

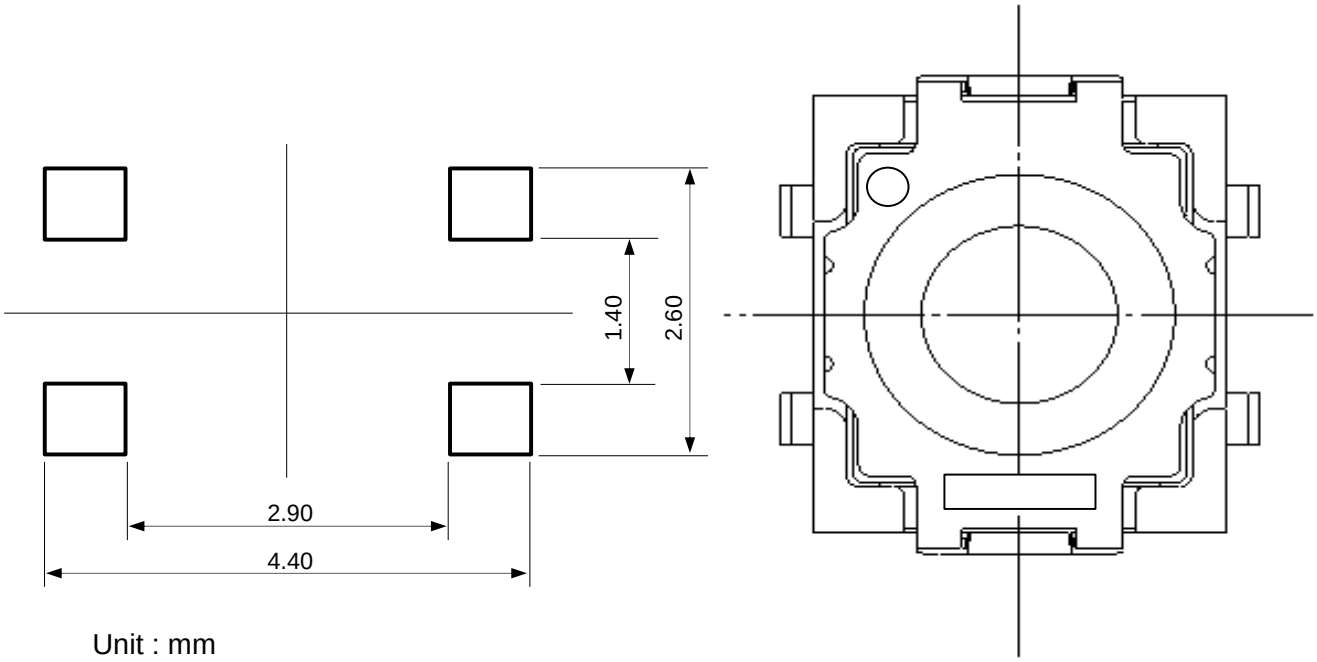

Unit : mm

Basically, devices shall be mounted by the mounting machine.
In case of manual mounting, do not touch the rubber stem.

Downloaded from Arrow.com.

13. Tape & Reel specifications

13-1. Orientation of the Product

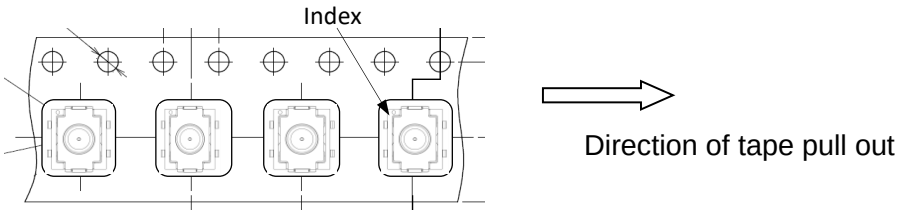

13-2. Direction of tape pull out

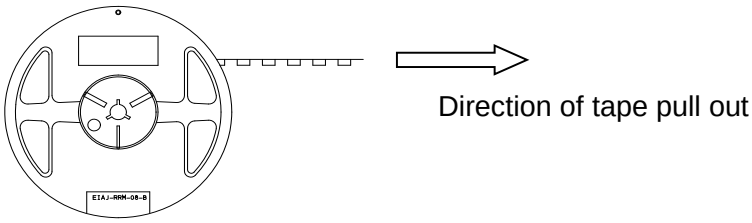

13-3. Taping

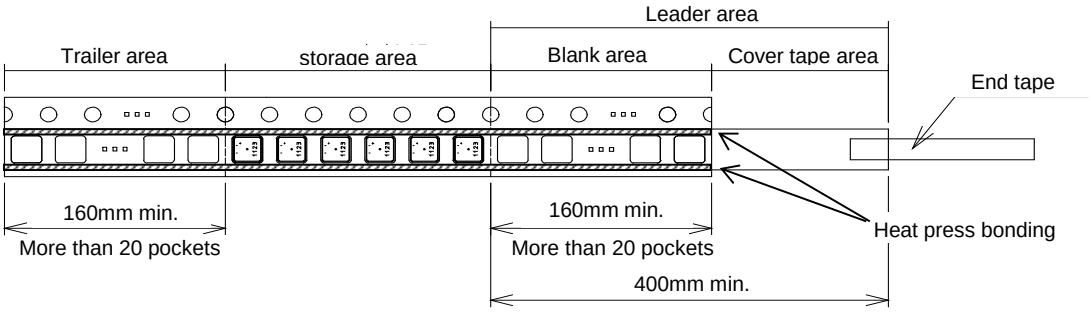

13-4. Peel strength

Peel strength of cover tape shall be 0.1N(10g)～0.7N(70g) for 300mm/min.

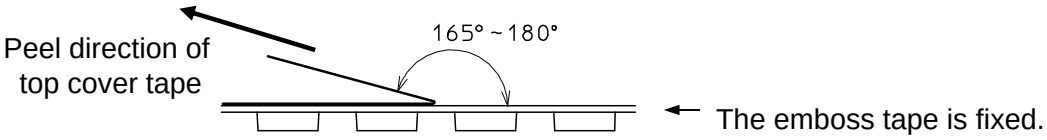

13-5. Top cover tape misalignment

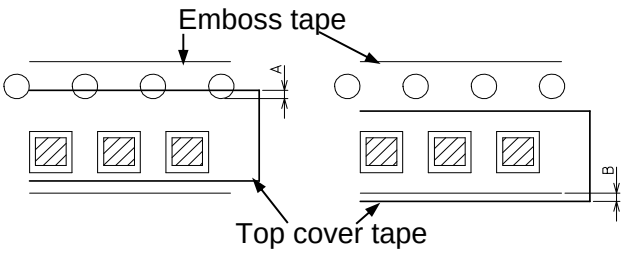

・Overlap of cover tape to the hole (A) is allowed by 0.5mm
・Overhang of top cover tape (B) is allowed by 0.5mm

Confidential

Downloaded from Arrow.com.

13-6. Emboss Tape Dimensions (Unit mm)

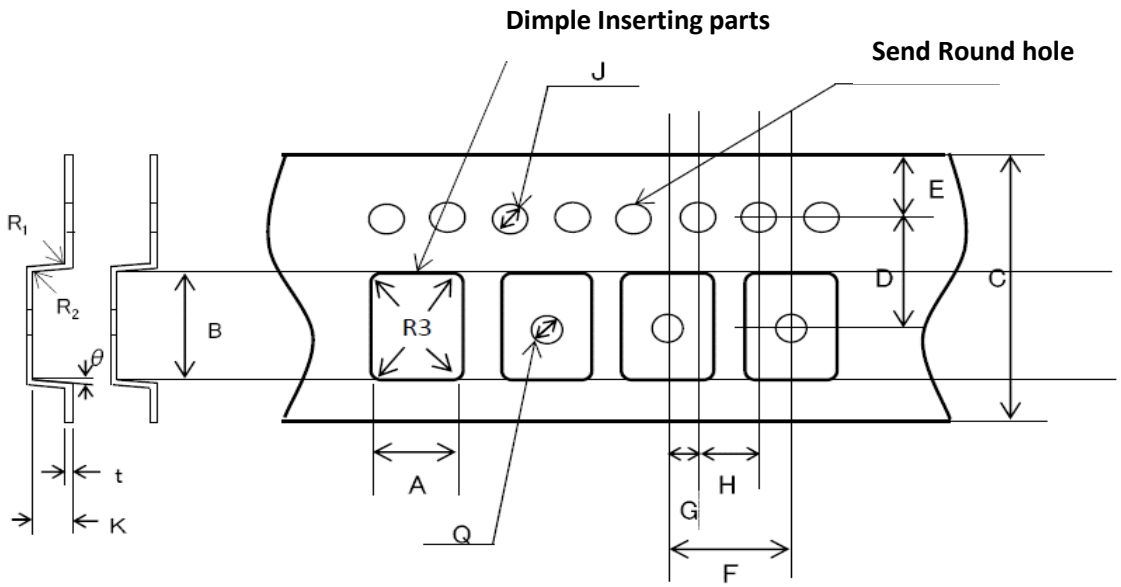

Symbol	A	B	C	D	E	F
Size	4.45±0.05	4.80±0.05	12.0±0.2	5.5±0.05	1.75±0.1	8.0±0.1

Symbol	G	H	J	K	Q	t
Size	2.0±0.05	4.0±0.1	1.5 $^{+0.1}_{0}$	2.95±0.05	1.5±0.1	0.30±0.05

Symbol	R_1	R_2	R_3	θ
Size	0.3MAX	0.3MAX	0.3MAX	5° MAX

[Unit : mm]

Confidential

Downloaded from Arrow.com.

13-7. Emboss Tape Dimensions (Unit mm)

Unit : mm

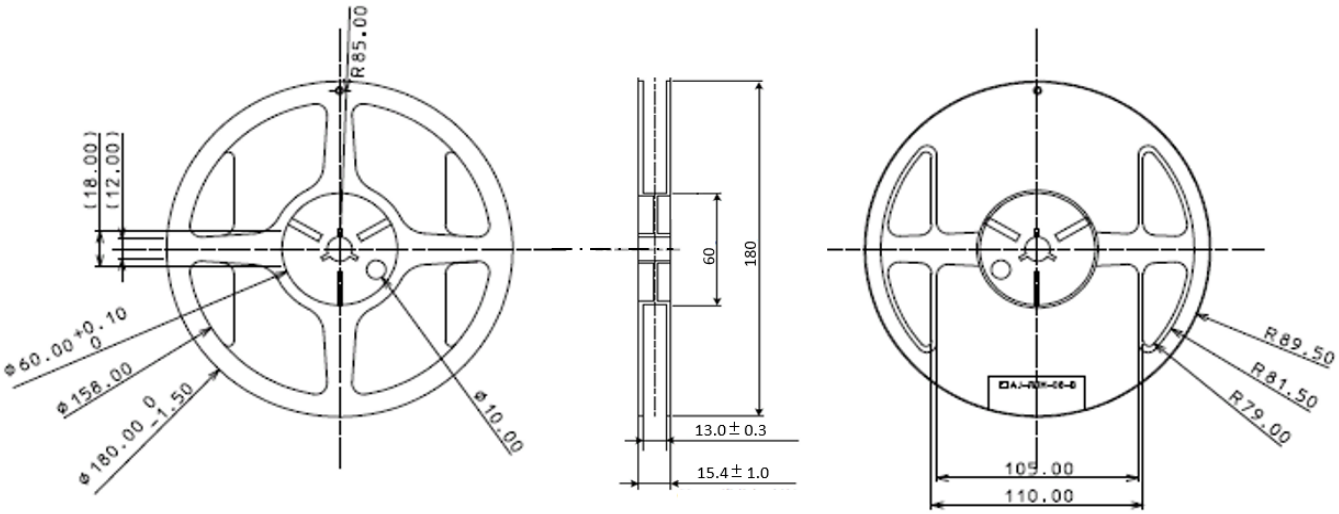

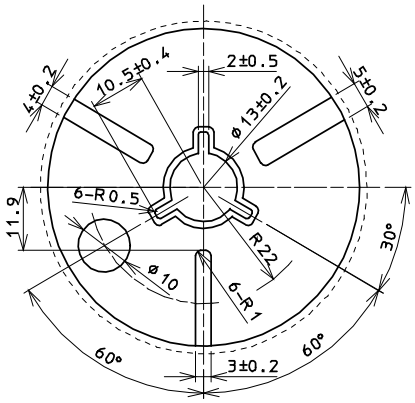

Confidential

Downloaded from Arrow.com.

13-8. Packing

・This product is packed by tape wrapping (400 pcs/reel).
・The barcode label is put on each reel.
・One reel is stored in one Bag.
・10 bags are put in 1 carton (max.4,000pcs/carton)
・Cushions are used to cover the top and bottom inside the carton.

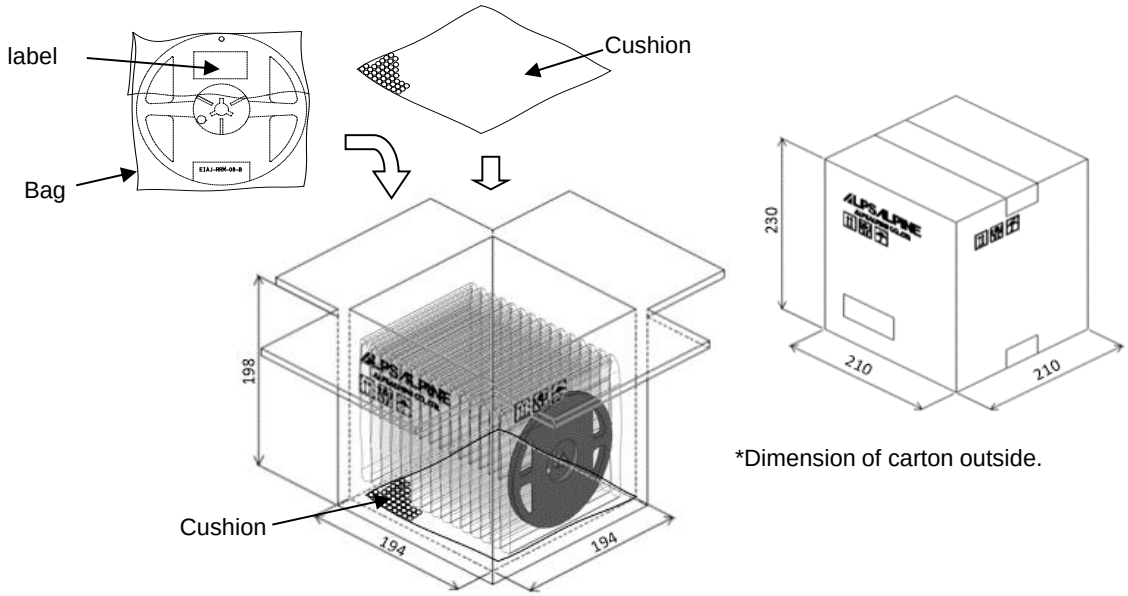

*Dimension of carton outside.

●Recommended storage condition
MSL1

●Damp-proof packing
None

●Stacking height of carton
Maximum 5cartons

●Minimum Order Quantity
Standard Packing Quantity
400 pcs

Confidential

Downloaded from Arrow.com.

14. Legal Disclaimer

1. For the export of products which are controlled items subject to foreign and domestic export laws and regulations, you must obtain approval and/or follow the formalities of such laws and regulations.

2. Products must not be used for military and/or antisocial purposes such as terrorism, and shall not be supplied to any party intending to use the products for such purposes.

3. Unless provided otherwise, the products have been designed and manufactured for application to equipment and devices which are sold to end-users in the market, such as AV (audio visual) equipment, home electric equipment, office and commercial electronic equipment, information and communication equipment or amusement equipment. The products are not intended for use in, and must not be used for, any application of nuclear equipment, driving control equipment for aerospace or any other unauthorized use.
   With the exception of the above mentioned banned applications, for applications involving high levels of safety and liability such as medical equipment, burglar alarm equipment, disaster prevention equipment and undersea equipment, please contact an our company's sales representative and/or evaluate the total system on the applicability. Also, implement a fail-safe design, protection circuit, redundant circuit, malfunction protection and/or fire protection into the complete system for safety and reliability of the total system.

4. Before using products which were not specifically designed for use in automotive applications, please contact an our company's sales representative.

15. Notes concerning patent

Except for the structure of this product, Our company will not indemnify, defend and hold harmless you from and against any third party's intellectual properties rights such as patents even if examples of use for this product are shown in this documents, you shall do patent clearance search for your product incorporating this product.

Downloaded from Arrow.com.

16. HANDLING NOTES

16-1 RECOMMENDED REFLOW PROFILE

1.Temperature profile
Peak temperature： 250 ℃ or less, within 10 seconds.

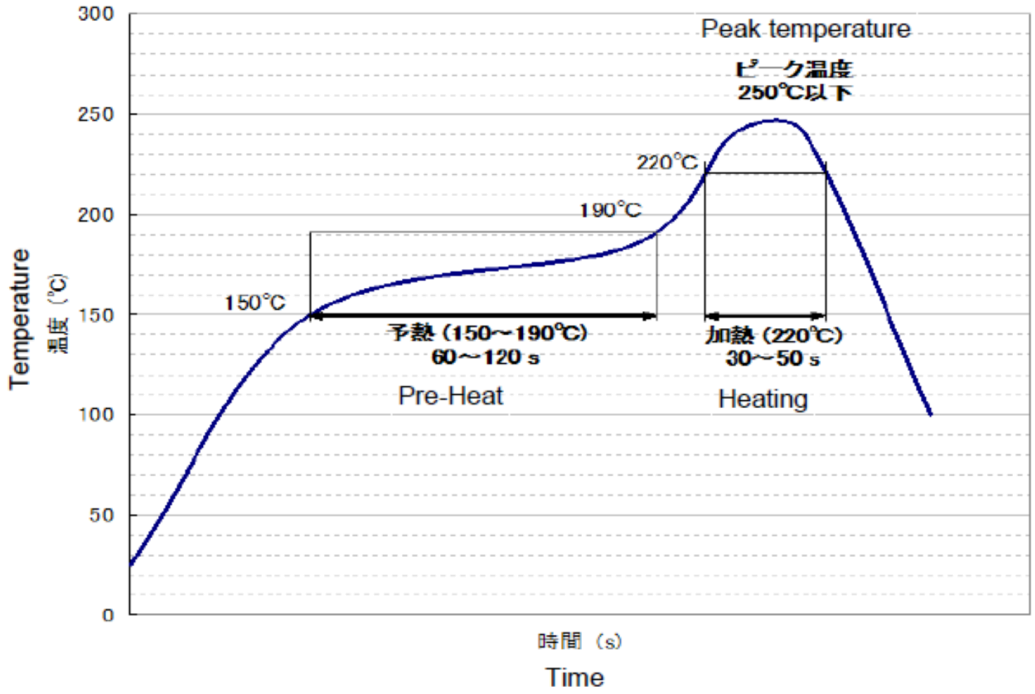

2. Max : 2 times , No repair

3. Sensor terminals and PCB.
Upper face shall be free from flux prior to soldering.

4. Following the soldering process,
do not try to clean the sensor with a solvent or the like.

5. Recommended solder paste :
M705-GRN360-K2 (SENJYU METAL INDUSTRY CO.,LTD) or equivalent

6. The thickness of solder paste : 0.12mm

7. When chip components is soldered on the back side of PCB automatic flow soldering,
after this sensor soldered by reflow soldering.
flux will possibly creep up at the exterior wall of the housing and penetrate
into the housing due to flux ejection.
therefore, when the PCB is designed,
please do not locate through holes adjacent to the sensor mounted area.

Confidential

Downloaded from Arrow.com.

8. As the conditions vary somehow depending on the kind of reflow soldering equipment, please make sure you have the right one before use.

9. As the sensor sensitivity may deteriorate when heat is applied repeatedly, reflow soldering should be performed in the shortest period and at the lowest temperature possible.

10. Safeguard the sensor assembly against flux penetration from its top side.

16-2 SOLDERING, BOARD MOUNTING PROCESS

1. Note that if the load is applied to the terminals during soldering they might suffer deformation and defects in electrical performance.

2. Conditions of soldering shall be confirmed under actual production conditions.

3. If the stem is given stress from the side, it may result in damages to sensor functions. Therefore please handle it with extreme care. When the sensor is carried, any shock shall not be applied to the stem.

4. As this force sensor is designed for reflow soldering, if you place it at the edge of PCB for convenience, then flux may get into the sliding part of the sensor during automatic dip soldering after being mounted, so do not apply auto dip after being mounted.

5. Install so that there is no gap between the bottom of the sensor and the circuit board.

6. As the sensor sensitivity may deteriorate when heat is applied repeatedly, reflow soldering should be done within the recommended conditions.

7. Nozzle pressure for sensor mounting must be less than 8N in static load.

16-3 WASHING PROCESS

1. Following the soldering process, do not try to clean the sensor with a solvent or the like.

Downloaded from Arrow.com.

16-4 RECOMMENDED HANDLING

1. The dimensions of a hole and pattern for mounting a printed circuit board shall refer to the recommended dimensions in the engineering drawings.

2. You may dip-solder chip components on the backside of PCB after you have reflow-soldered this Sensor.
However, dip-soldering may cause flux to creep up on the wall of the housing and penetrate the sensor.
Therefore, do not design a through hole under and around the sensor.

3. Do not use the sensor in a manner that the stem will be given stress from the side.
If you push the stem from the side, the sensor may be broken.

4. Press the center of the stem. Click feel may be changed, if you press the edge.
This is because the center will be displaced, tolerances.
depending on the hinge structure or cumulative
When you use the hinge structure,
take special care so that the keytop point to press the sensor won't move.

5. The sensor will be broken, if you give larger stress than specified.
Take most care not to let the sensor be given larger stress than specified.

6. Do not give a shock when operating the sensor.
There is a risk of damage to the sensor if an impact is applied.

7. Avoid installing in a place where the board will bend.

8. If you intend to change the way of the sensor being used on your module, please let us know.

16-5 OPERATING CONDITONS

1. Since this sensor does not have sealed structure,
it may have contact failure caused by the dust from outside up to the environment.

When you use this sensor, precaution must be taken against the dust.
The followings are examples of dust invasion:

①Debris from the cut or hole of PCB in process, or wastes from the PCB protection material (e.g. newspaper, foamed polystyrene etc.) invaded the sensor.

②Flux or powdered flux produced by stacking PCB's or excess foaming invaded the sensor.

Confidential

Downloaded from Arrow.com.

2. In case this product is always used around a sulfurate hot spring where sulfide gas is generated or in a place where exhaust gas from automobiles exists, take most care due to the sensor performance might be affected.

3. Do not use this sensor in the atmosphere with high humidity or with bedewing probability, because such atmosphere may cause leak among terminals.

16-6 STORAGE

1. Products should be stored at an appropriate temperature and humidity (Recommended storage condition).
   Keep products away from chlorine and corrosive gas.
   There is a thing that influences product features when keeping it in an improper environment.

2. Long-term storage may result in poor lead solder ability and degraded electrical performance even under proper conditions.
   For those parts that are stored more than one year, solder ability should be checked before use.

3. If you don't use the product immediately, store it as delivered in the following environment: with neither direct sunshine nor corrosive gas and in normal temperatures. However, it is recommended that you should use it as soon as possible before six months pass.

4. After you break the seal, you should put the remaining in a plastic bag to separate it from the outside and store it in the same environment mentioned above.
   You should use it up as soon as possible.

5. Do not stack too many sensors for storage.

Downloaded from Arrow.com.