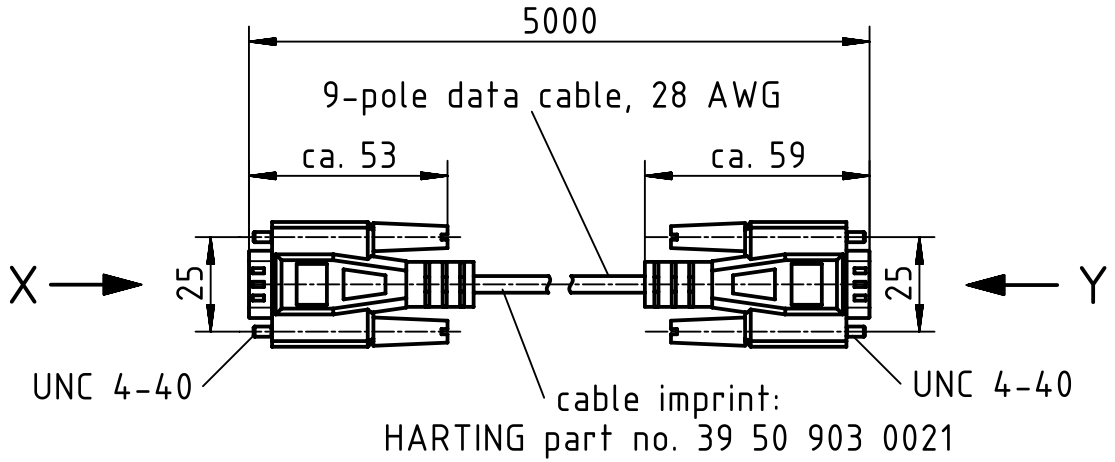


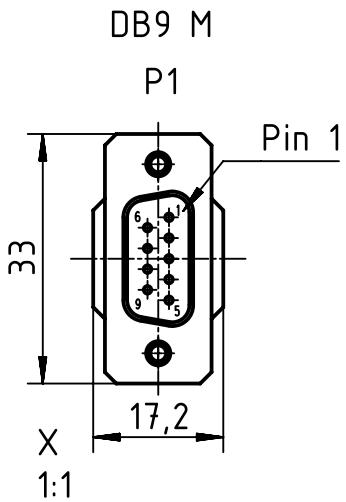


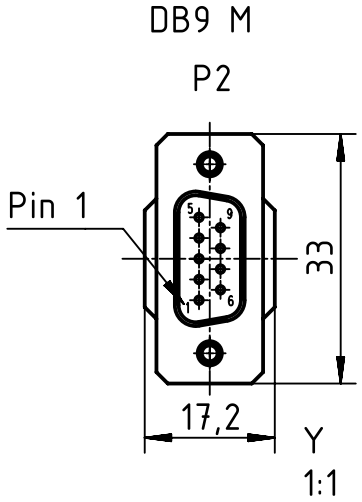


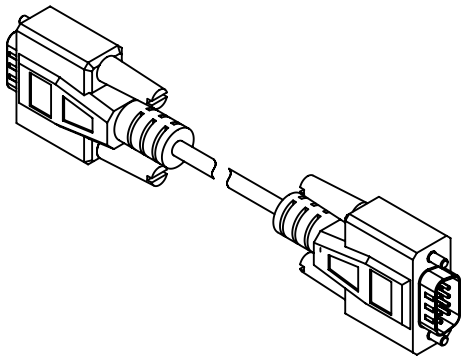

circuit diagram

| P1 | | P2 |
|---|---|---|
| 1 | ——— | 1 |
| 2 | ——— | 2 |
| 3 | ——— | 3 |
| 4 | ——— | 4 |
| 5 | ——— | 5 |
| 6 | ——— | 6 |
| 7 | ——— | 7 |
| 8 | ——— | 8 |
| 9 | ——— | 9 |
| SHIELD | | SHIELD |

All Dimensions in mm
Original Size DIN A4

Scale 1:2

Free size tol.

Ref.

Sub.

All rights reserved

Department EL PD - DE

HARTING Electric GmbH & Co. KG
D-32339 Espelkamp

| Created by | Inspected by | Standardisation | Date | State |
|---|---|---|---|---|
| FINKEV | BERGHORN | RUETERA | 2014-12-09 | Final Release |

Title: Cable SUB-D9,m-m; 5 m

Doc-Key / ECM-Nr.
100093539/UGD/003/A
500000082786

Type: TB

Number: 39 50 903 0011

Rev.: A

Page: 1/1

A4

Downloaded from Arrow.com.