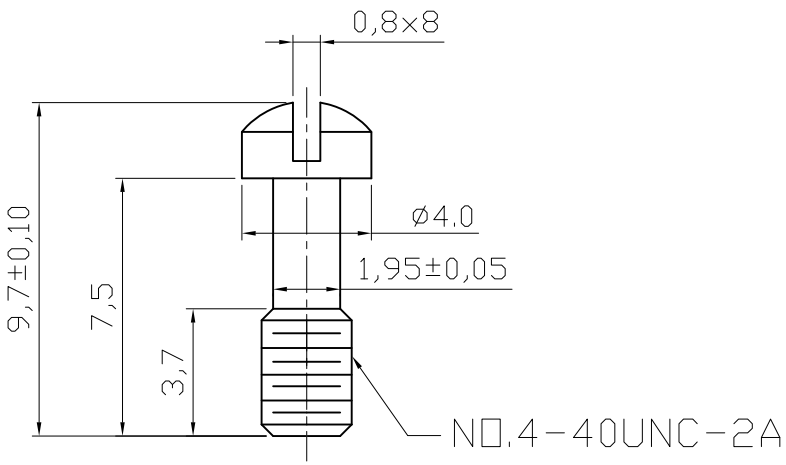

Notes
Captive Screw: STEEL
Zinc-plated with yellow chrome

Retaining Clip: STEEL
Zinc-plated with yellow chrome

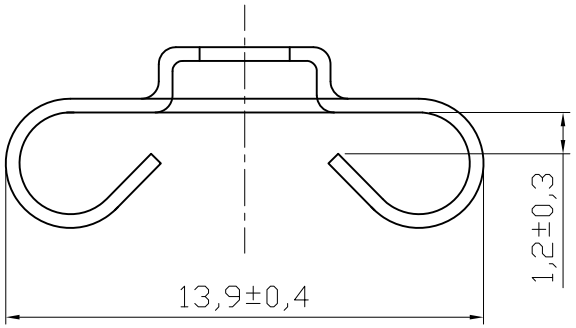

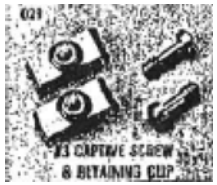

RoHS compliant

Scale	1:1						Date	Name	Customer-No.
TOLERANCE						Drawn	25.06.2009	Dean	
X.X	±0.38					Approved	25.06.2009	Hellwig	ASSMANN WSW-No. ASV-O/09/37
X.XX	±0.25								
X.XXX	±X								
DIM	TOL								Drawing-No. ASS 0527 CO rev01
X.°	±X°								
X.X°	±X°	①	Drawn	25.06.2009	Dean				
Angle	TOL	Id.	Modification	Date	Name				Replace ASS 0527 CO 24.01.2003 Sheet

ASSMANN WSW components

Downloaded from Arrow.com.