FAIRCHILD™

Is Now Part of

ON

ON Semiconductor®

To learn more about ON Semiconductor, please visit our website at
www.onsemi.com

Please note: As part of the Fairchild Semiconductor integration, some of the Fairchild orderable part numbers will need to change in order to meet ON Semiconductor's system requirements. Since the ON Semiconductor product management systems do not have the ability to manage part nomenclature that utilizes an underscore (_), the underscore (_) in the Fairchild part numbers will be changed to a dash (-). This document may contain device numbers with an underscore (_). Please check the ON Semiconductor website to verify the updated device numbers. The most current and up-to-date ordering information can be found at www.onsemi.com. Please email any questions regarding the system integration to Fairchild_questions@onsemi.com.

ON Semiconductor and the ON Semiconductor logo are trademarks of Semiconductor Components Industries, LLC dba ON Semiconductor or its subsidiaries in the United States and/or other countries. ON Semiconductor owns the rights to a number of patents, trademarks, copyrights, trade secrets, and other intellectual property. A listing of ON Semiconductor's product/patent coverage may be accessed at www.onsemi.com/site/pdf/Patent-Marking.pdf. ON Semiconductor reserves the right to make changes without further notice to any products herein. ON Semiconductor makes no warranty, representation or guarantee regarding the suitability of its products for any particular purpose, nor does ON Semiconductor assume any liability arising out of the application or use of any product or circuit, and specifically disclaims any and all liability, including without limitation special, consequential or incidental damages. Buyer is responsible for its products and applications using ON Semiconductor products, including compliance with all laws, regulations and safety requirements or standards, regardless of any support or applications information provided by ON Semiconductor. "Typical" parameters which may be provided in ON Semiconductor data sheets and/or specifications can and do vary in different applications and actual performance may vary over time. All operating parameters, including "Typicals" must be validated for each customer application by customer's technical experts. ON Semiconductor does not convey any license under its patent rights nor the rights of others. ON Semiconductor products are not designed, intended, or authorized for use as a critical component in life support systems or any FDA Class 3 medical devices or medical devices with a same or similar classification in a foreign jurisdiction or any devices intended for implantation in the human body. Should Buyer purchase or use ON Semiconductor products for any such unintended or unauthorized application, Buyer shall indemnify and hold ON Semiconductor and its officers, employees, subsidiaries, affiliates, and distributors harmless against all claims, costs, damages, and expenses, and reasonable attorney fees arising out of, directly or indirectly, any claim of personal injury or death associated with such unintended or unauthorized use, even if such claim alleges that ON Semiconductor was negligent regarding the design or manufacture of the part. ON Semiconductor is an Equal Opportunity/Affirmative Action Employer. This literature is subject to all applicable copyright laws and is not for resale in any manner.

Downloaded from Arrow.com.

March 2016

FSL3276ALR
Non-Isolated High-Voltage Buck Switch for Low Power Application in Building Automation / IoT

Features

- Built-in Avalanche Rugged SenseFET: 650 V
- Fixed Operating Frequency: 50 kHz
- No-Load Power Consumption: < 25 mW at 230 V_{AC} with External Bias; <120 mW at 230 V_{AC} without External Bias
- No Need for Auxiliary Bias Winding
- Frequency Modulation for Attenuating EMI
- Pulse-by-Pulse Current Limiting
- Ultra-Low Operating Current: 250 µA
- Built-in Soft-Start and Startup Circuit
- Adjustable Peak Current Limit
- Built-in Transconductance (Error) Amplifier
- Various Protections: Overload Protection (OLP), Over-Voltage Protection (OVP), Open Feedback Loop Protection (OFLP), AOCP (Abnormal Over-Current Protection), Thermal Shutdown (TSD)
- Fixed 650 ms Restart Time for Safe Auto-Restart Mode of All Protections

Applications

- Building Automation/ IoT
- Auxiliary Power Supply for Appliances and Industrial Applications

Description

The FSL3276ALR is configured as a non-isolated high-voltage buck switch and is ideal for low-power applications. Its peak current is adjustable down to 70 mA which enables optimum inductor size selection. The modulation control is designed to reduce standby power to 25 mW at 230 V_{AC} input. Though the Pulse Width Modulator (PWM) and SenseFET are ideally integrated for a high-performance offline buck, it can also be configured as a buck-boost or non-isolated flyback with minimal external components. The device integrates a high-voltage power regulator that enables operation without an auxiliary bias winding. An internal transconductance amplifier reduces external components for the feedback compensation circuit. The integrated PWM controller includes: 10 V regulator for no external bias circuit, Under-Voltage Lockout (UVLO), Leading-Edge Blanking (LEB), an optimized gate turn-on / turn-off driver, EMI attenuator, Thermal Shutdown (TSD), temperature-compensated precision current sources for loop compensation, and fault-protection circuitry. Protections include: Overload Protection (OLP), Over-Voltage Protection (OVP), Open Feedback Loop Protection (OFLP), and Abnormal Over-Current Protection (AOCP). FSL3276ALR offers good soft-start performance during startup. The internal high-voltage startup switch and the Burst-Mode operation with very low operating current reduce the power loss in Standby Mode. As the result, it is possible to reach power loss of 120 mW without external bias and 25 mW with external bias when input voltage is 230 V_{AC}.

Ordering Information

Part Number	Operating Junction Temperature	PKG	Packing Method	Typical Output Power[1]			
				Current Limit	$R_{DS(ON),MAX}$	85 V_{AC} ~ 265 V_{AC} & Open Frame[2]	
						Buck Application[3]	Flyback Application
FSL3276ALRN	-40°C ~125°C	7-DIP	Rail	0.30 A	30 Ω	1.2 W	2.4 W

Notes:
1. The junction temperature can limit the maximum output power.
2. Maximum practical continuous power in an open-frame design at 50°C ambient.
3. Based on 15 V output voltage condition. Output voltage can limit the maximum output power.

© 2015 Fairchild Semiconductor Corporation

Downloaded from Arrow.com.

Application Diagrams

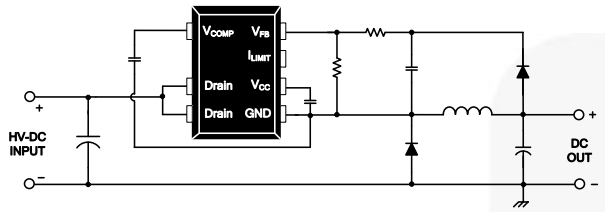

Figure 1. Buck Converter Application

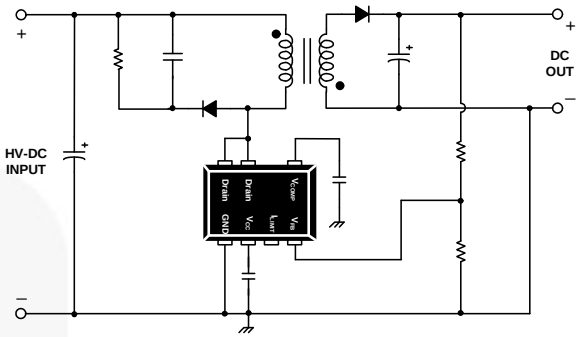

Figure 2. Non-Isolation Flyback Converter Application

Block Diagram

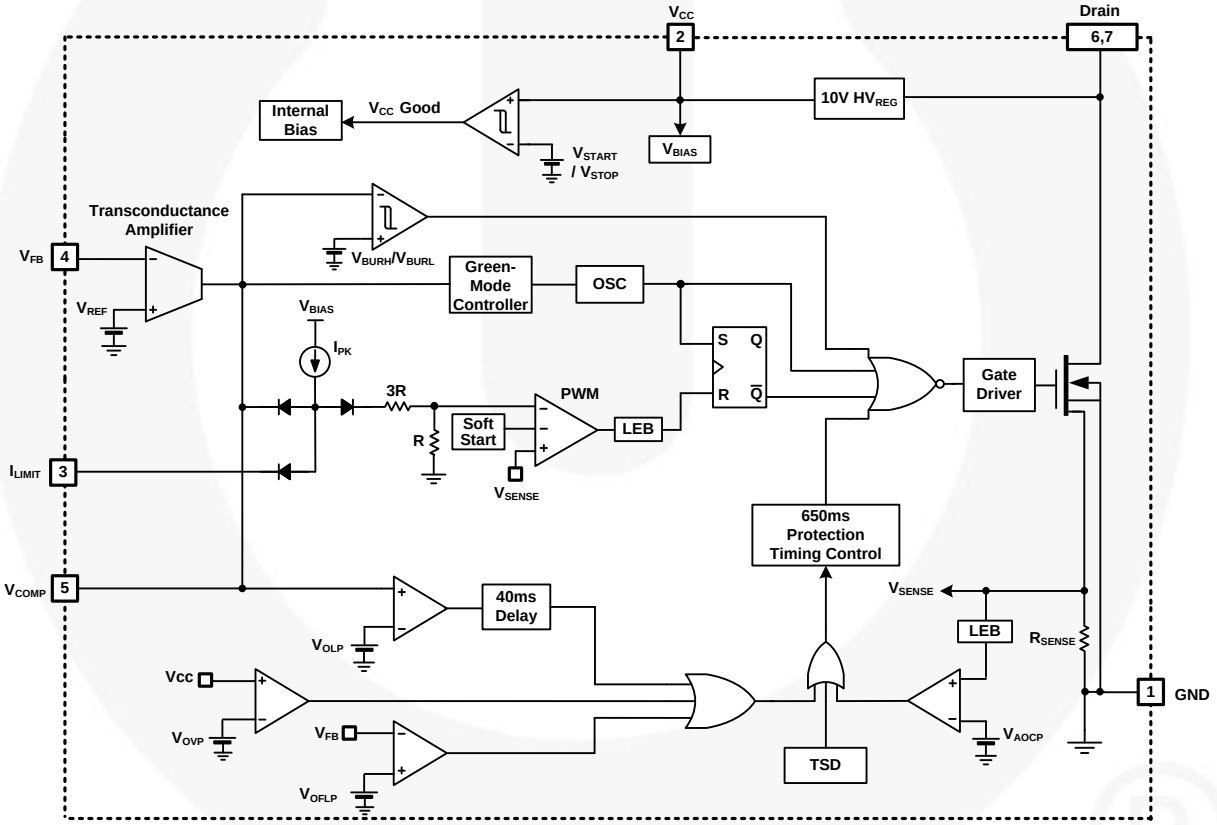

Figure 3. Internal Block Diagram

Downloaded from Arrow.com.

Pin Configuration

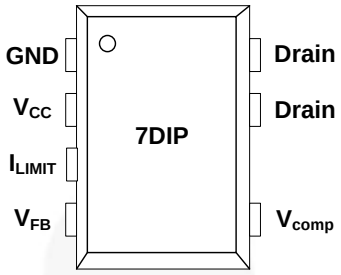

Figure 4. Pin Configuration

Pin Definitions

Pin #	Name	Description
1	GND	**Ground**. SenseFET source terminal on the primary side and internal control ground.
2	V_{CC}	**Positive Supply Voltage Input**. This pin is the positive supply input, which provides the internal operating current for startup and steady-state operation. This pin voltage is regulated to 10 V, without the external bias circuit, via internal switch *(see Figure 3)*. When the external bias voltage is higher than 10 V, it disables the internal high-voltage regulator and reduces power consumption. It is used to prevent the over voltage protection when V_{CC} exceeds 24.5 V.
3	I_{LIMIT}	**Peak Current Limit**. Adjusts the peak current limit of the SenseFET. The internal 50 µA current source is diverted to the parallel combination of an internal 46 kΩ (3R + R) resistors and any external resistor to GND on this pin to determine the peak current limit.
4	V_{FB}	**Feedback Voltage**. Inverting input of the transconductance amplifier. This pin controls converter output voltage by outputting a current proportional to the difference between the reference voltage and the output voltage divided by external resistors. It is triggered when Feedback voltage drops below 0.5 V for the Open Feedback Loop Protection (OFLP).
5	V_{COMP}	**Comp Voltage**. Output of the transconductance amplifier. The compensation networks are placed between the V_{COMP} and GND pins to achieve stability and good dynamic performance. V_{COMP} voltage used to prevent the over load protection when V_{COMP} voltage exceeds 3 V.
6,7	Drain	**Drain**. High-voltage power SenseFET drain connection. In addition, during startup and steady-state operation; the internal high-voltage current source supplies internal bias and charges the external capacitor connected to the V_{CC} pin. Once V_{CC} reaches 8 V, all internal blocks are activated. The internal high-voltage current source is enabled until V_{CC} reaches 10 V. After that, the internal high-voltage regulator turns on and off regularly to maintain V_{CC} at 10 V.

Downloaded from Arrow.com.

Absolute Maximum Ratings

Stresses exceeding the absolute maximum ratings may damage the device. The device may not function or be operable above the recommended operating conditions and stressing the parts to these levels is not recommended. In addition, extended exposure to stresses above the recommended operating conditions may affect device reliability. The absolute maximum ratings are stress ratings only. T_A = 25°C, unless otherwise specified.

Symbol	Parameter	Min.	Max.	Unit
V_{DS}	Drain Pin Voltage	-0.3	650.0	V
V_{CC}	Supply Voltage	-0.3	26.0	V
V_{COMP}	V_{COMP} Pin Voltage	-0.3	Internally Clamped Voltage(4)	V
V_{FB}	Feedback Voltage	-0.3	12.0	V
I_{LIMIT}	Current Limit Pin Voltage	-0.3	12.0	V
I_{DM}	Drain Current Pulsed(5)		2.8	A
E_{AS}	Single Pulsed Avalanche Energy(6)		10.5	mJ
P_D	Total Power Dissipation		1.25	W
T_J	Operating Junction Temperature(7)	-40	125	°C
	Maximum Junction Temperature		150	°C
T_{STG}	Storage Temperature	-55	150	°C

Notes:
4. V_{COMP} is clamped by internal clamping diode (11 V, I_{CLAMP_MAX} < 100 µA)
5. Repetitive rating: pulse width is limited by maximum junction temperature.
6. L=10 mH, starting T_J=25°C.
7. Although this parameter guarantees IC operation, it does not guarantee all electrical characteristics.

Thermal Impedance

T_A=25°C unless otherwise specified.

Symbol	Parameter	Value	Unit
θ_{JA}	Junction-to-Ambient Thermal Impedance(8)	100	°C/W

Note:
8. JEDEC recommended environment, JESD51-2, and test board, JESD51-3, with minimum land pattern.

ESD Capability

Symbol	Parameter	Value	Unit
ESD	Human Body Model, JESD22-A114(9)	4	kV
	Charged Device Model, JESD22-C101(9)	2	

Note:
9. Meets JEDEC standards JESD 22-A114 and JESD 22-C101.

Downloaded from Arrow.com.

Electrical Characteristics

T_A = 25°C unless otherwise specified.

Symbol	Parameter	Condition	Min.	Typ.	Max.	Unit
SenseFET Section						
BV_{DSS}	Drain Source Breakdown Voltage	V_{CC} = 0 V, I_D = 250 µA	650			V
I_{DSS}	Zero Gate Voltage Drain Current	V_{DS} = 520 V, T_A = 125°C			250	µA
$R_{DS(ON)}$	Drain-Source On-State Resistance	V_{GS} = 10 V, I_D = 0.3 A		20	30	Ω
C_{ISS}	Input Capacitances	V_{GS} = 0 V, V_{DS} = 25 V, f = 1 MHz		97		pF
C_{OSS}	Output Capacitance	V_{GS} = 0 V, V_{DS} = 25 V, f = 1 MHz		13.6		pF
C_{RSS}	Reverse Transfer Capacitance	V_{GS} = 0 V, V_{DS} = 25 V, f = 1 MHz		2.4		pF
t_r	Rise Time	V_{DD} = 325 V, I_D = 0.7 A		7.6		ns
t_f	Fall Time	V_{DD} = 325 V, I_D = 0.7 A		26.1		ns
Control Section						
f_{OSC}	Switching Frequency	V_{COMP} = 2.5 V	45	50	55	kHz
f_M	Frequency Modulation(10)	V_{COMP} = 2.5 V, Randomly		±3		kHz
$t_{on.max}$	Maximum Turn-On Time	V_{COMP} = 2.5 V	11.2	13.3	15.4	µs
V_{START}	UVLO Threshold Voltage	V_{COMP} = 0 V, V_{CC} Sweep	7.2	8.0	8.8	V
V_{STOP}		After Turn On	6.3	7.0	7.7	V
I_{PK}	Current Limit Source Current	V_{COMP} = 2.5 V	35	50	65	µA
t_{SS}	Soft-Start Time	V_{COMP} = 2.5 V	7	10	13	ms
Burst Mode Section						
V_{BURH}	Burst-mode HIGH Threshold Voltage	V_{CC} = 15 V, V_{COMP} Increase	0.67	0.75	0.83	V
V_{BURL}	Burst-mode LOW Threshold Voltage	V_{CC} = 15 V, V_{COMP} Decrease	0.59	0.69	0.76	V
HYS_{BUR}	Burst-mode Hysteresis			60		mV
Protection Section						
I_{LIM}	Peak Current Limit	V_{COMP} = 2.5 V, di/dt = 300 mA/µs,	0.27	0.30	0.33	A
t_{CLD}	Current Limit Delay(10)				200	ns
V_{OLP}	Overload Protection	V_{COMP} Increase	2.7	3.0	3.3	V
V_{AOCP}	Abnormal Over-Current Protection(10)	V_{COMP} = 2.5 V	0.8	1.0	1.2	V
t_{LEB}	Leading-Edge Blanking Time(10)			200		ns
V_{OFLP}	FB Open Loop Protection	V_{FB} Decrease	0.4	0.5	0.6	V
V_{OVP}	Over-Voltage Protection	V_{CC} Increase	23.0	24.5	26.0	V
TSD	Thermal Shutdown Temperature(10)		125	135	150	°C
HYS_{TSD}	TSD Hysteresis Temperature(10)			60		°C
t_{DELAY}	Overload Protection Delay(10)	V_{COMP} > 3 V		40		ms
$t_{RESTART}$	Restart Time After Protection(10)			650		ms

Downloaded from Arrow.com.

Electrical Characteristics

T_A = 25°C unless otherwise specified.

Symbol	Parameter	Condition	Min.	Typ.	Max.	Unit
Transconductance Amplifier Section						
G_m	Transconductance of Error Amplifier		190	240	290	µmho
V_{REF}	Voltage Feedback Reference		2.45	2.50	2.55	V
$I_{EA.SR}$	Output Sourcing Current	$V_{FB} = V_{REF} - 0.05$ V		-12		µA
$I_{EA.SK}$	Output Sink Current	$V_{FB} = V_{REF} + 0.05$ V		12		µA
High-Voltage Regulator Section						
V_{HVREG}	HV Regulator Voltage	V_{COMP} = 0 V, V_{DRAIN} = 40 V	9	10	11	V
Total Device Section						
I_{OP1}	Operating Supply Current (Control Part Only, without Switching)	0 V < V_{COMP} < V_{BURL}		0.25	0.35	mA
I_{OP2}	Operating Supply Current (While Switching)	V_{BURL} < V_{COMP} < V_{OLP}		0.8	1.3	mA
I_{CH}	Startup Charging Current	V_{CC} = 0 V, V_{DRAIN} > 40 V		6		mA
I_{START}	Startup Current	V_{CC} = Before V_{START}, V_{COMP} = 0 V		120	155	µA
V_{DRAIN}	Minimum Drain Supply Voltage	V_{CC} = V_{COMP} = 0 V, V_{DRAIN} Increase		35		V

Note:
10. Though guaranteed by design, they are not 100% tested in production.

Downloaded from Arrow.com.

Typical Performance Characteristics

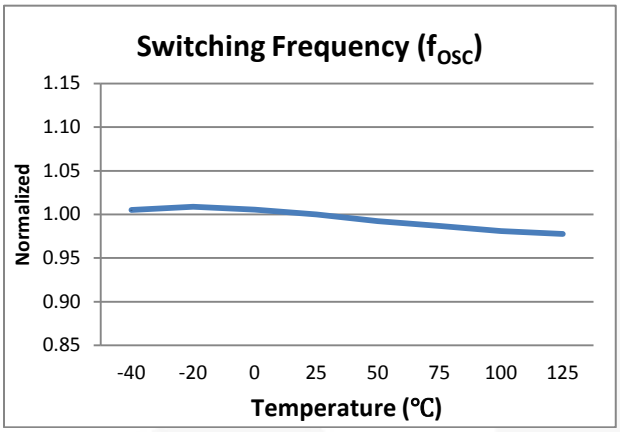

Figure 5. Operating Frequency vs. Temperature

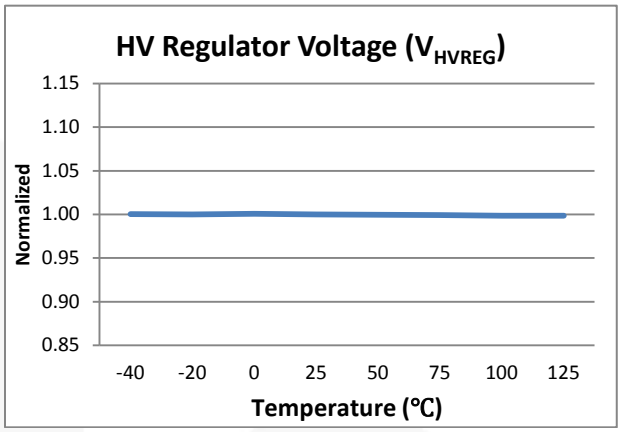

Figure 6. HV Regulator Voltage vs. Temperature

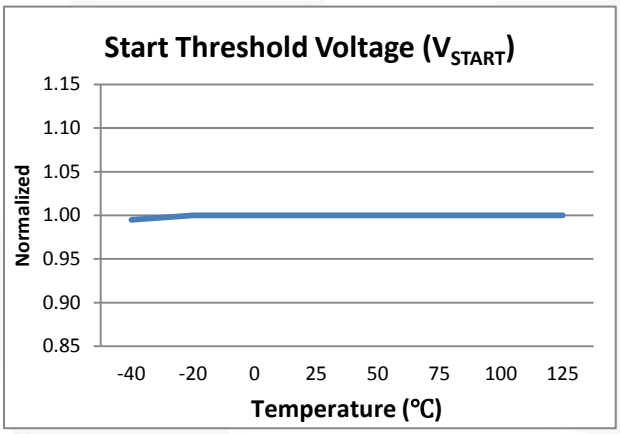

Figure 7. Start Threshold Voltage vs. Temperature

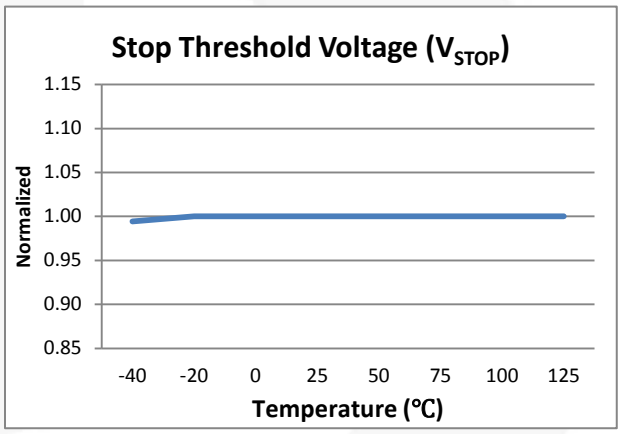

Figure 8. Stop Threshold Voltage vs. Temperature

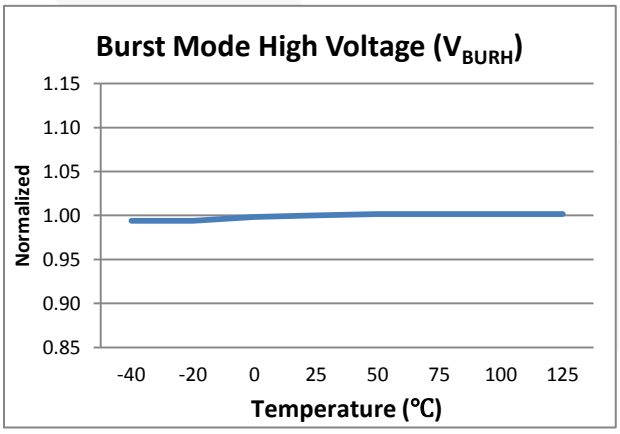

Figure 9. Burst Mode High Voltage vs. Temperature

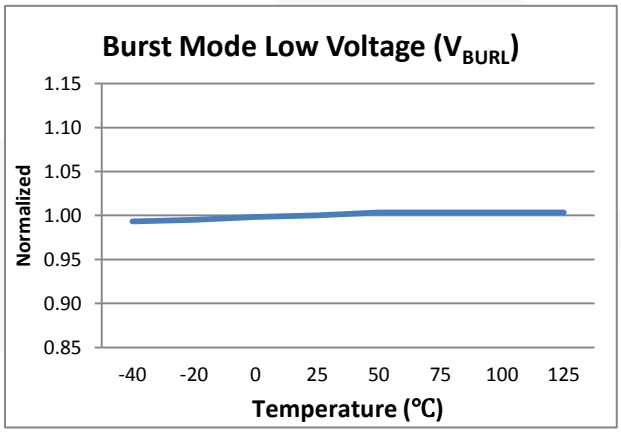

Figure 10. Burst Mode Low Voltage vs. Temperature

Downloaded from Arrow.com.

Typical Performance Characteristics (Continued)

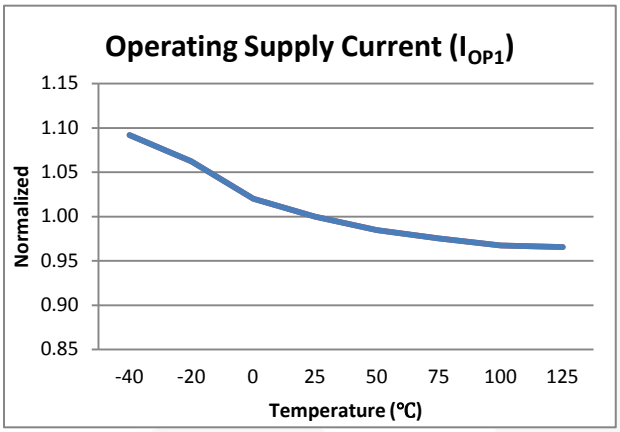

Figure 11. Operating Supply Current 1 vs. Temperature

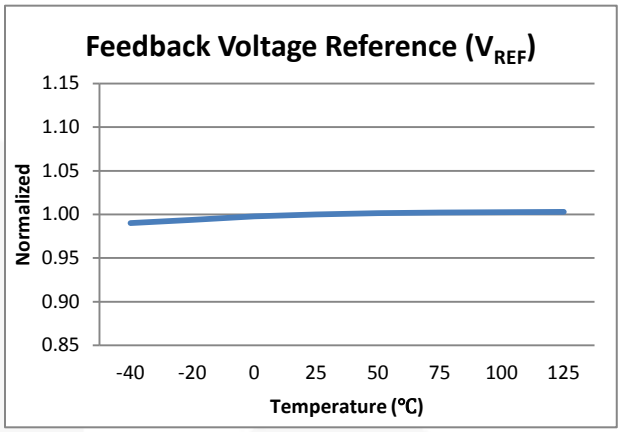

Figure 12. Feedback Voltage Reference vs. Temperature

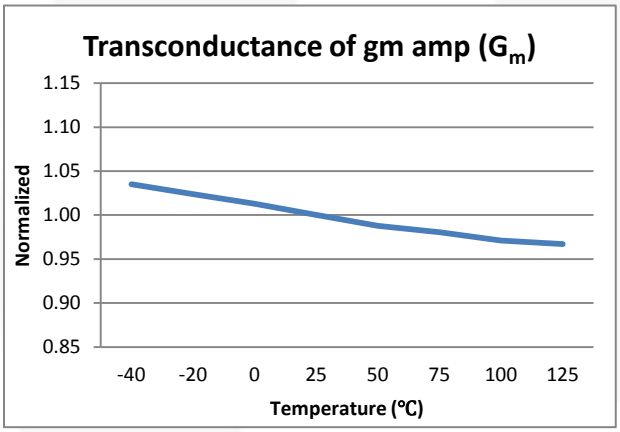

Figure 13. Transconductance of gm Amplifier vs. Temperature

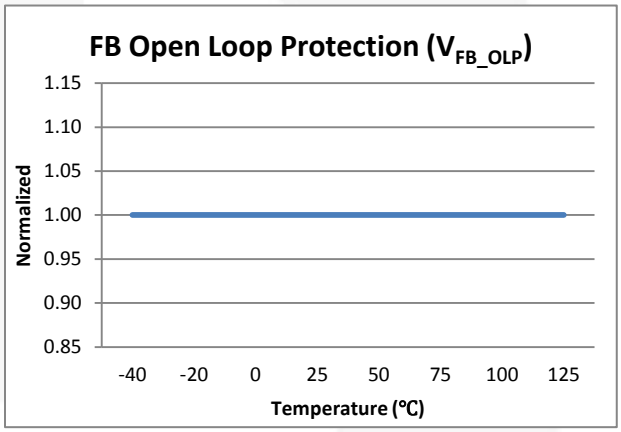

Figure 14. FB Open Loop Protection Voltage vs. Temperature

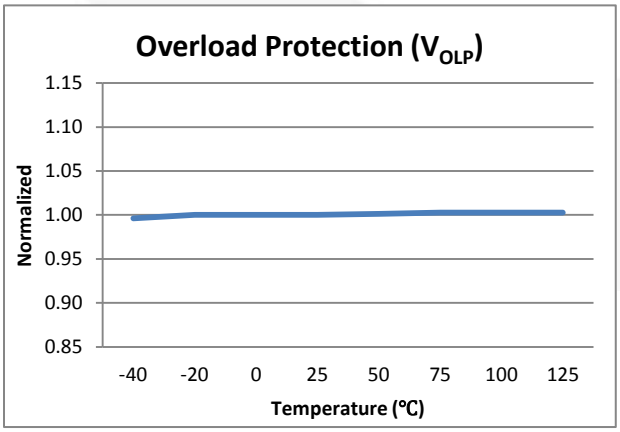

Figure 15. Overload Protection vs. Temperature

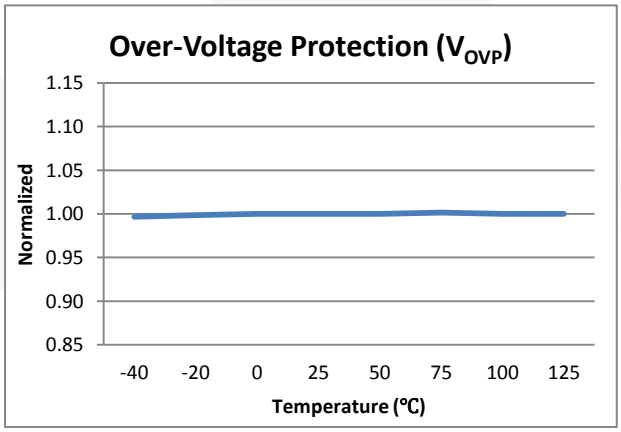

Figure 16. Over-Voltage Protection vs. Temperature

Downloaded from Arrow.com.

Functional Description

1. Startup and High-Voltage Regulator

During startup, an internal high-voltage current source (I_{CH}) of the high-voltage regulator supplies the internal bias current (I_{START}) and charges the external capacitor (C_A) connected to the V_{CC} pin, as illustrated in Figure 17. This internal high-voltage current source is enabled until V_{CC} reaches 10 V. During steady-state operation, this internal high-voltage regulator (HV_{REG}) maintains the V_{CC} with 10 V and provides operating current (I_{OP}) for all internal circuits. Therefore, FSL3276ALR needs no external bias circuit. The high-voltage regulator is disabled when the external bias is higher than 10 V.

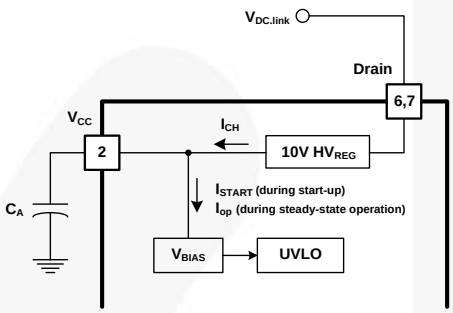

Figure 17. Startup and HV_{REG} Block

2. Oscillator Block

The oscillator frequency is set internally and the FSL3276ALR has a random frequency fluctuation function. Fluctuation of the switching frequency can reduce EMI by spreading the energy over a wider frequency range than the bandwidth measured by the EMI test equipment. The amount of EMI reduction is directly related to the range of the frequency variation. The range of frequency variation is fixed internally; however, its selection is randomly chosen by the combination of an external feedback voltage and an internal free-running oscillator. This randomly chosen switching frequency effectively spreads the EMI noise near switching frequency and allows the use of a cost-effective inductor instead of an AC input line filter to satisfy world-wide EMI requirements.

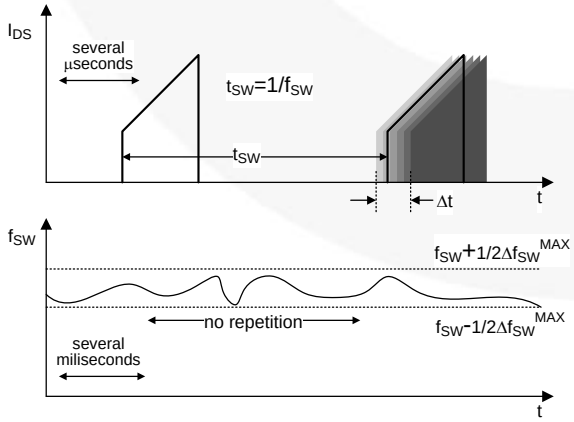

Figure 18. Frequency Fluctuation Waveform

3. Feedback Control

FSL3276ALR employs current-mode control with a transconductance amplifier for feedback control, as shown in Figure 19. Two resistors are typically used on the V_{FB} pin to sense output voltage. An external compensation circuit is recommended on the V_{COMP} pin to control output voltage. A built-in transconductance amplifier accurately controls output voltage without external components, such as Zener diode and transistor.

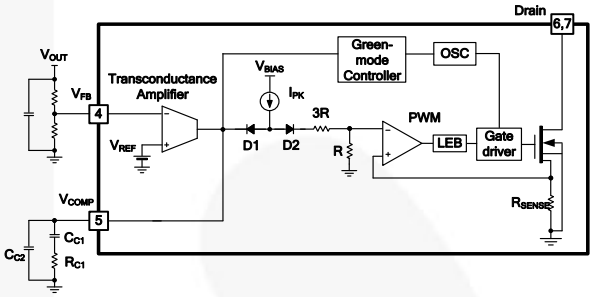

Figure 19. Pulse Width Modulation (PWM) Circuit

3.1 Transconductance Amplifier (gm Amplifier)

The output of the transconductance amplifier sources and sinks the current, respectively, to and from the compensation circuit connected on the V_{COMP} pin *(see* Figure 20*)*. This compensated V_{COMP} pin voltage controls the switching duty cycle by comparing with the voltage across the R_{SENSE}. When the feedback pin voltage exceeds the internal reference voltage (V_{REF}) of 2.5 V; the transconductance amplifier sinks the current from the compensation circuit, V_{COMP} is pulled down, and the duty cycle is reduced. This typically occurs when input voltage is increased or output load is decreased. A two-pole and one-zero compensation network is recommended for optimal output voltage control and AC dynamics. Typically 220 nF, 220 kΩ, and 330 pF are used for C_{C1}, R_{C1}, and C_{C2}, respectively.

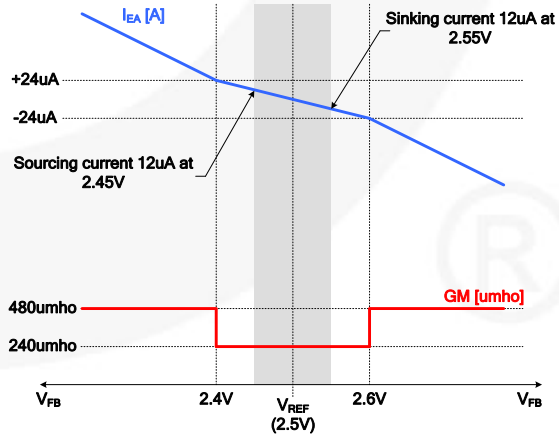

Figure 20. Characteristics of gm Amplifier

Downloaded from Arrow.com.

3.2 Pulse-by-pulse Current Limit

Because current-mode control is employed, the peak current flowing through the SenseFET is limited by the inverting input of PWM comparator, as shown in Figure 19. Assuming that 50 µA current source flows only through the internal resistors (3R + R = 46 kΩ), the cathode voltage of diode D2 is about 2.4 V. Since D1 is blocked when V_{COMP} exceeds 2.4 V, the maximum voltage of the cathode of D2 is clamped at this voltage. Therefore, the peak value of the current of the SenseFET is limited.

3.3 Leading Edge Blanking (LEB)

At the instant the internal SenseFET is turned on; primary-side capacitance and secondary-side rectifier diode reverse recovery of flyback application, the freewheeling diode reverse recovery, and other parasitic capacitance of buck application typically cause a high-current spike through the SenseFET. Excessive voltage across the sensing resistor (R_{SENSE}) leads to incorrect feedback operation in the current-mode control. To counter this effect, the FSL3276ALR has a Leading-Edge Blanking (LEB) circuit *(see Figure 19)*. This circuit inhibits the PWM comparator for a short time (t_{LEB}) after the SenseFET is turned on.

4. Protection Circuits

The protective functions include Overload Protection (OLP), Over-Voltage Protection (OVP), Under-Voltage Lockout (UVLO), Open Feedback Loop Protection (OFLP), Abnormal Over-Current Protection (AOCP), and Thermal Shutdown (TSD). All of the protections operate in Auto-Restart Mode. Since these protection circuits are fully integrated inside the IC without external components, reliability is improved without increasing cost and PCB space. If a fault condition occurs, switching is terminated and the SenseFET remains off. At the same time, internal protection timing control is activated to decrease power consumption and stress on passive and active components during Auto-Restart. When internal protection timing control is activated, V_{CC} is regulated with 10 V through the internal high-voltage regulator until switching is terminated. This internal protection timing control continues until restart time (650 ms) is counted. After counting to 650 ms, the internal high-voltage regulator is disabled and V_{CC} is decreased. When V_{CC} reaches the UVLO stop voltage V_{STOP} (7 V), the protection is reset and the internal high-voltage current source charges the V_{CC} capacitor via the drain pin again. When V_{CC} reaches the UVLO start voltage, V_{START} (8 V), the FSL3276ALR resumes normal operation. In this manner, Auto-Restart can alternately enable and disable the switching of the power SenseFET until the fault condition is eliminated.

4.1 Overload Protection (OLP)

Overload is defined as the load current exceeding a pre-set level due to an unexpected event. In this situation, the protection circuit should be activated to protect the SMPS. However, even when the SMPS operates normally, the OLP circuit can be enabled during the load transition or startup. To avoid this undesired operation, an internal fixed delay (40 ms) circuit determines whether it is a transient situation or a true overload situation *(see Figure 21)*. The current-mode feedback path limits the maximum power current and, when the output consumes more than this maximum power, the output voltage (V_O) decreases below its rated voltage. This reduces feedback pin voltage, which increases the output current of the internal transconductance amplifier. Eventually V_{COMP} is increased. When V_{COMP} reaches 3 V, the internal fixed OLP delay (40 ms) is activated. After this delay, the switching operation is terminated, as shown in Figure 22.

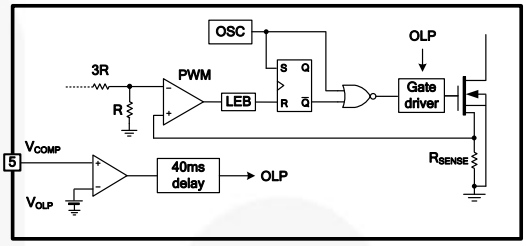

Figure 21. Overload Protection Internal Circuit

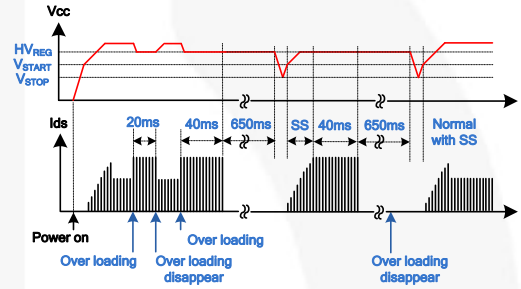

Figure 22. Overload Protection (OLP) Waveform

4.2 Abnormal Over-Current Protection (AOCP)

When output is shorted at high input voltage, much higher drain current peak than pulse-by-pulse current limit can flow through the SenseFET because turn on time is the same as the minimum turn-on time of FSL3276ALR. Even OLP is occasionally not enough to protect the FSL3276ALR in that abnormal case, since severe current stress is imposed on the SenseFET until OLP is triggered. FSL3276ALR includes the internal Abnormal Over-Current Protection (AOCP) circuit shown in Figure 23. The voltage across the R_{SENSE} is compared with a preset AOCP level (V_{AOCP}) after t_{LEB} and, if the voltage across the R_{SENSE} is greater than the AOCP level, the set signal is triggered after four switching times by an internal 2-bit counter, shutting down the SMPS, as shown in Figure 24. This LEB time can inhibit miss-triggering due to the leading-edge spike.

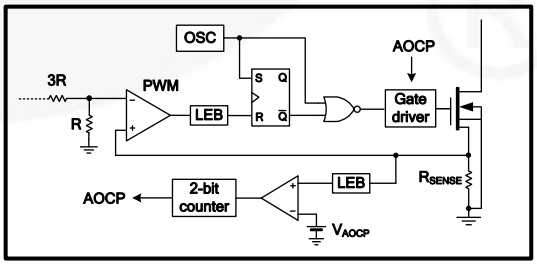

Figure 23. AOCP Circuit

Downloaded from Arrow.com.

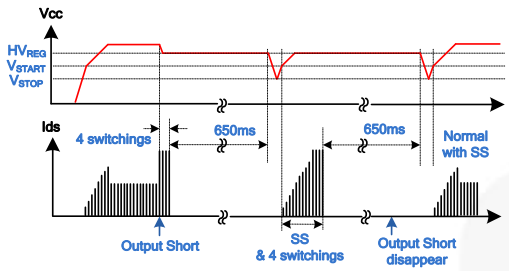

Figure 24. AOCP Waveform

4.3 Thermal Shutdown (TSD)

The SenseFET and control IC integrated on the same package makes it easier to detect the temperature of the SenseFET. When the junction temperature exceeds 135°C, thermal shutdown is activated. The FSL3276ALR is restarted after the temperature decreases to 60°C.

4.4 Over-Voltage Protection (OVP)

If any feedback loop components fail due to a soldering defect, V_{COMP} climbs up in manner similar to the overload situation, forcing the preset maximum current to be supplied to the SMPS until the OLP is triggered. In this case, excessive energy is provided to the output and the output voltage may exceed the rated voltage before the OLP is activated. To prevent this situation, an Over-Voltage Protection (OVP) circuit is employed. In general, output voltage can be monitored through V_{CC} and, when V_{CC} exceeds 24.5 V, OVP is triggered, resulting in termination of switching operation. To avoid undesired activation of OVP during normal operation, V_{CC} should be designed below 24.5 V *(see Figure 25)*.

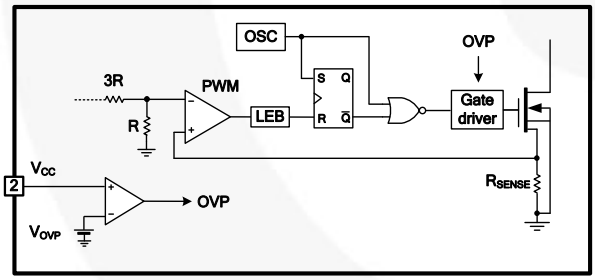

Figure 25. Over Voltage Protection Circuit

4.5 Open Feedback Loop Protection (OFLP)

In the event of a feedback loop failure, especially a shorted lower-side resistor of the feedback pin; not only does V_{COMP} rise in a similar manner to the overload situation, but V_{FB} starts to drop to IC ground level. Although OLP and OVP also can protect the SMPS in this situation, OFLP can reduce stress on SenseFET more. If there is no OFLP, output voltage is much higher than rated voltage before OLP or OVP trigger. When V_{FB} drops below 0.5 V, OFLP is activated, switching off. To avoid undesired activation during startup, this function is disabled during soft-start time.

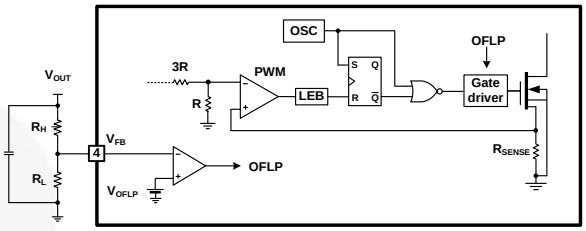

Figure 26. Open Feedback loop Protection Circuit

5. Soft-Start

The internal soft-start circuit slowly increases the SenseFET current after it starts. The typical soft-start time is 10 ms, as shown in Figure 27, where progressive increments of the SenseFET current are allowed during startup. The pulse width to the power switching device is progressively increased to establish the correct working conditions for transformers, inductors, and capacitors. The voltage on the output capacitors is gradually increased to smoothly establish the required output voltage. Soft-start also helps to prevent transformer saturation and reduces stress on the secondary diode.

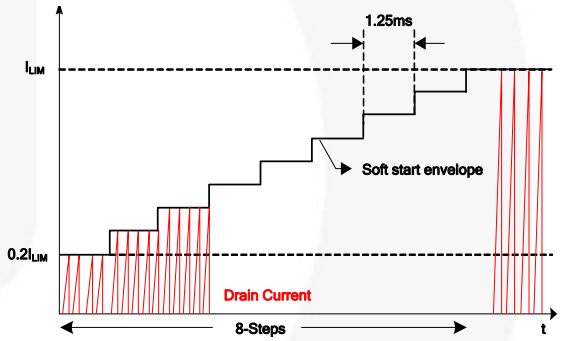

Figure 27. Internal Soft-Start

6. Burst Mode Operation

To minimize power dissipation in Standby Mode, the FSL3276ALR enters Burst Mode. As the load decreases, the comp voltage (V_{COMP}) decreases. As shown in Figure 28, the device automatically enters Burst Mode when the feedback voltage drops below V_{BURL}. At this point, switching stops and the output voltages start to drop at a rate dependent on the standby current load. This causes V_{COMP} to rise. Once it passes V_{BURH}, switching resumes. V_{COMP} then falls and the process repeats. Burst Mode alternately enables and disables switching of the SenseFET and reduces switching loss in Standby Mode.

Downloaded from Arrow.com.

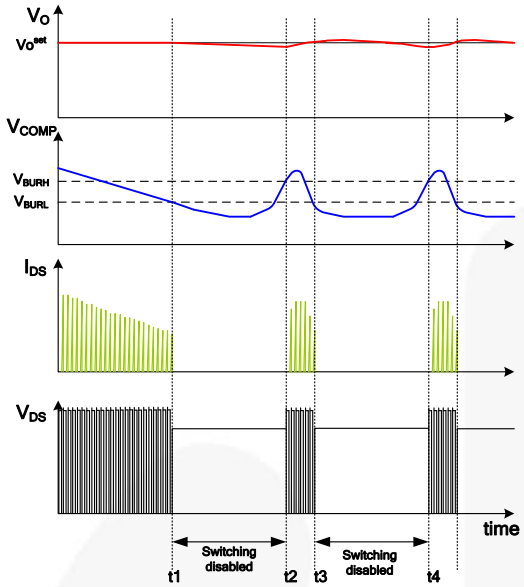

Figure 28. Burst Mode Operation

7. Green Mode Operation

As output load condition is reduced, the switching loss becomes the largest power loss factor. FSL3276ALR uses the V_{COMP} pin voltage to monitor output load condition. As output load decreases, V_{COMP} decreases and switching frequency declines. Once V_{COMP} drops to under 0.8 V, the switching frequency varies between 21 kHz and 23 kHz before Burst Mode operation, random frequency fluctuation still functions.

8. Adjusting Current Limit

As shown in Figure 29, the inverting input voltage of a PWM comparator that determines pulse-by-pulse current limit level is generated by the internal resistor R and current IPK with a maximum value of 50 µA. When the external resistor RX is connected between ILIMIT and GND, IPK current can be adjusted because the added Rx will be configured with internal resistor (3R+R) with total 46 kΩ in parallel and it will flow inversely proportional to RX value connected. For example, if no resistor is connected, pulse-by-pulse current limit for MOSFET switching current will be the maximum level (300 mA). On the other hand, the minimum level can be set down to 70 mA by the Rx value ~~that can be got from following~~ shown in equation (1). Figure 30 shows the adjusted current limit according to the RX.

$$300\ \text{mA} : 70\ \text{mA} = (46\ \text{k}\Omega + R_X) : R_X \qquad (1)$$

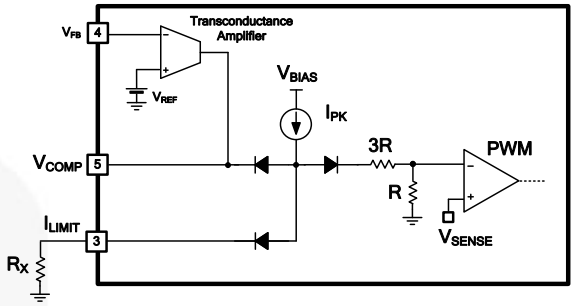

Figure 29. Current Limit Adjustment

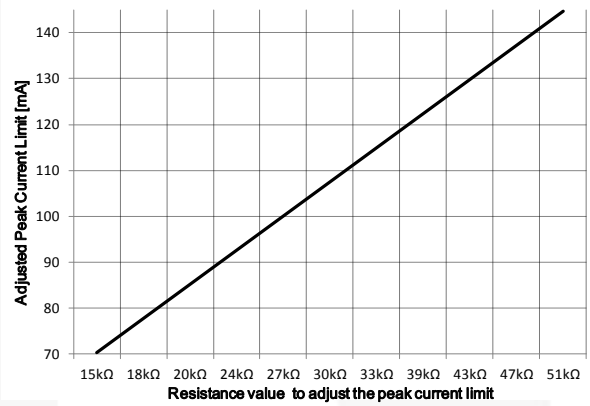

Figure 30. Current Limit vs. Rx

Downloaded from Arrow.com.

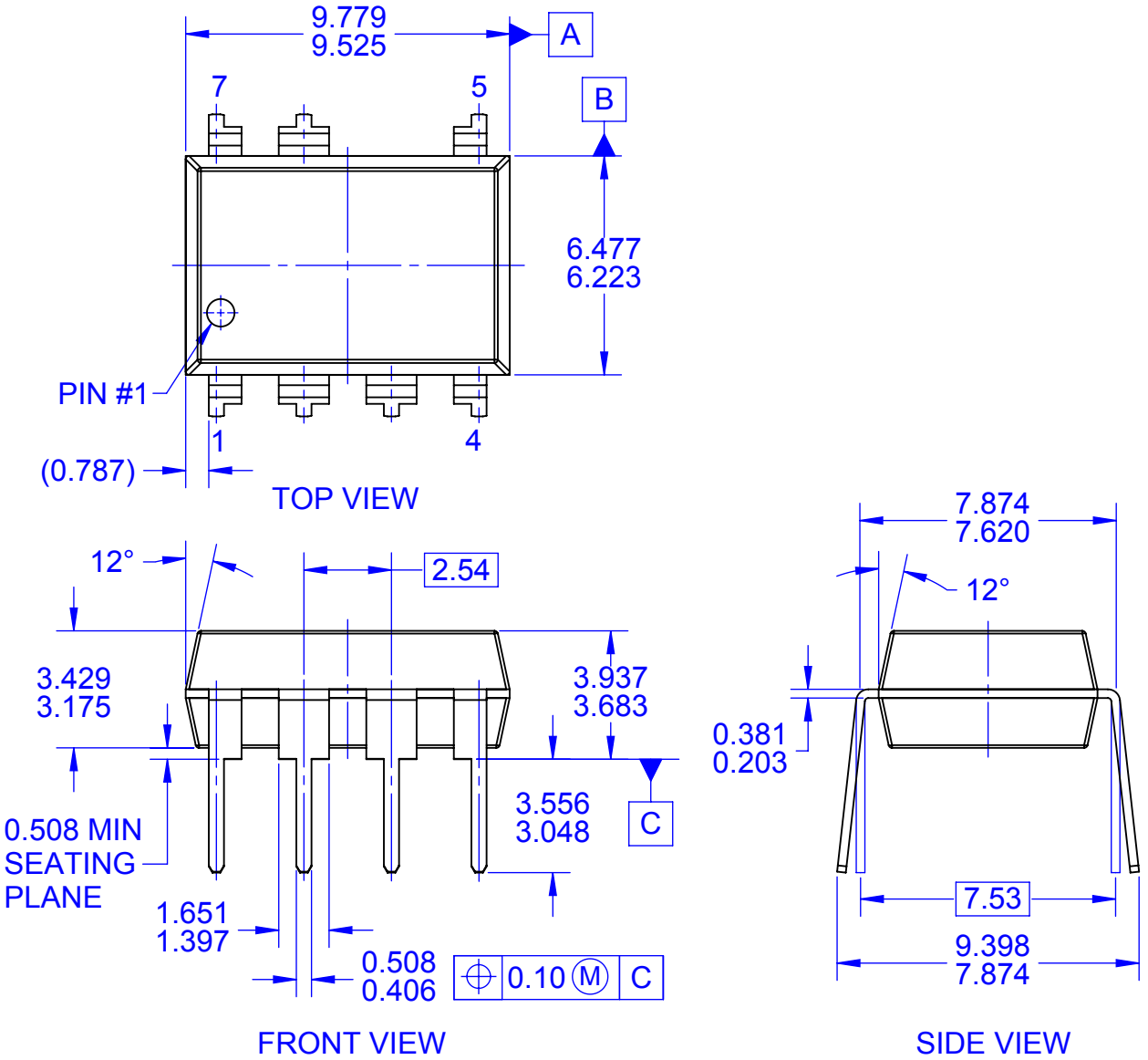

NOTES:

A. REFERENCE JEDEC MS-001, VARIATION BA
EXCEPT FOR NUMBER OF LEADS.
B. DIMENSIONS ARE IN MILLIMETERS
C. DIMENSIONS AND TOLERANCES PER
ASME Y14.5M, 2009
D. DIMENSIONS ARE EXCLUSIVE OF BURRS,
MOLD FLASH AND TIE BAR EXTRUSIONS.
E. DRAWING FILENAME: MKT-NA07Drev2

FAIRCHILD ™

Downloaded from Arrow.com.

ON Semiconductor and ON are trademarks of Semiconductor Components Industries, LLC dba ON Semiconductor or its subsidiaries in the United States and/or other countries. ON Semiconductor owns the rights to a number of patents, trademarks, copyrights, trade secrets, and other intellectual property. A listing of ON Semiconductor's product/patent coverage may be accessed at www.onsemi.com/site/pdf/Patent−Marking.pdf. ON Semiconductor reserves the right to make changes without further notice to any products herein. ON Semiconductor makes no warranty, representation or guarantee regarding the suitability of its products for any particular purpose, nor does ON Semiconductor assume any liability arising out of the application or use of any product or circuit, and specifically disclaims any and all liability, including without limitation special, consequential or incidental damages. Buyer is responsible for its products and applications using ON Semiconductor products, including compliance with all laws, regulations and safety requirements or standards, regardless of any support or applications information provided by ON Semiconductor. "Typical" parameters which may be provided in ON Semiconductor data sheets and/or specifications can and do vary in different applications and actual performance may vary over time. All operating parameters, including "Typicals" must be validated for each customer application by customer's technical experts. ON Semiconductor does not convey any license under its patent rights nor the rights of others. ON Semiconductor products are not designed, intended, or authorized for use as a critical component in life support systems or any FDA Class 3 medical devices or medical devices with a same or similar classification in a foreign jurisdiction or any devices intended for implantation in the human body. Should Buyer purchase or use ON Semiconductor products for any such unintended or unauthorized application, Buyer shall indemnify and hold ON Semiconductor and its officers, employees, subsidiaries, affiliates, and distributors harmless against all claims, costs, damages, and expenses, and reasonable attorney fees arising out of, directly or indirectly, any claim of personal injury or death associated with such unintended or unauthorized use, even if such claim alleges that ON Semiconductor was negligent regarding the design or manufacture of the part. ON Semiconductor is an Equal Opportunity/Affirmative Action Employer. This literature is subject to all applicable copyright laws and is not for resale in any manner.

PUBLICATION ORDERING INFORMATION

LITERATURE FULFILLMENT:
Literature Distribution Center for ON Semiconductor
19521 E. 32nd Pkwy, Aurora, Colorado 80011 USA
Phone: 303−675−2175 or 800−344−3860 Toll Free USA/Canada
Fax: 303−675−2176 or 800−344−3867 Toll Free USA/Canada
Email: orderlit@onsemi.com

N. American Technical Support: 800−282−9855 Toll Free USA/Canada
Europe, Middle East and Africa Technical Support:
Phone: 421 33 790 2910
Japan Customer Focus Center
Phone: 81−3−5817−1050

ON Semiconductor Website: **www.onsemi.com**

Order Literature: http://www.onsemi.com/orderlit

For additional information, please contact your local Sales Representative

Downloaded from Arrow.com.