New Product

CN-0360-A

FF01 Series

Low Profile E-Stop Switches with Ø 16mm Bodies

Short Behind Panel Depth: 13.6mm
Twist or Pull Release

Ø 25mm & 30mm Caps
IP65/IP67 Rated

2026-04-15 Rev
2026-04-01

NKK SWITCHES
Innovation Driving Quality

Downloaded from Arrow.com.

General Specifications

Electrical Capacity

Resistive Load:	0.5A @ 24V DC

Other Ratings

Rated Insulation Voltage:	36V DC
Impulse Withstand Voltage:	2.5kV
Contact Resistance:	50 milliohms maximum
Insulation Resistance:	100 megohms minimum @ 500V DC
Mechanical Life:	100,000 operations minimum
Electrical Life:	100,000 operations minimum
Operating Force:	Push to lock 10.8N; Pull to reset 8.5N; Turn to reset 0.13N·m
Minimum Direct Operating Force:	15N
Short Circuit Protection:	gG10A
Conditional Short Circuit Current:	1000A
Minimum Positive Opening Travel:	.118″ (3.0mm)
Total Travel:	.177″ (4.5mm)
Operation Frequency:	10 times per minute
Overvoltage Category:	II

Materials & Finishes

Actuator:	Glass fiber reinforced polyester (PBT)
Housing:	Glass fiber reinforced polyamide
Movable Contacts:	Silver alloy copper with gold plating
Stationary Contacts:	Silver alloy copper with gold plating
Terminals:	Brass with tin plating

Environmental Data

Operating Temperature Range:	–25°C through +60°C (–13°F through +140°F)
Storage Temperature Range:	–45°C through +80°C (–49°F through +176°F)
Humidity:	90 ~ 95% humidity for 240 hours @ +40°C (+104°F)
Vibration:	10 ~ 500Hz, amplitude 0.35mm. Acceleration 50m/s^2
Shock:	Durability: 1,000m/s^2; Malfunction: 150m/s^2
Pollution Degree:	3
Sealing:	Meets IP65/IP67 of IEC 60529 Standards at front panel

Installation

Mounting Torque:	785mN•m
Soldering Time & Temperature:	Manual Soldering: 390°C maximum for 4 seconds maximum, 2 cycles

Standards & Certifications

UL, C-UL (UL508)

EN 60947-5-1, EN 60947-5-5

TÜVRheinland CERTIFIED
Type Approved
Safety
Regular Production
Surveillance
www.tuv.com
ID 1419078444

Downloaded from Arrow.com.

Distinctive Characteristics

Low profile housing and one of the shortest behind panel depths in its class (.535"/13.6mm) facilitate high density panel layouts.

Two methods of resetting by pulling and/or twisting.

Achieves IP65/IP67 of IEC 60529 Standards (dust tight and protected against water jets from any direction, and protected against effects of temporary immersion in water), at front panel.

Unique sliding latch mechanism maintains the OFF state of the contacts, ensuring highest safety and reliability factors. Excellent shock and vibration resistant properties amidst chattering due to rugged vibration or impact.

Actuators in 25 and 30mm diameters enable space-conserving installation on panel.

Solder lug terminals.

Accessories available, including switch guard and nameplates (with or without legend), interchangeable with both 25mm and 30mm caps.

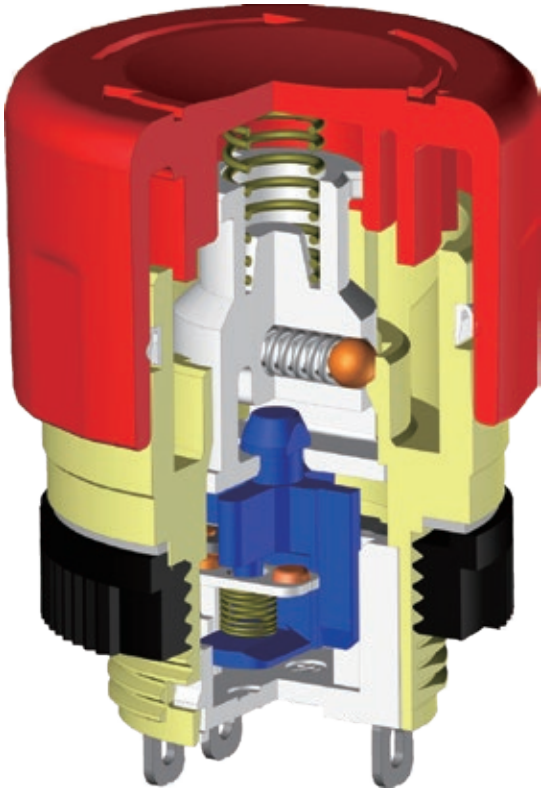

Applications

- Robotics and automation
- Operation controllers such as teach pendants
- Factory automation equipment
- Fluid dispensers
- Laser measurement device

Actual Size

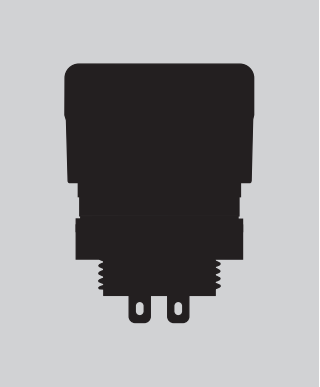

Downloaded from Arrow.com.

TYPICAL SWITCH ORDERING EXAMPLE

FF01 [2] [6] [B] [B] [C] [A] [E] [A01]

Poles

1	SPST
2	DPST

Contact Point

B	Normally Closed

Actuator Color

C	Red

Housing

E	Yellow

Circuits

6	Latchdown

Actuator Size

A	25.0mm Diameter
B	30.0mm Diameter

Actuator Legend

A	Arrows
E	No Legend

Contacts & Terminals

A01	Gold over Silver Rated 0.5A @ 24V DC Solder Lug Terminals

DESCRIPTION FOR TYPICAL ORDERING EXAMPLE

FF0126BBCAEA01

POLE & CIRCUITS

Pole	Model	Plunger Position		Connected Terminals		Throw & Switch Schematics
		Normal	Down	Normal	Down	Note: Terminal numbers are on the switch.
SP	**FF0116**	ON	OFF	11-12	OPEN	SPST NC
DP	**FF0126**	ON	OFF	11-12 21-22	OPEN	DPST NC 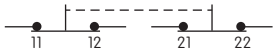

ACTUATOR SIZES, COLOR & LEGEND

Actuator Sizes:

- [A] **25.0mm (.984")**
- [B] **30.0mm (1.181")**

Actuator Color:

- [C] **Red**

Actuator Legend:

- [A] **Arrows**
- [E] **No Legend**

Material: Glass fiber reinforced PBT Finish: Matte

Actuators are not available separately.

Downloaded from Arrow.com.

HOUSING

E **Yellow**

Housing available in yellow with a matte finish.

CONTACT MATERIALS, RATINGS & TERMINALS

A01 **Gold over Silver**

Power Level
0.5A @ 24V DC

Solder Lug Terminals

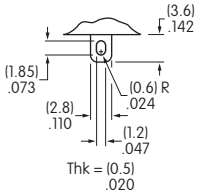

PANEL THICKNESS & CUTOUT

Panel Thickness

Recommended Panel Thickness:
.031″ ~ .177″
(0.8mm ~ 4.5mm)

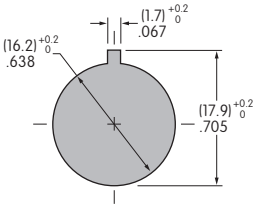

OPTIONAL ACCESSORIES

AT220
Protective Guard

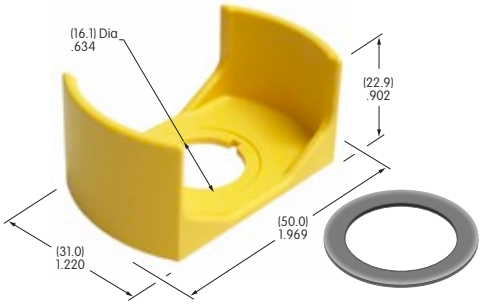

One o-ring provided with each protective guard

Materials & Colors:

Guard: Glass fiber reinforced polyamide
O-ring: Chloroprene rubber

Guard: Yellow
O-ring: Black

AT221
Nameplate without Legend

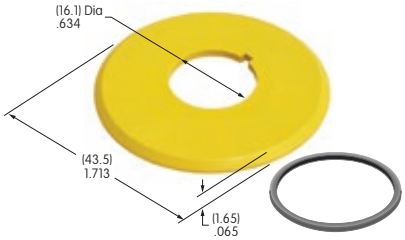

One o-ring provided with each nameplate

Materials & Colors:

Nameplate: Glass fiber reinforced polyamide
O-ring: Chloroprene rubber

Nameplate: Yellow
O-ring: Black

AT222
Nameplate with Emergency Stop Legend

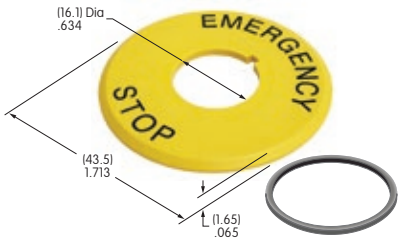

One o-ring provided with each nameplate

Materials & Colors:

Nameplate: Glass fiber reinforced polyamide
O-ring: Chloroprene rubber

Nameplate: Yellow with black letters
O-ring: Black

Panel Thickness & Cutout for Protective Guard or Nameplates

Recommended Panel Thickness:
.020″ ~ .118″
(0.5mm ~ 3.0mm)

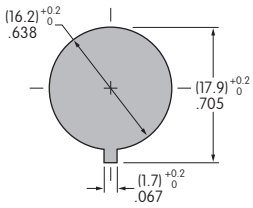

AT119
Socket Wrench

Material:

Brass with nickel plating

Use to tighten switch nut in installation

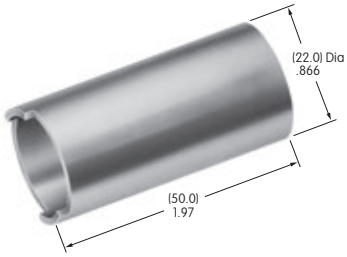

Downloaded from Arrow.com.

TYPICAL SWITCH DIMENSIONS

25.0mm Cap With or Without Actuator Legend • SPST

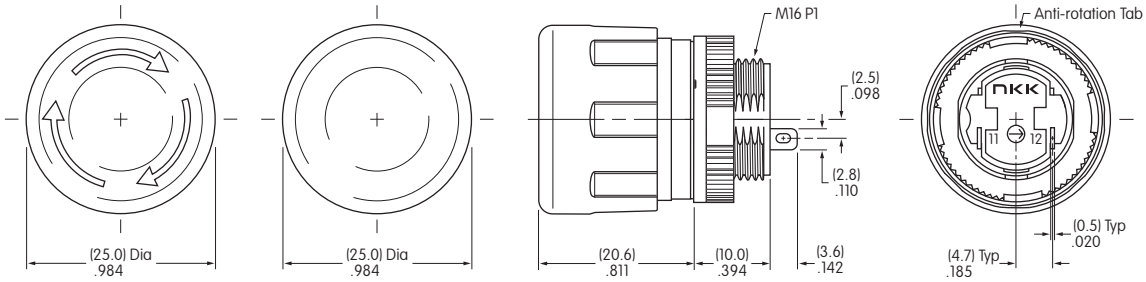

FF0116BACAEA01

25.0mm Cap With or Without Actuator Legend • DPST

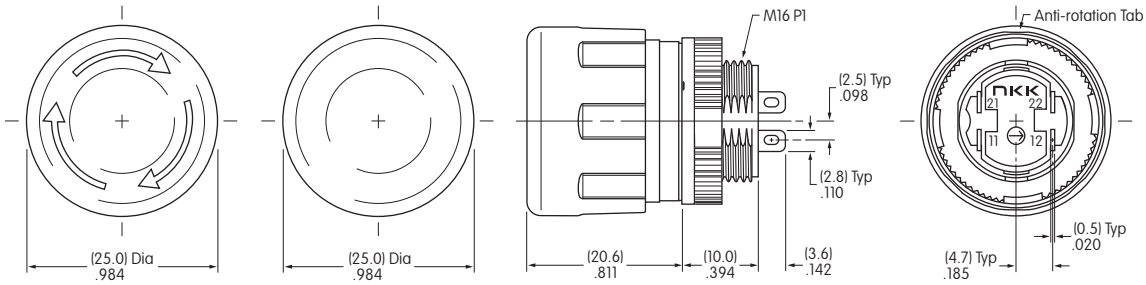

FF0126BACEEA01

30.0mm Cap With or Without Actuator Legend • SPST

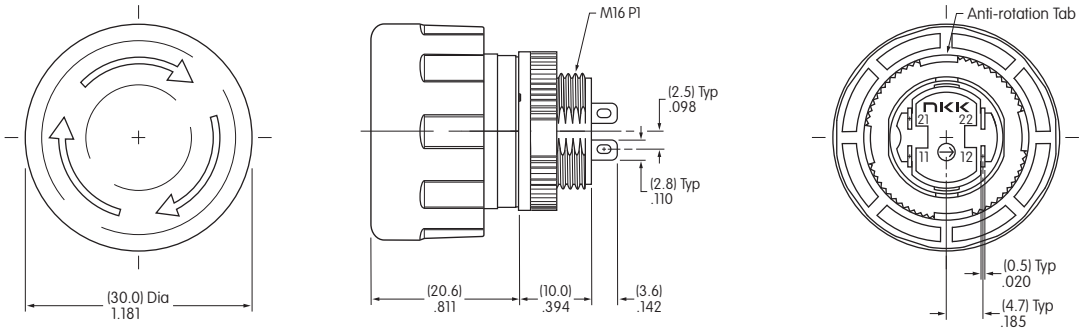

FF0116BBCAEA01

30.0mm Cap With or Without Actuator Legend • DPST

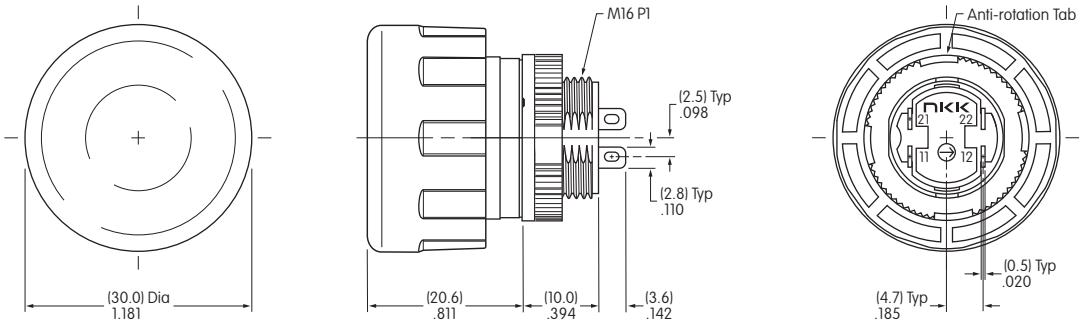

FF0126BBCEEA01

Downloaded from Arrow.com.

SAFETY PRECAUTIONS & INSTALLATION INSTRUCTIONS

Installation of Switch & AT220 Protective Guard

* The protective guard complies with international standards. Read carefully to ensure the product will be used properly.

Safety Precautions

- The protective guard is made exclusively for use with NKK's FF01 Series and should not be used with other types of products.
- Read the FF01 Series Instruction Manual before switch installation, cable connection, operation, maintenance or inspection.
- Confirm power is off before installation, cable connection, maintenance, etc.
- When installing product on other equipment, be sure usage is in compliance with standards and regulations of your country or region, as required for your system, equipment or facility.

Installation of Switch & Guard into Panel

1. Remove the nut from the switch body.
2. Insert the switch body into the protective guard from the front of the guard, aligning notch on the o-ring with the anti-rotation tab on the switch body. Align the anti-rotation tab on the switch body with the keyway on the guard.
3. Align the anti-rotation tab on the back of guard with the anti-rotation keyway on the panel.
4. Using the AT119 Socket Wrench, tighten the nut from the back of the panel (recommended torque 785mN•m).

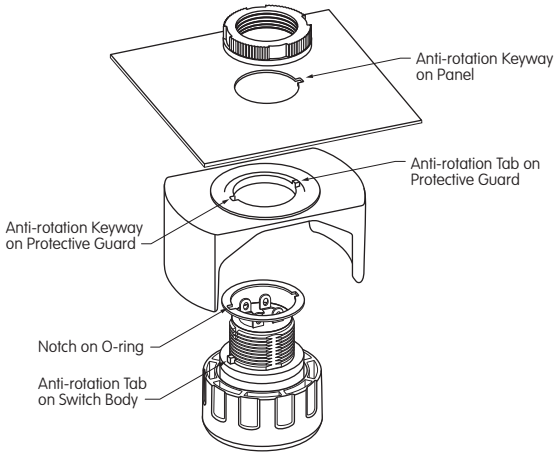

Installation Height

- To install the switch with the protective guard onto semiconductor manufacturing equipment, the mounting height range should be 33.0 inches to 64.5 inches (838mm to 1,638mm). The maximum horizontal reach should be between 7.0 inches and 10.0 inches (178mm to 254mm) (SEMI S8).
- The switch must be installed within 118.0 inches (3.0 meters) from the working position (SEMI S2).
- To install the switch with the protective guard on equipment such as machine tools or processing equipment, the recommended height range is between 23.5 and 67.0 inches (600mm and 1,700mm) from the floor or platform level (ISO 13850).

  Note: To confirm that the switch and protective guard mounted on a device are ISO compliant, see requirements of ISO 13850.

* To comply with the SEMI Standard, it is necessary that "EMO" (Emergency Off) is printed on the switch or on the inside of the protective guard. Contact NKK Switches for more information.

Height		Horizontal Reach (Maximum)	
Inches	Millimeters	Inches	Millimeters
64.5	1,638	10.0	254
60.0	1,524	14.5	368
56.0	1,422	17.0	432
52.0	1,321	18.5	470
48.0	1,219	19.0	483
44.0	1,118	18.5	470
40.0	1,016	15.5	394
36.0	914	11.5	292
33.0	838	7.0	178

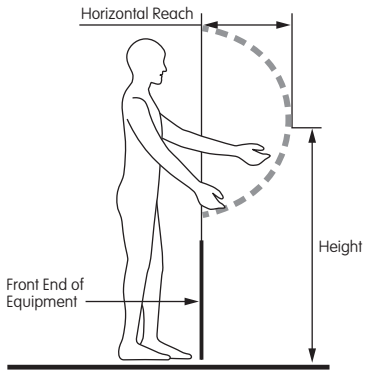

The table and illustration show the mounting range for the assembled emergency stop switch and protective guard. The height and horizontal reach are determined according to SEMI S8.

Downloaded from Arrow.com.

SAFETY PRECAUTIONS & INSTALLATION INSTRUCTIONS

Installation of Switch

Safety Precautions

- Read the FF01 Series Instruction Manual before switch installation, cable connection, operation, maintenance or inspection.
- Confirm power is off before installation, cable connection, maintenance, etc.
- When installing product on other equipment, be sure usage is in compliance with standards and regulations of your country or region, as required for your system, equipment or facility.
- Use the switch at the voltage and current recommendations in the specifications. Exceeding these may cause overheating.
- Use wiring with the appropriate rating.
- Follow recommended panel cutout dimensions and mounting instructions or switch may not operate properly.
- Remove dirt and dust from switch mounting surface of the panel before beginning installation.
- Do not disassemble the product, as it may cause malfunction, electric shock or fire.
- Operate switch by hand only; do not operate using foot, tool or other object.
- Bouncing may occur during a reset operation (pull or turn to reset). If switch-mounted equipment is subjected to shock or vibration, it may cause chattering. Take appropriate measures to prevent bouncing and chattering on the equipment side.
- Do not drop the switch or apply excessive shock or vibration. Deformation or damage may cause malfunction or performance degradation.
- After inserting the lead wire into the terminal hole, use a soldering iron to ensure a secure connection.
- If soldering is executed with terminals facing up, avoid allowing the flux to enter the interior of the switch.
- Soldering temperature is 390°C maximum within four seconds.

Usage Environment

- IP65/IP67 of IEC 60529 Standards at front panel.
- If the switch becomes wet, wipe off with a dry cloth. Using a switch exposed to water may result in water entering inside. If the water freezes inside the switch, it may not function properly.
- In an environment where dust and dirt may accumulate, remove deposits around switch before use. When necessary, a cloth dampened with a small amount of neutral detergent may be used. Follow using a dry cloth.

Installation of Switch into Panel

1. Remove the nut from the switch body.
2. Insert the switch body into the panel, aligning notch on the o-ring with the anti-rotation tab on the switch body. Align the anti-rotation tab on the switch body with the anti-rotation keyway on the panel.
3. Using the AT119 Socket Wrench, tighten the nut from back of panel (recommended torque 785mN•m).

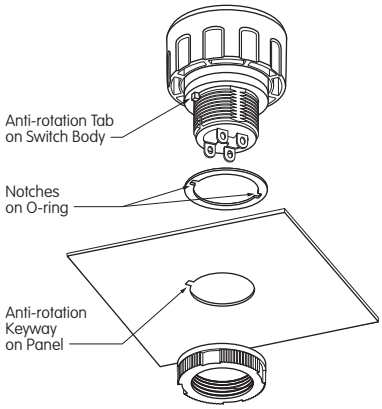

Effective Date April 2026

NKK SWITCHES
www.nkkswitches.com • 1.877.2BUYNKK (228.9655)
7850 East Gelding Drive • Scottsdale, AZ 85260 • Telephone 480.991.0942 • Fax 480.998.1435

Downloaded from Arrow.com.