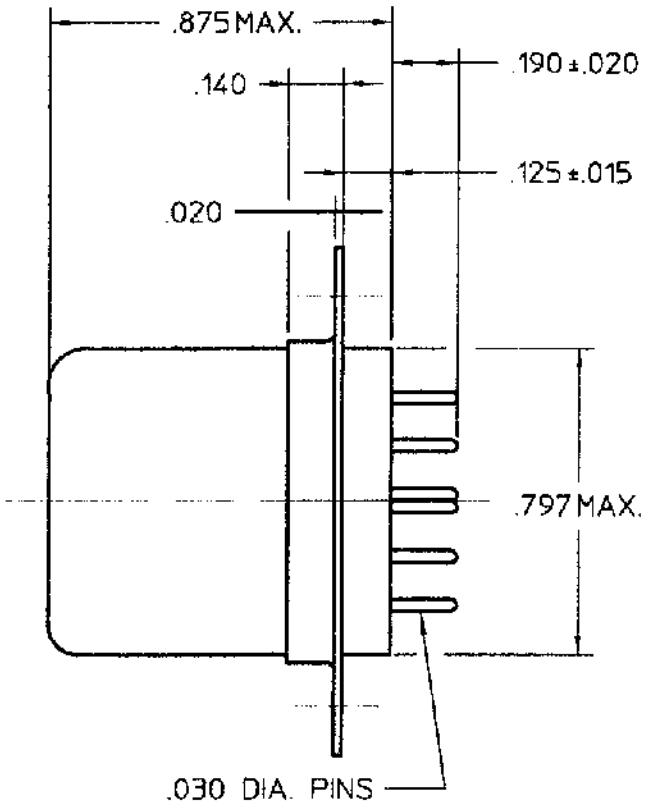

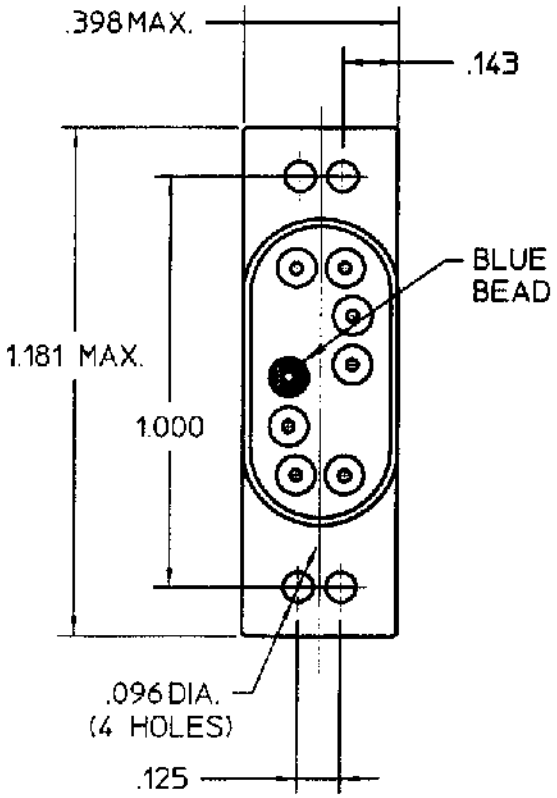

REV. 0

DCO 170284

COIL: @ 25°C

RESISTANCE 552 OHMS ±10%

NOMINAL VOLTAGE 20.0 - 29.5 VDC

MUST OPERATE 13.5 VDC

MUST RELEASE 7.0 VDC MAX., 1.5 VDC MIN.

ENVIRONMENT:

VIBRATION 55 CPS TO 2000 CPS @ 15 g's

SHOCK 50 g's 11 MS. DURATION

TEMPERATURE -65 °C TO +125 °C

NOTES: OPERATE 6 MS MAX.

RELEASE 5 MS MAX.

DIELECTRIC 1000 VAC, BOUNCE 2.5 MS MAX.

CUSTOMER DATA SHEET

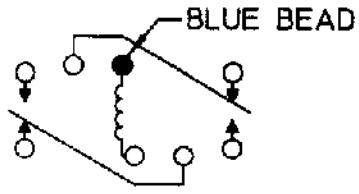

TERMINAL VIEW

CONTACT RATING:

2 AMPS @ 28 VDC, 100,000 OPERATIONS

DR. B.D. 10/5/00 CK. TLG 10-9-00

CII Technologies™

advanced control electronic solutions

CUST CII STD.

CUST. NO. REV.

3SAE RELAY

3SAE5014K1

SUPERSEDED
NOT the LATEST
REVISION

Downloaded from Arrow.com.