We connect and protect

Plug-In Unit Front Panel, Unshielded, for Static Trapezoid Handle, 3 U, 8 HP, 2.5 mm, Al, Front Anodized, Rear Conductive

CATALOG NUMBER

30847-607

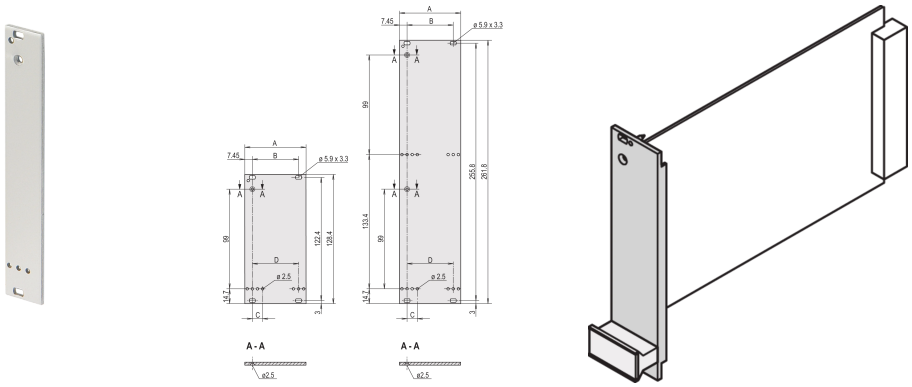

The front panel enables the assembly of a plastic or Alu-profile static trapezoid handle. The front panel cannot be shielded with a textile gasket.

CERTIFICATIONS

RoHS COMPLIANT

FEATURES

Front panel, unshielded

Front panel, Al, 2.5 mm, front anodized, conductive

PRODUCT ATTRIBUTES

Rack Height: 3U

Rack Width: 8HP

Package Quantity: 1

Accessory Type: Front panel

Downloaded from Arrow.com.

Handle Type: Trapezoid, Static; Aluminum Profile

Mounting: Screw-on Front

Front Finish: Anodized

Rear Finish: Conductive

Treated Edges: No

Complies With: IEC 60297-3-101

EMC Shielding: No

Finish: Anodized; Passivated

Material: Aluminum

Product Type: Front Panel

Type: Front Panel for Handle (PIU)

Gross Weight: 0.034kg

DIAGRAMS

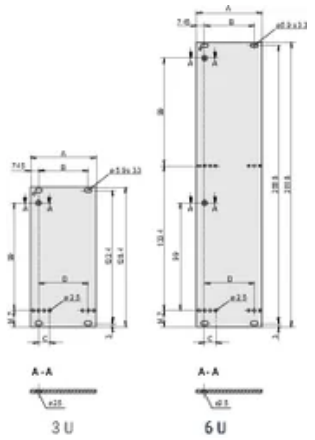

WARNING

nVent products shall be installed and used only as indicated in nVent's product instruction sheets and training materials. Instruction sheets are available at www.nvent.com and from your nVent customer service representative. Improper installation, misuse, misapplication or other failure to completely follow nVent's instructions and warnings may cause product malfunction, property damage, serious bodily injury and death and/or void your warranty.

Downloaded from Arrow.com.

North America
All locations
+1.763.422.2661
Chat with us:
nvent.com/schroff

Europe
Straubenhardt, Germany
+49.7082.794.0
Betschdorf, France
+33.3.88.90.64.90
Warsaw, Poland
+48.22.209.98.35
Assago, Italy
+39.02.932.7141
Chat with us:
nvent.com/schroff

Asia
Shanghai, China
+86.21.2412.6943
Qingdao, China
+86.532.8771.6101
Singapore
+65.6768.5800
Shin-Yokohama, Japan
+81.45.476.0271
Chat with us:
nvent.com/schroff

Middle East & India
Dubai, United Arab Emirates
+971.4.378.1700
Bangalore, India
+91.80.6715.2001
Istanbul, Turkey
+90.216.250.7374
Chat with us:
nvent.com/schroff

nVent-logo

Our powerful portfolio of brands:

CADDY ERICO HOFFMAN ILSCO SCHROFF TRACHTE

©2026 nVent. All nVent marks and logos are owned or licensed by nVent Services GmbH or its affiliates. All other trademarks are the property of their respective owners. nVent reserves the right to change specifications without notice.

This document is system-generated.

Downloaded from Arrow.com.