GLEASON REEL CORP.

Entertainment Industry Products

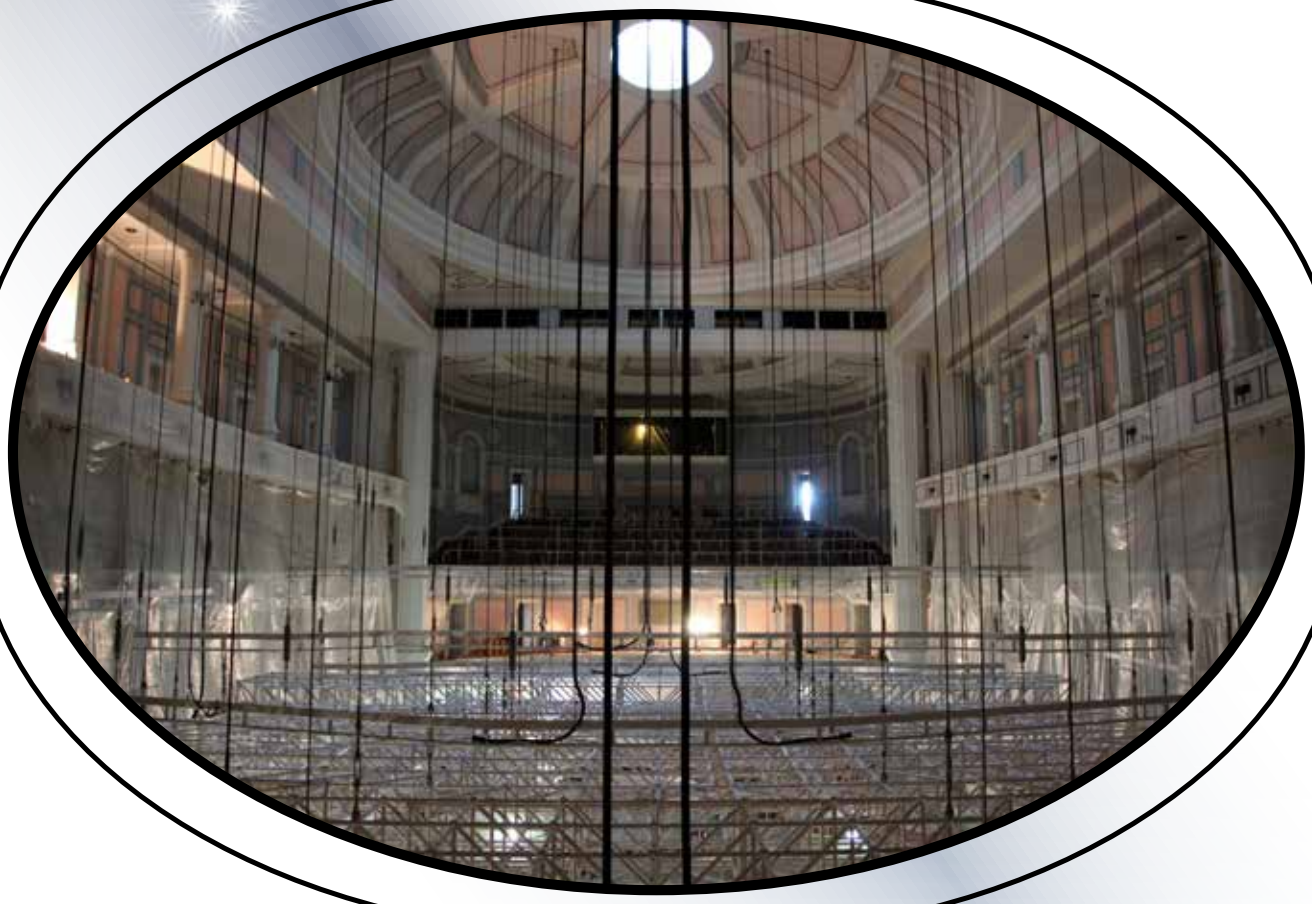

Powering your **Audio, Video & Lighting** Needs

Cable Management Systems

Stage & Set **Electrification**

Gleason® Reel

HUBBELL A HUBBELL COMPANY

Downloaded from Arrow.com.

Table of Contents

Stage and Screen Set Design Products

Contents: Page

Spring Driven Cable Reels ..... 3 - 5

Power, Control, DMX and CAT5 Cable Reels with and without Sliprings

Motor Driven Cable Reels ..... 6 - 8

Random Wrap, Monospiral and Level-Wind Reels equipped with AC/DC Motor or Springs

Combination Reels 9

Rotary Limit Switches 10

Twist Lock Plugs 11

Cable Carriers 12

Downloaded from Arrow.com.

Series 'WB' Cable Reels - Without Slip Rings

Gleason Series 'WB' (Without Brushes) Cable Reels are continuous contact reels designed for applications where any impedance must be avoided. Because WB-Reels use one continuous length of cable, there is no break from current source to consumer and that means complete preservation of transmission integrity. Models available for 30' to 120' of cable.

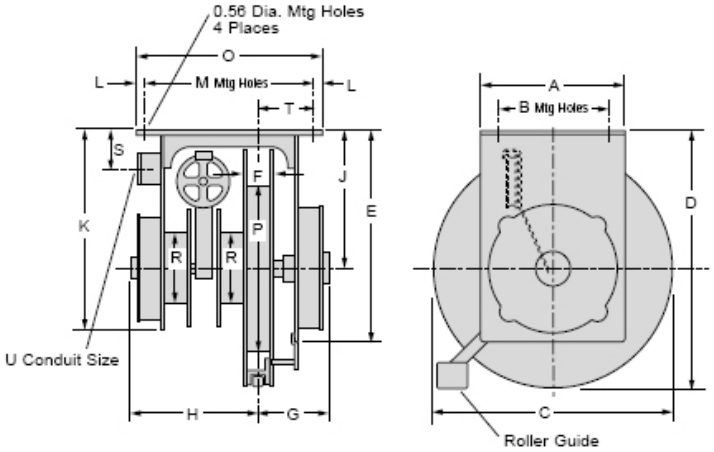

MODEL	A	B	C	D	E	F	G	H	J	K	L	M	N	O	P	R	S	T	U
WB-60-25	12.00	9.00	20.00	21.69	17.69	2.00	5.88	10.50	11.69	16.69	0.75	13.88	0.75	15.37	14.00	6.00	3.25	4.75	0.50
WB-75-25	12.00	9.00	27.00	28.69	20.75	2.00	6.81	10.75	15.19	19.69	0.75	13.88	0.75	15.37	22.00	6.00	6.69	4.63	0.50

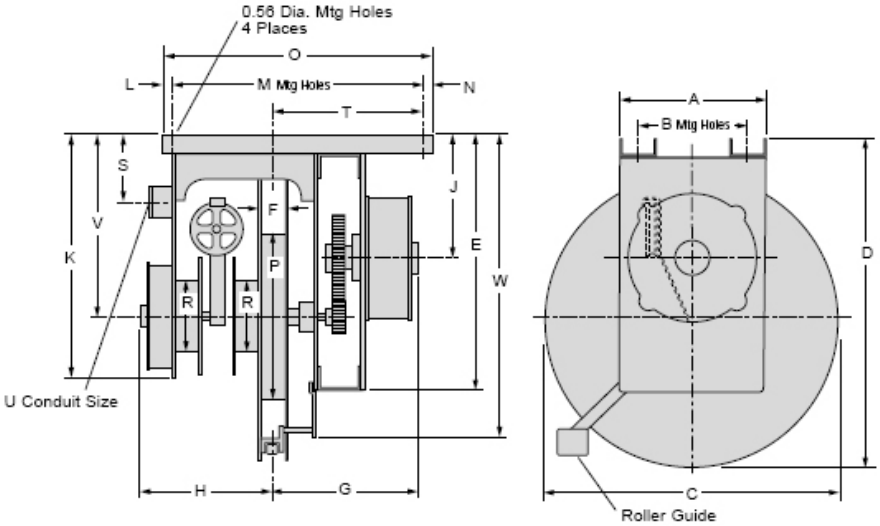

MODEL	A	B	C	D	E	F	G	H	J	K	L	M	N	O	P	R	S	T	U	V	W
WB-100-60	12.00	9.00	24.00	27.19	18.19	2.00	11.75	10.50	10.19	21.56	0.75	20.75	1.50	23.00	14.00	6.00	4.19	11.44	0.75	15.19	21.69
WB-100-100-60	12.00	9.00	28.00	31.19	20.19	2.00	16.00	10.75	12.19	23.56	0.75	20.75	1.50	23.00	16.00	6.00	6.00	11.44	0.75	17.19	23.69

Downloaded from Arrow.com.

Cable Reels

Series 'CM' Cable-Master Reels

Gleason Cable-Master Reels are ruggedly built and their design has been refined over many years of field use. These reels have either fully automatic or ratchet controlled spring rewind. Standard features include: rollered cable guide, ratchet lock and 600 volt slip ring. Available for 3 to 12 conductors, 20' to 70' travel. Data cable available.

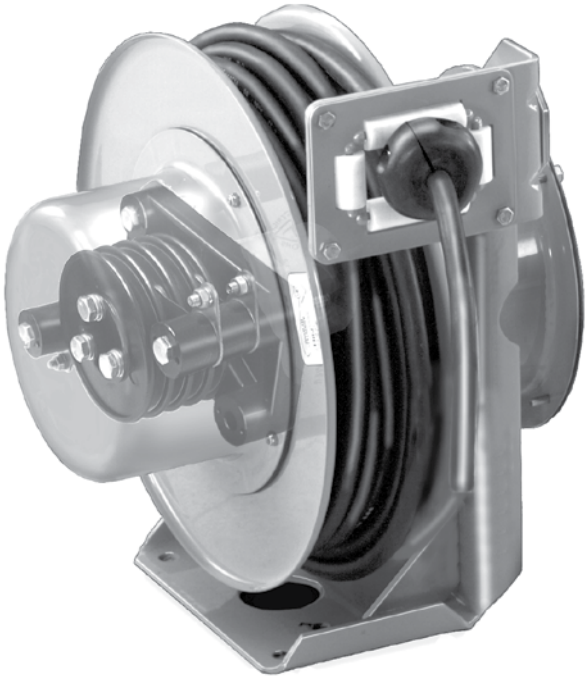

C14 Cable-Master

Dimensions A & B

Slip Ring Enclosure–C14 Reels

WIRE SIZE CODE*	SLIP RING POLES**	A	B
A, B, C, D	1 - 4	4.50 (114)	5.69 (145)
A, B, C, D	5 - 8	6.00 (152)	7.19 (183)
A, B, C, D	9 - 12	7.50 (191)	8.69 (221)
E, F	1 - 4	6.00 (152)	7.19 (183)

Reel Weight

Less Cable

REEL MODEL	WEIGHT lbs	(kg)
C14 - A	40	(18)
C14 - B	42	(19)
C14 - C	47	(21)

Example:
C14 - A03 - C 1103

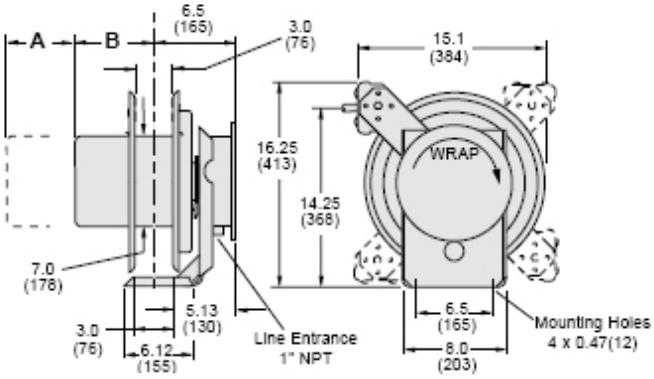

C16 Cable-Master

Dimensions A & B

Slip Ring Enclosure–C16 Reels

WIRE SIZE CODE*	SLIP RING POLES**	A	B
A, B, C, D	1 - 4	4.50 (114)	5.94 (151)
A, B, C, D	5 - 8	6.00 (152)	7.44 (189)
A, B, C, D	9 - 12	7.50 (191)	8.94 (227)
E, F	1 - 4	6.00 (152)	7.44 (189)

Reel Weight

Less Cable

REEL MODEL	WEIGHT lbs	(kg)
C16 - D	78	(35)
C16 - E	59	(27)
C16 - G	65	(29)
C16 - H	68	(31)
C16 - J	75	(34)
C16 - K	75	(34)

Example:
C16 - A03 - J 1105

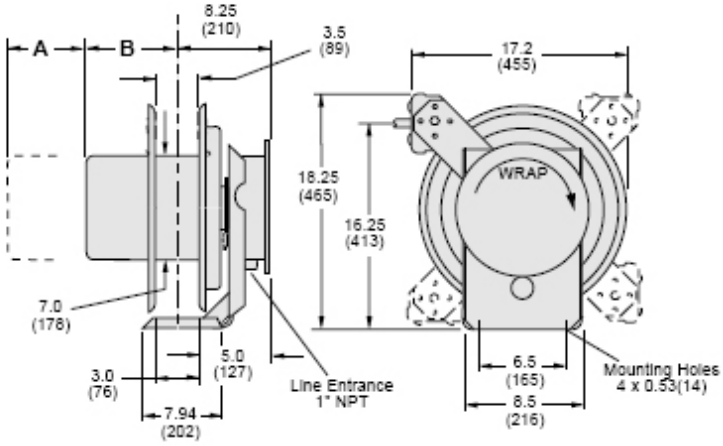

Downloaded from Arrow.com.

Cable Reels

Series 'S' Spring-Driven Electric Cable Reels

Gleason Series 'S' Spring-Driven Electric Cable Reels are one of our most popular designs in the theatre industry. Electric current flows from your power source to the current consumer through the cable you specify.

S-Reels utilize self-contained Slip Ring assemblies which transfer current to the cable mounted on the rotating spool. Models are available for 2 to 36 conductors, 30' to 120' for lift, drag and stretch applications (200' for retrieve applications).

Downloaded from Arrow.com.

Series 'SHO' Monospiral Reels

Monospiral cable reels are designed to stack cable in a single, multiple-layer vertical configuration. SHO Series Reels are designed to provide a low cost solution for long electrical cable travel. In the SHO series reels, winding torque is provided by one or more parallel design spring motors. Gleason SHO Reels have retrieve capacities of 350 feet of electric cable at a velocity of 150 ft./min and acceleration of 1.0 ft./sec.

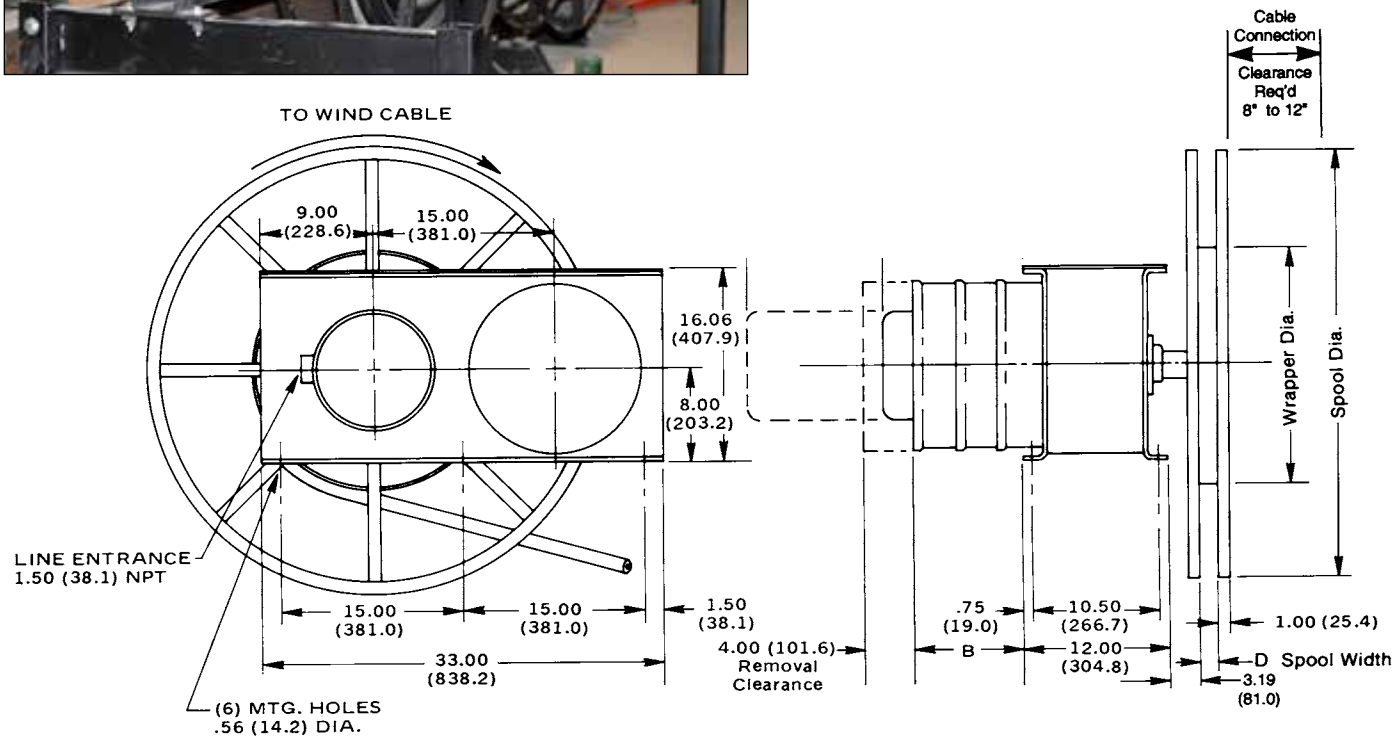

Downloaded from Arrow.com.

Motor Driven Reels

Features:

- Wind and store up to 120 feet of cable
- Average retrieval speed - 30 to 135 fpm (40.5mpm)
- Reversible 1,800 RPM, 230-460 VAC drive motor (Consult factory for DC, hazardous duty or explosion proof motor.)
- Electro-magnetic brake holds cable in place when motor is de-energized
- Limit Switch controls maximum up and down stops
- Capacities from 2–36 conductor cables, No.16 through No.10 AWG wire size (No. 8 – 1/0 AWG also available. Consult factory.)
- Four-way roller guide
- Weatherproof, dust-tight NEMA 4 (IP-54) slip-ring housing
- Welded steel frame
- Pre-lubricated, self-aligning bearings

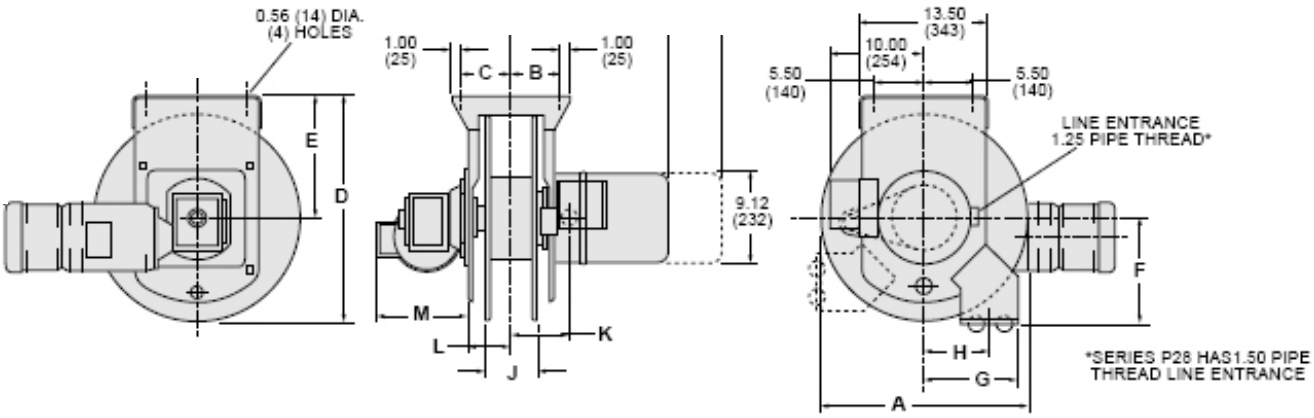

Reel Series	A	B	C	D	E	F	G	H	J	K	L
P14	14.00 (356)	4.75 (121)	4.75 (121)	16.50 (419)	9.00 (229)	7.75 (197)	9.50 (241)	6.50 (165)	4.25 (108)	5.25 (133)	4.12 (105)
P16	16.00 (406)	5.25 (133)	5.25 (133)	18.50 (470)	10.00 (254)	11.25 (286)	9.50 (241)	6.50 (165)	5.25 (133)	5.75 (146)	4.62 (118)
P18	18.00 (457)	5.25 (133)	5.25 (133)	20.00 (508)	11.00 (279)	11.25 (286)	9.50 (241)	6.50 (165)	5.25 (133)	5.75 (146)	4.62 (118)
P21	21.00 (533)	5.25 (133)	5.25 (133)	23.00 (584)	12.50 (318)	11.25 (286)	9.50 (241)	6.50 (165)	5.25 (133)	5.75 (146)	4.62 (118)
P24	24.00 (610)	5.25 (133)	8.75 (222)	26.00 (660)	14.00 (356)	12.75 (324)	10.12 (257)	7.12 (181)	5.25 (133)	5.75 (146)	4.62 (118)
P28	28.00 (711)	6.25 (159)	9.75 (248)	30.00 (762)	16.00 (406)	15.50 (394)	11.25 (286)	8.25 (210)	7.25 (184)	6.75 (172)	5.62 (143)

Downloaded from Arrow.com.

Level-Wind Low-Profile Reels

Features:

- Fit in the smaller spaces than standard profile reels. Handle same sizes and lengths of cable.
- Externally mounted springs can be easily adjusted or replaced.
- Parallel spring design provides greater application flexibility. Winding tension is tailored to your needs by increasing or decreasing number of springs and by easy spring adjustment.
- Motor and drive can also be applied in leu of springs.
- Level wind roller eliminates cable “pile-up” on spool.
- Standard 35 and 75 amp collectors used.
- Internally mounted Slip Ring.

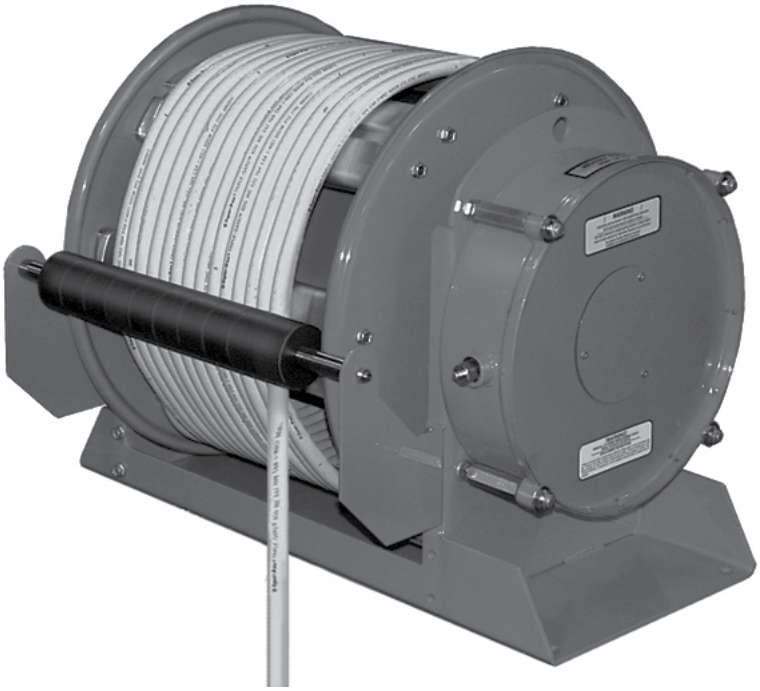

TYPICAL DIMENSIONS - Reel to handle 60’ of #10/4 conductor cable, hook/rotate application.

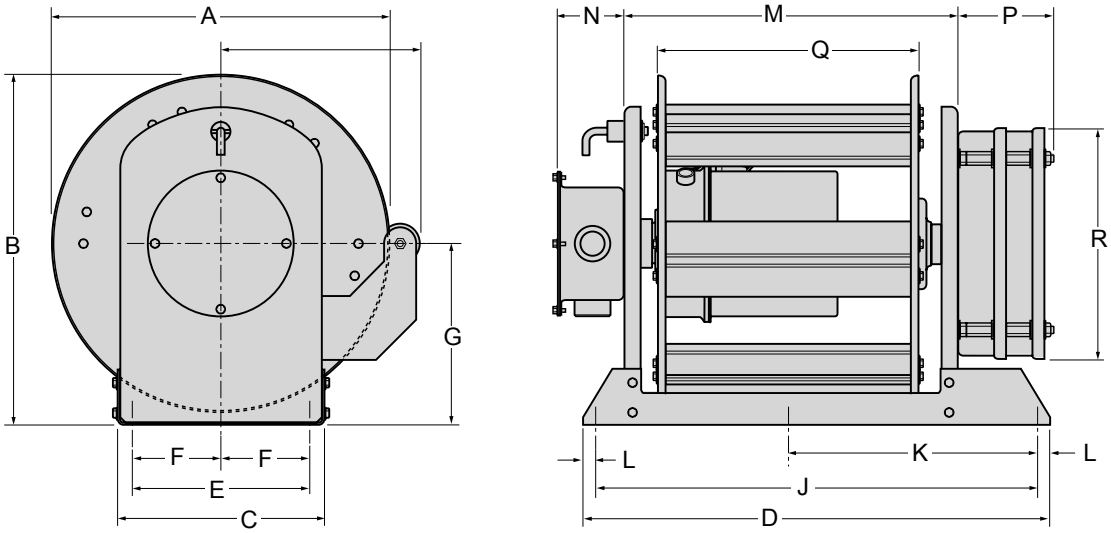

A	B	C	D	E	F	G	H	J	K	L	M	N	P	Q	R
21.00	21.75	12.86	29.00	11.00	5.50	11.25	12.38	27.50	15.53	.75	20.72	4.00	5.98	16.00	14.34

Downloaded from Arrow.com.

Combination Reels

Series 'CR' Combination Reels

Gleason Series 'CR' Reels are designed for use when the desire to disconnect the flexible cable from the Batten or other moving source and re-connect to another Batten or moving source without the use of VFD Motor Control or additional Control from the automated rigging system.

These Reels are equipped to provide spring operation during normal operation; and motorized override for payout, retrieval or batten change operation. Based on the popular 'S' Reel frame, this reel is capable of handling, Power, Control, DMX, Ethernet or other requirements at the fraction of the cost of VFD Motor and Control.

Movement is limited with our Hubbell Rotary Limit Switches

Downloaded from Arrow.com.

Rotary Limit Switches

Series 54 and 55 Rotary Limit Switches

Features:

- Four or Six gear ratios
- Right Hand, Left Hand or Dual Shaft models (RH shown in photos)
- Two, Three or Four switches
- Mount in any position
- Easy to wire with switch terminal screws
- Rugged die cast enclosures
- NEMA 4 construction (Exceeds requirements of NEMA 1 and NEMA 12)
- #404 Woodruff key slot, 0.19 dia. hole and setscrew dimple
- Multi-use shaft - attach drive sprocket using Woodruff key, pin or setscrew
- Standard or Extended Dwell cams
- Easy, precision timing adjustment using standard screwdriver and provided tool
- Industrial grade bearings
- Industrial duty S.P.D.T. or D.P.D.T. snap switches are UL and CSA listed

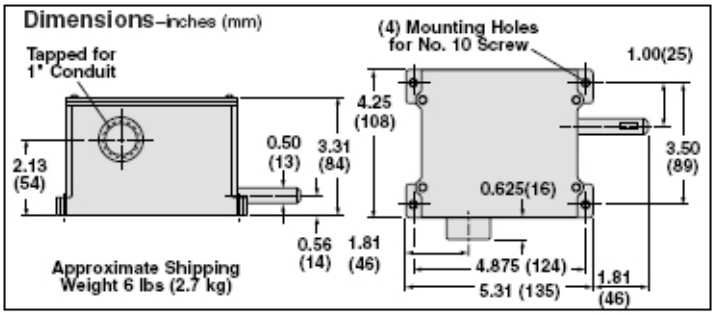

Series 54

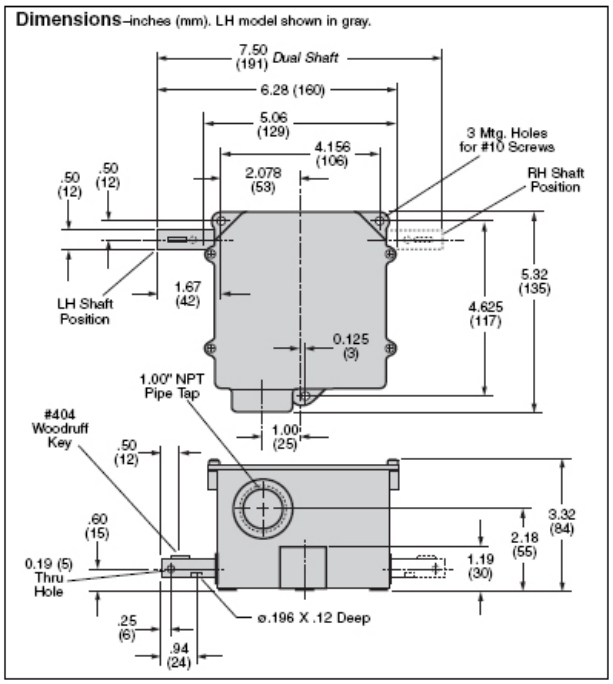

Series 55

Downloaded from Arrow.com.

Entertainment Industry Products
Hubbell Twist-Lock® Devices

Since 1929, when Harvey Hubbell obtained the first patents on Twist-Lock® devices and introduced them to the market, they have been the standard for the Entertainment Industry. Today, Hubbell Insulgrip Twist-Lock Devices continue to set the standard against which all quality industrial wiring devices are measured. The Insulgrip® line includes plugs, connectors, flanged inlets and outlets and flush mounting receptacles. With a single piece dust shield, tough nylon housing, visible identification and a roomy wiring chamber, these devices offer the most powerful cord grip in the industry.

The unparalleled acceptance and success of the Twist-Lock line is a tribute to the quality of this long lasting design. When selecting premium plugs and connectors for the Entertainment Industry, the decision is Hubbell.

Twist-Lock Devices Selection Chart
NEMA Grounding Twist-Lock

Poles	Wires	Amps	Volts	NEMA Code No.	AC HP Rating†	Plug Insulgrip	Plug Insulgrip	Connector Body Nylon	Connector Body Nylon
2	3	15	125	L5-15	0.5	HBL4720C	HBL4720CBK	HBL4729C	HBL4729CBK
			250	L6-15	1.5	HBL4570C		HBL4579C	
			277AC	L7-15	2	HBL4770C		HBL4779C	
		20	125	L5-20	1	HBL2311	HBL2311BK	HBL2313	HBL2313BK
			250	L6-20	2	HBL2321	HBL2321BK	HBL2323	HBL2323BK
			277AC	L7-20	2	HBL2331		HBL2333	
			480AC	L8-20	3	HBL2341		HBL2343	
			600AC	L9-20		HBL2351		HBL2353	
		30	125	L5-30	2	HBL2611	HBL2611BK	HBL2613	HBL2613BK
			250	L6-30	2	HBL2621	HBL2621BK	HBL2623	HBL2623BK
			277AC	L7-30	3	HBL2631		HBL2633	
			480AC	L8-30	5	HBL2641		HBL2643	
			600AC	L9-30		HBL2651		HBL2653	
3	4	20	125/250	L14-20	2 (1)	HBL2411	HBL2411BK	HBL2413	HBL2413BK
			3Ø250AC	L15-20	3	HBL2421		HBL2423	
			3Ø480AC	L16-20	5	HBL2431		HBL2433	
		30	125/250	L14-30	2	HBL2711	HBL2711BK	HBL2713	HBL2713BK
			3Ø250AC	L15-30	3	HBL2721		HBL2723	
			3Ø480AC	L16-30	10	HBL2731		HBL2733	
			3Ø600AC	L17-30		HBL2741		HBL2743	
4	5	20	3ØY120/208AC	L21-20	2	HBL2511	HBL2511BK	HBL2513	HBL2513BK
			3ØY277/480AC	L22-20	5	HBL2521		HBL2523	
			3ØY347/600AC	L23-20		HBL2531		HBL2533	
		30	3ØY120/208AC	L21-30	3	HBL2811	HBL2811BK	HBL2813	HBL2813BK
			3ØY277/480AC	L22-30	10	HBL2821		HBL2823	
			3ØY347/600AC	L23-30		HBL2831		HBL2833	

Flat Cable Cord Clamp Devices

4	5	20	3ØY120/208AC	L21-20	2	HBL2511FC		HBL2513FC	
		30	3ØY120/208AC	L21-30	3	HBL2811FC		HBL2813FC	

Midget Twist-Lock

Poles	Wires	Amps	Volts	NEMA Code No.	Plug	Plug Insulation Displacement	Connector	Connector Insulation Displacement
2	2	15	125	ML-1	HBL7465V		HBL7464V	
2	3	15	125	ML-2	HBL7494	HBL7494V	HBL7593	HBL7593V
3	3	15	125/250	ML-3	HBL7485	HBL7485V	HBL7484	HBL7484V

†The Horsepower Ratings are the Phase Values. The Values in Parentheses are Phase to Neutral.

Note: Horsepower Ratings are Applicable to Plugs and Receptacles Only and Do Not Apply to Connectors, Flanged Inlets and Outlets.

Downloaded from Arrow.com.

Entertainment Industry Products

Cable Carriers

Series 'GRP' Cable Carriers

Protect your cable and hoses with our GRP Non-metallic Cable Carriers. Tough molded nylon links easily snap together to form exact length required. Sizes for cable or hoses to 1.676 inch diameter; cable hose bundle to 4.05 inches wide. Available in standard, flip-top and fully enclosed styles. Group cables and hoses with an optional snap-in separator.

Other styles and sizes of Cable Carriers are available. Visit our web site at www.hubbell-gleason.com for more information.

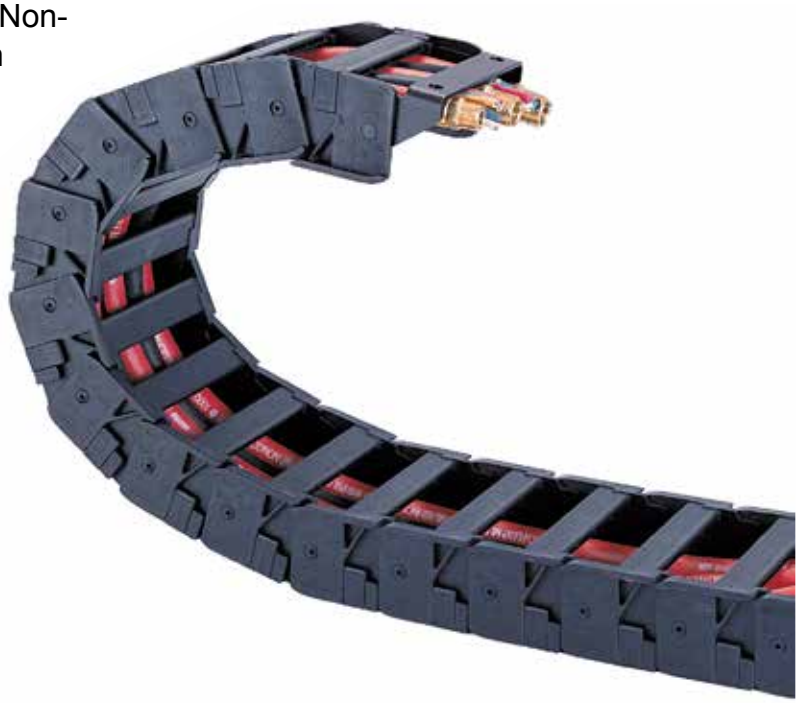

Gleason® -- OVER 100 YEARS OF EXPERIENCE!

Gleason Reel®

HUBBELL A HUBBELL COMPANY

Gleason Reel Corp.
600 S. Clark St.
Mayville, WI 53050
Ph: 920-387-4120 · Fax: 920-387-4189
www.hubbell-gleason.com

Brochure: TP1113

Downloaded from Arrow.com.