# Multilayer Ceramic Chip Capacitor

**Part Number:** 0805J0500471JCT

**Description:** 0805 50Vdc 470pF ±5% C0G/NP0 (1B) (CTI ≥ 600)

A range of C0G/NP0 MLC capacitors to suit a variety of applications. Available in a wide selection of chip sizes, working voltages and termination options, including FlexiCap™, the world's first commercially available flexible termination.

Suffix code PXX or PX mandates the use of precious metal electrode (PME) materials. This may incur additional costs.

Parts suffix coded VM2 are designed and qualified for mounting as 1210 case size with increased thickness. Please refer to the factory to discuss mounting in alternative ways.

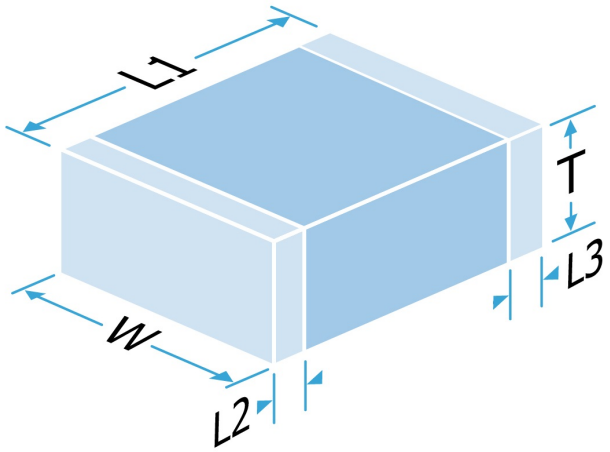


## Mechanical Specification

| | |
|---|---|
| Size Code | 0805 |
| Length (L1) in mm (") | 2.0 ± 0.20 (0.079 ± 0.008) |
| Width (W) in mm (") | 1.25 ± 0.20 (0.049 ± 0.008) |
| Thickness (T) in mm (") | 1.3 Max (0.051 Max) |
| Minimum Termination Band (L2,L3) in mm (") | 0.25 (0.010) |
| Maximum Termination Band (L2,L3) in mm (") | 0.75 (0.030) |
| Termination Material | Nickel Barrier, Sn Plated Solder (RoHS compliant) |
| Solderability | IEC-60068-2-58 |
| Packaging | 7" Reel Horizontal Orientation, 3000 per reel |
| Conformal Coating | Not normally required |

## General Electrical Specification

| | |
|---|---|
| Rated Voltage | 50Vdc |
| Nominal Capacitance Value | 470pF |
| Capacitance Tolerance | ±5% |
| Tangent of Loss Angle (Tan δ) | ≤0.0015 |
| Capacitance and Tan δ Test Conditions | 1.0Vrms @ 1MHz |
| Voltage Proof<br>(Voltage applied for 5 secs max. @ 50mA max. charge current. 50% Max, RH) | 125Vdc |
| Min Insulation Resistance (IR) | 100.00GOhm @ 50Vdc |
| Dielectric Classification | C0G/NP0 (1B) (CTI ≥ 600) |
| Rated Temperature Range | -55°C / +125°C |
| Maximum Capacitance Change over Temperature Range | No DC Voltage 0±30ppm/°C<br>Rated DC Voltage - |
| Climatic Category (IEC) | 55/125/56 |
| Ageing Characteristic | Zero |


**Knowles Precision Devices - Sales**

Europe: KPD-Europe-sales@knowles.com

Asia: KPD-Asia-sales@knowles.com

USA: KPD-NA-sales@knowles.com

**www.knowlescapacitors.com**


This datasheet is for a standard item and is confirmed valid on the date generated, the latest published data for this part may differ and is available at http://www.knowlescapacitors.com or by contacting us.


© The information contained on this drawing is confidential and may not be copied in whole or part in any form or disclosed to a third party without the consent of Knowles and any customer mentioned within this specification.


Data is correct to the best of our knowledge, errors and omissions excepted.

Date: Saturday, October 03, 2026

20261003 130504839UTC


Downloaded from Arrow.com.

# Multilayer Ceramic Chip Capacitor

| | |
|---|---|
| **Part Number:** 0805J0500471JCT | **Description:** 0805 50Vdc 470pF ±5% C0G/NP0 (1B) (CTI ≥ 600) |

## Environmental

| | |
|---|---|
| RoHS Compliant to 2011/65/EC as amended by 2015/863/EU | Compliant |
| REACH Compliant | 253 compliant |
| California Proposition 65 | No exposure risk |

## Board Layout

Knowles' conventional 2-terminal chip capacitors can generally be mounted using pad designs in accordance with international specification IPC-7351, Generic Requirements for Surface Mount Design and Land Pattern Standards, but there are some other factors that have been shown to reduce mechanical stress, such as reducing the pad width to less than the chip width. In addition, the position of the chip on the board should be considered.

Some high voltage parts may require modifications to the board layout and/or the addition of a conformal coating to prevent flashover, especially under high humidity conditions. Board cleanliness and environmental conditions can also impact this. Refer to application note AN0043 for further information.

IPC-7351 pad design

| | 0805 | |
|---|---|---|
| C | 1.80mm | 0.071" |
| Y | 1.15mm | 0.045" |
| X | 1.45mm | 0.057" |

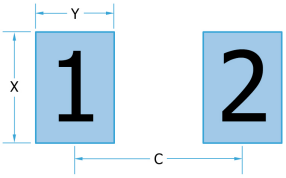


## Packaging

Tape packaging information for tape-and-reel parts:

Tape and reel packing of surface mounting chip capacitors for automatic placement are in accordance with IEC60286-3.

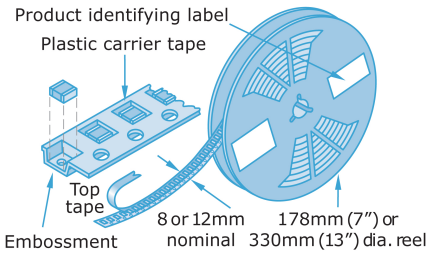


## Soldering

Reflow solder in accordance with IPC-A-610. Recommended reflow profile as laid down in IPC/JEDEC J-STD-020.

Wave soldering is also possible, but care must be taken for case sizes 1210 and larger and component thickness >1.0mm. Trials are encouraged.

Hand soldering is not recommended and can lead to component damage through thermal shock.

PdAg terminations are primarily intended for conductive epoxy attachment - they may be suitable for soldering but trials are recommended.

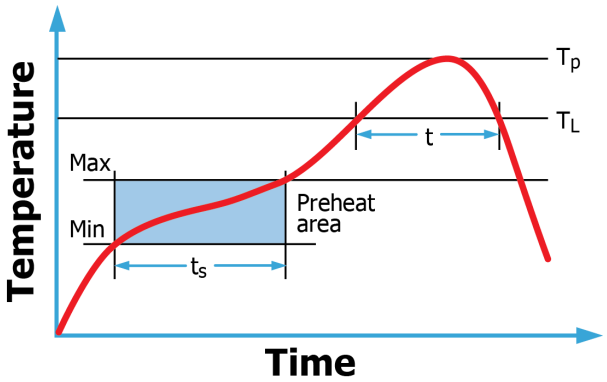


Application notes with mounting and handling guidance are available on request.

Compex DLI Johanson MFG Novacap Syfer Voltronics


**Knowles Precision Devices - Sales**

Europe: KPD-Europe-sales@knowles.com

Asia: KPD-Asia-sales@knowles.com

USA: KPD-NA-sales@knowles.com

**www.knowlescapacitors.com**


This datasheet is for a standard item and is confirmed valid on the date generated, the latest published data for this part may differ and is available at http://www.knowlescapacitors.com or by contacting us.


© The information contained on this drawing is confidential and may not be copied in whole or part in any form or disclosed to a third party without the consent of Knowles and any customer mentioned within this specification.


Data is correct to the best of our knowledge, errors and omissions excepted.

Date: Saturday, October 03, 2026

20261003 130504839UTC


Downloaded from Arrow.com.