SERIES: PSK-S25B | **DESCRIPTION:** AC-DC POWER SUPPLY

FEATURES

- universal input range (90 ~ 264 Vac)
- option to support large transient loads (2x rated current)[4]
- Class B emissions (EN55032/CISPR/FCC)
- certified to IEC/EN/UL 62368-1
- designed to meet IEC/EN 60335
- short circuit protection
- over voltage protection
- < 100 mW no-load power consumption
- Class II

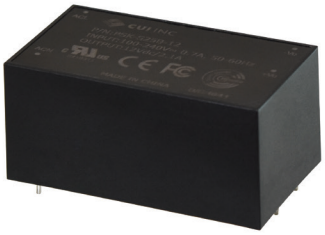

MODEL	output voltage (Vdc)	output current min (A)	output current max (A)	output power max (W)	ripple and noise[1] max (mVp-p)	efficiency[2] typ (%)
PSK-S25B-5*	5	0	4.00	20	50	81
PSK-S25B-12	12	0	2.10	25	120	84
PSK-S25B-15	15	0	1.67	25	150	85
PSK-S25B-24	24	0	1.05	25	240	86
PSK-S25B-36	36	0	0.70	25	360	87
PSK-S25B-48*	48	0	0.52	25	480	87

Notes:
1. At full load, nominal input, 20 MHz bandwidth oscilloscope, with 1 µF ceramic and 10 µF electrolytic capacitors on the output.
2. At 230 Vac, full load, 25°C.
3. All specifications are measured at Ta=25°C, nominal input voltage, and 75% rated output load unless otherwise specified.
4. Parts with the "-PB" suffix can sustain 2 times the rated output load for 10 seconds (MAX) and 10% duty cycle (MAX). This functionality requires a 33 µF / 400 V capacitor connected between pins BC+ and BC-. See Power Boost Section below for more details.
5. * Discontinued model.

PART NUMBER KEY

PSK-S25B - XX - XX

- PSK-S25B: Base Number
- XX: Output Voltage
- XX: "Blank" = No Power Boost; PB = Power Boost Function

Please read our datasheet & drawing disclaimer here.

Downloaded from Arrow.com.

INPUT

parameter	conditions/description	min	typ	max	units
voltage		90 120		264 370	Vac Vdc
frequency		47		63	Hz
current	at 100 Vac, full load			700	mA
inrush current	at 240 Vac, cold start, 25°C			60	A
leakage current	at 264 Vac			0.25	mA

OUTPUT

parameter	conditions/description	min	typ	max	units
capacitive load	5 Vdc output models 12 Vdc output models 15 Vdc output models 24 Vdc output models 36 Vdc output models 48 Vdc output models			81,000 40,900 19,800 6,600 4,000 2,170	µF µF µF µF µF µF
initial set point accuracy	5 Vdc output model all other models			±2 ±1	% %
line regulation	measured at high line to low line at full load			±1	%
load regulation	measured at 10%~100% load			±1	%
start-up time				3	s
hold-up time	at 115 Vac		8		ms
switching frequency			65		kHz
temperature coefficient			±0.05		%/°C

PROTECTIONS

parameter	conditions/description	min	typ	max	units
over voltage protection	TVS to clamp output votlage 5 Vdc output models 12 Vdc output models 15 Vdc output models 24 Vdc output models 36 Vdc output models 48 Vdc output models		 6.8 15.0 18.0 30.0 47.0 56.0		 Vdc Vdc Vdc Vdc Vdc Vdc
short circuit protection	hiccup, auto recovery				

SAFETY & COMPLIANCE

parameter	conditions/description	min	typ	max	units
isolation voltage	input to output for 1 minute	3,000			Vac
isolation resistance		100			MΩ
safety approvals	certified to IEC/EN/UL 62368-1 designed to meet IEC/EN 60335				
safety class	Class II				
conducted emissions	EN55032, EN61000-6-3:2012, Class B, 47 CFR FCC Part 15 Subpart B (Class B)				
radiated emissions	EN55032, EN61000-6-3:2012, Class B, 47 CFR FCC Part 15 Subpart B (Class B)				
harmonic current emissions	EN61000-3-2:2014				
voltage fluctuations & flicker	EN61000-3-3:2013				

Downloaded from Arrow.com.

SAFETY & COMPLIANCE (CONTINUED)

parameter	conditions/description	min	typ	max	units
ESD	IEC61000-4-2:2008, air discharge: ± 8 kV, contact discharge: ± 4 kV				
radiated immunity	IEC61000-4-3:2010				
EFT/burst	IEC61000-4-4:2012, ± 0.5 kV, ± 1 kV, ± 2 kV				
surge	IEC61000-4-5:2014, L-N: ± 0.5 kV, ± 1 kV				
conducted immunity	IEC61000-4-6:2013				
power frequency magnetic field	IEC61000-4-8:2009				
voltage dips & interruptions	IEC61000-4-11:2004, Dip: 30%, 10 ms, Dip: 60%, 100 ms, Dip: >95%, 5,000 ms				
MTBF	as per MIL-HDBK-217F, at 115 Vac, 25°C, GB	500,000			hours
RoHS	yes				

Notes: 4. The power supply is considered a component which will be installed into final equipment. The final equipment still must be tested to meet the necessary EMC directives.

ENVIRONMENTAL

parameter	conditions/description	min	typ	max	units
operating temperature	see derating curves	-30		70	°C
storage temperature		-30		85	°C
operating humidity	non-condensing			93	%
altitude				5,000	m
vibration	as per MIL-STD-810F Table 514.5C-VIII; 15~2000 Hz for 1 hour on each axis for 3 hours		4		G
shock	as per MIL-STD-810F Table 516.5, Table 516.5-1; for 10 ms on each axis 3 times		75		G

DERATING CURVES

TEMPERATURE DERATING CURVE (5 Vdc output models)

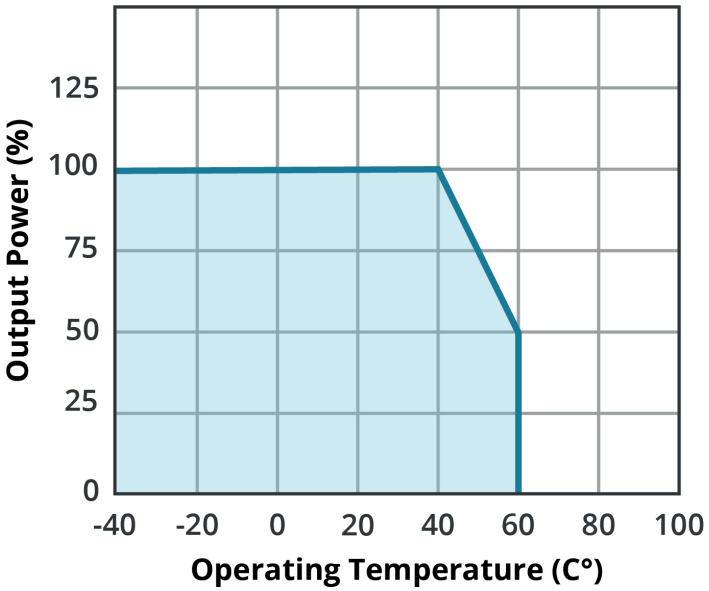

TEMPERATURE DERATING CURVE (all other models)

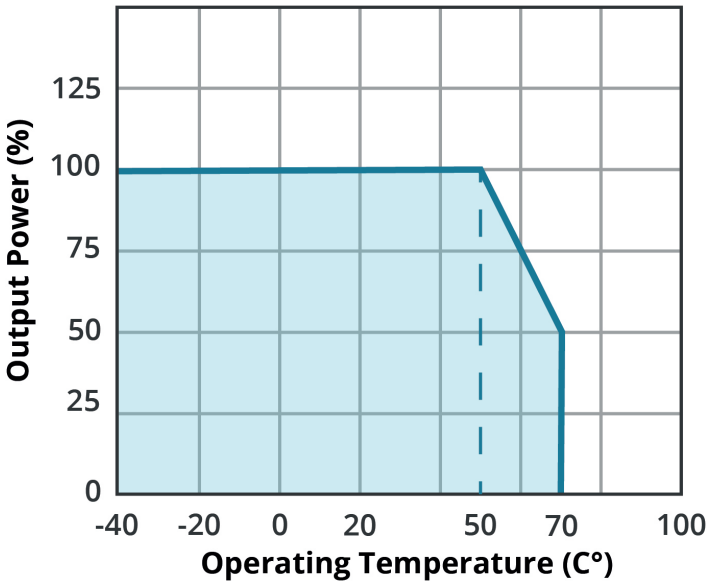

Downloaded from Arrow.com.

MECHANICAL

parameter	conditions/description	min	typ	max	units
dimensions	2.091 x 1.193 x 0.976 (53.10 x 30.30 x 24.80 mm)				inches
weight			105		g

MECHANICAL DRAWING

units: inch [mm]
tolerance: ±0.020 [±0.50]

PIN CONNECTIONS		
PIN	Function	
	Standard	Power Boost
1	AC (L)	AC (L)
2	AC (N)	AC (N)
3	+Vo	+Vo
4	-Vo	-Vo
5	No Pin	BC+
6	No Pin	BC-

Standard

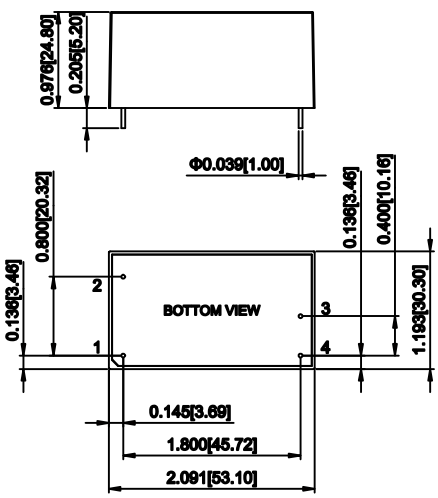

Power Boost

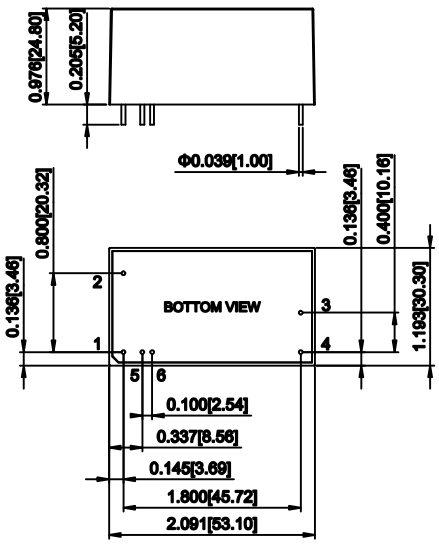

EMC RECOMMENDATIONS

When used in a Class I system implementation (utilizing an Earth Ground connection as depicted in the schematic below), the PSK-S25B series requires additional inductance and Y-Caps to meet EN55032 Class B. These additional components are not required in a Class II implementation where no Earth Ground is present.

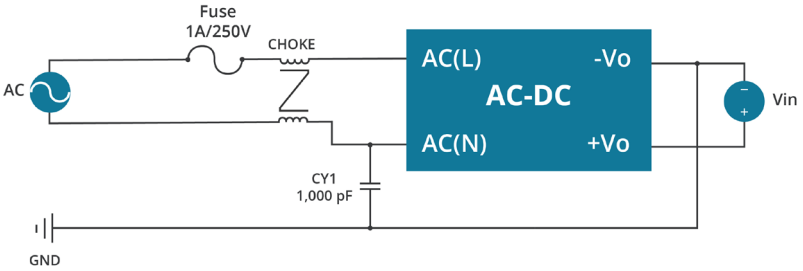

CHOKE			
Specification	Inductance	Duplex Winding/Turns	Manufacturers
UU9.8 R12K	10mH	2-UEW Φ 0.27*85Ts	SEND POWER

Y-CAP			
Subclass	Withstand Voltage	Capacitance	Manufacturers
Y1 CAP	250 V (min.)	1000 pF (typ.)	TDK

Downloaded from Arrow.com.

POWER BOOST

The PSK-S25B Series has an ordering option called Power Boost ("-PB" suffix), which can double the rated output power provided to the load for a maximum of 10 seconds and repeated duty cycle of 10%. This functionality requires a 33 uF / 400 V capacitor to be connected between the BC+ and BC- pins as depicted in the schematic below. This external capacitor is not required if the PSK-S25B is operating from 220 Vac mains. When utilizing the Power Boost Feature, care must be taken not to thermally overstress the unit. The combined load (nominal plus peak) should not exceed 65% of the full load rating when averaged out over time.

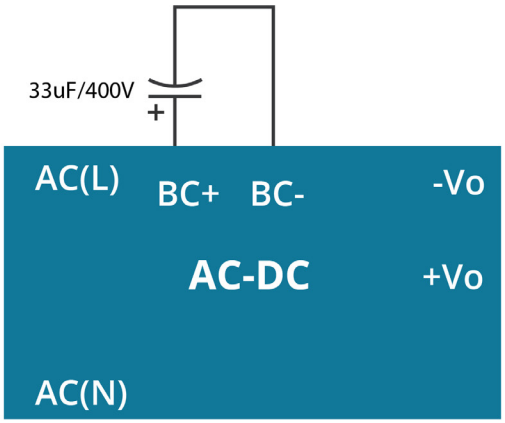

Top view

INSTALLATION INSTRUCTIONS

The mounting holes should all be 1.5 mm in diameter. A minimum of 4 mm clearance is required for all four sides of the unit and a minimum of 5 mm clearance is required above the top surface of the unit.

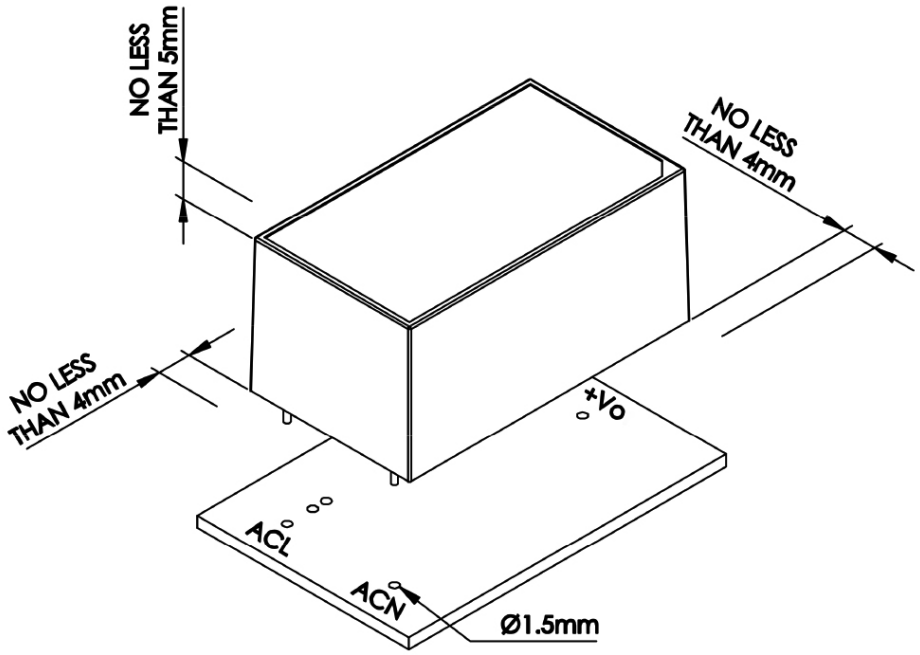

Downloaded from Arrow.com.

REVISION HISTORY

rev.	description	date
1.0	initial release	02/13/2020
1.01	updates to mechanical & power boost sections	04/08/2020
1.02	curves and circuit drawings updated	03/26/2021
1.03	discontinued models PSK-S25B-5 & PSK-S25B-48	09/13/2022

The revision history provided is for informational purposes only and is believed to be accurate.

CUI INC
a bel group

Headquarters
20050 SW 112th Ave.
Tualatin, OR 97062
800.275.4899

Fax 503.612.2383
cui.com
techsupport@cui.com

CUI offers a two (2) year limited warranty. Complete warranty information is listed on our website.

CUI reserves the right to make changes to the product at any time without notice. Information provided by CUI is believed to be accurate and reliable. However, no responsibility is assumed by CUI for its use, nor for any infringements of patents or other rights of third parties which may result from its use.

CUI products are not authorized or warranted for use as critical components in equipment that requires an extremely high level of reliability. A critical component is any component of a life support device or system whose failure to perform can be reasonably expected to cause the failure of the life support device or system, or to affect its safety or effectiveness.

Downloaded from Arrow.com.