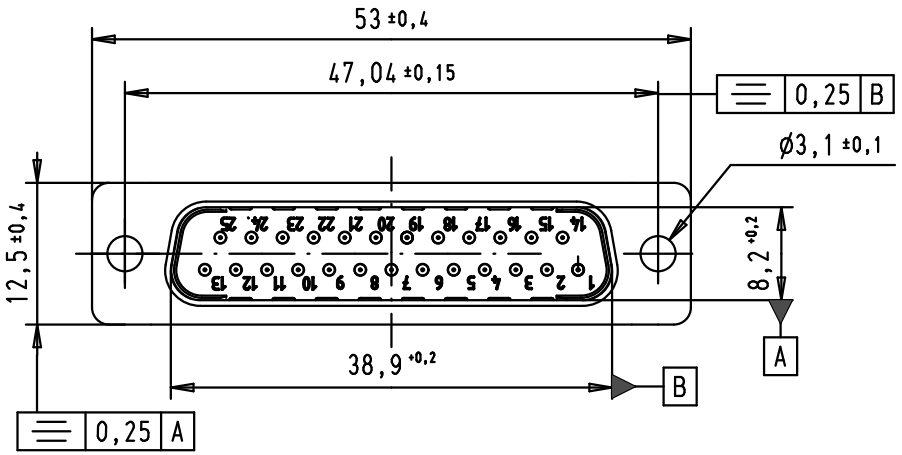

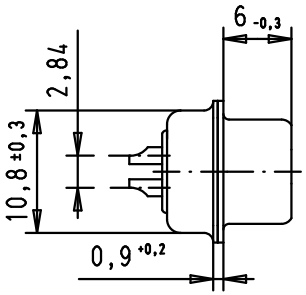

Solder buckets for AWG 20

SPECIFICATION

Performance level	PL2
Capacitance	1000pf±20%
Working Voltage	100v
Current Rating	7.5A
Insulation Resistance	>1GΩ

FREQUENCY (MHz)	ATTENUATION dB
5	1dB
10	3dB
50	12dB
100	20dB
500	34dB
1000	30dB

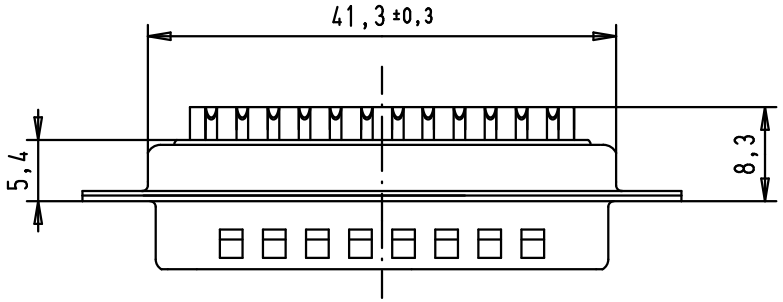

Mod.	Dat.	Name
36283	12/01/12	SD
33423	06/02/06	JMDR
31058	8-JUL-02	CV

	Dat.	Name
Detail.	8-JUL-02	CV
Insp.	12/01/12	JB
Stand.		

All Dim. in mm
Orig. Size DIN A 4

HARTING EURL
F-95972 Paris

D-Sub, male, Straight
25 Poles, turned solder buckets,
with dimples and holes

TB 09643217230

Sub.

Ma?Mstab/ *Scale* 1.5:1

Blatt/ *Page* 1/1

Downloaded from Arrow.com.