User Manual
SKU: TPX00256

Description

The Arduino® USB-C Power Supply (65W) is a compact wall adapter providing up to 65 W via USB-C using the USB Power Delivery (PD) protocol. It is the recommended power source for the Arduino® VENTUNO™ Q and its peripherals. The adapter supports 5 VDC, 9 VDC, 12 VDC, 15 VDC (up to 3.0 A), and 20 VDC (up to 3.25 A), automatically matching the device's needs. It features a foldable plug for easy transport and interchangeable EU and UK plugs.

Downloaded from Arrow.com.

CONTENTS

1 Features **4**
1.1 General Specifications 4
1.2 Input Specifications 5
1.3 Output Specifications 5
1.4 Regional Plug Options 6
2 Usage **7**
2.1 Key Use Cases 7
2.2 Connection Method 7
3 Technical Specifications **8**
3.1 Output Characteristics 8
3.1.1 Voltage Regulation 8
3.1.2 Ripple and Noise 8
3.1.3 Dynamic Response 9
3.2 Efficiency 9
3.3 EU Ecodesign (ErP) Compliance 9
3.4 Protection Features 10
3.5 Operating Conditions 10
3.6 Safety and EMC Specifications 10
3.6.1 Electrical Safety 10
3.6.2 EMI/EMC Compliance 11
4 Mechanical Information **12**
4.1 Dimensions 12
4.2 Package Contents 14
5 Environmental and Reliability **15**
5.1 Reliability Requirements 15
5.2 Mechanical Stress Tests 15
5.3 Environmental Compliance 15
6 Certifications **16**
6.1 Safety Certifications 16
6.2 Declaration of Conformity CE DoC (EU) 16
6.3 Declaration of Conformity to EU RoHS & REACH 16
6.4 Conflict Minerals Declaration 17
7 FCC Caution **18**

Downloaded from Arrow.com.

8 Company Information **18**

9 Related Products **18**

10 Reference Documentation **19**

11 Document Revision History **19**

Downloaded from Arrow.com.

1 Features

1.1 General Specifications

Arduino USB-C Power Supply (65W)

The table below summarizes the general specifications of the power supply:

Feature	Specification
Model Number	TPX00256
Adapter Type	Plug-in wall adapter (foldable plug)
Output Connector	USB-C (USB Type-C)
Dimensions (Body)	64 × 64 × 30 mm (folded plug)/64 × 80.06 × 30 mm (unfolded plug)
Material	PC (Polycarbonate) housing

Downloaded from Arrow.com.

1.2 Input Specifications

The following table lists the AC input characteristics of the power supply:

Parameter	Specification
Rated Input Voltage	100 - 240 VAC
Input Voltage Range	90 - 264 VAC
Input Frequency	47 - 63 Hz (50/60 Hz)
Maximum Input Current	1.5 A

1.3 Output Specifications

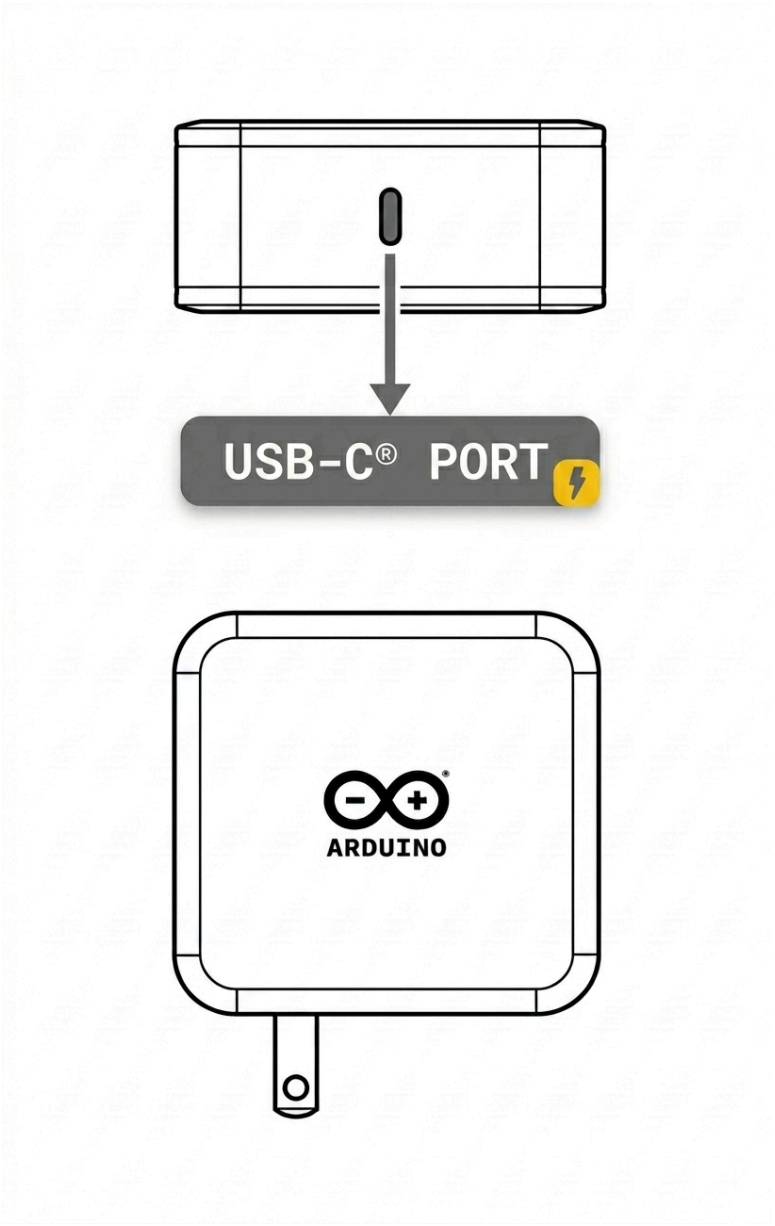

Arduino USB-C Power Supply Output (65W)

Downloaded from Arrow.com.

The power supply delivers the following USB Power Delivery output profiles:

Output Voltage	Maximum Current	Maximum Power
5.0 VDC	3.0 A	15 W
9.0 VDC	3.0 A	27 W
12.0 VDC	3.0 A	36 W
15.0 VDC	3.0 A	45 W
20.0 VDC	3.25 A	65 W

Combined maximum output power: 65 W

Important note: The power supply negotiates voltage and current using the PD protocol based on device needs.

1.4 Regional Plug Options

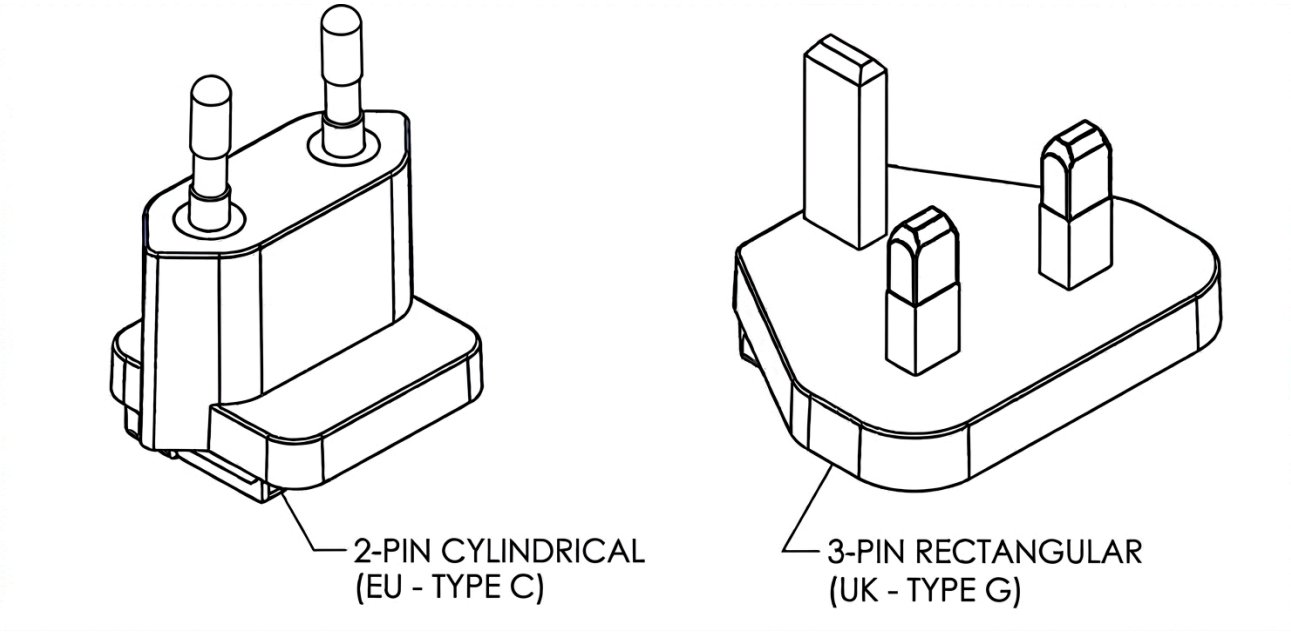

Regional Plug Options

The power supply is available with the following regional plug options:

Region	Plug Type	IEC Type	Dimensions (W × H × D)
United States (Default)	Foldable	Type A	Integrated (foldable)
Europe (EU)	Interchangeable	Type C	34.6 - 36.0 × 27.5 × 37 mm
United Kingdom (UK)	Interchangeable	Type G	48.98 × 39.83 × 22.23 - 23.23 mm

Downloaded from Arrow.com.

Important note: The EU and UK plugs are interchangeable and can be replaced without tools. Make sure the correct plug is attached for your region before use.

2 Usage

The USB-C Power Supply (65W) provides power for USB-C devices and their peripherals through the USB Power Delivery (PD) protocol. Within the Arduino ecosystem, it is the recommended power source for the VENTUNO Q. When used with USB-C hubs or docks, the power supply can sustain a connected device together with multiple peripherals such as displays, USB devices, and network adapters.

2.1 Key Use Cases

The power supply supports the following use cases:

- **Direct device power:** Powers USB-C devices directly during development and operation.
- **Hub or dock power delivery:** Supplies USB-C hubs and docks with enough headroom to power a device and several peripherals at once.
- **Fast charging:** Charges USB-C devices through automatic power negotiation.
- **Multi-device support:** Compatible with single-board computers, microcontroller boards, and other USB-C devices.

2.2 Connection Method

For standalone operation, connect the power supply's USB-C output directly to the device's USB-C port, then plug the adapter into a mains outlet within the rated input range of 100 - 240 VAC. The adapter and the connected device automatically negotiate the appropriate voltage and current, so no manual configuration is needed.

For expanded I/O, connect the power supply to a USB-C hub or dock, such as the Arduino® USB-C Hub (TPX00241), through its PD input port, then connect the hub to the device. The hub distributes power to the device and the attached peripherals simultaneously.

For devices that use a DC barrel jack input, connect the included USB-C to jack adapter (20 VDC X 3A) to the power supply's USB-C output, then plug the barrel jack into the device. The adapter provides a fixed output of 20 VDC/3A through a 5.5 × 2.1 mm center-positive barrel jack.

Important note: When powering USB-C hubs or docks (for example, the Arduino® USB-C Hub) with multiple high-power peripherals, connect the power supply to the hub's PD input port. The hub distributes power to the device and the connected peripherals simultaneously. Make sure the total power consumption does not exceed 65 W.

Downloaded from Arrow.com.

3 Technical Specifications

3.1 Output Characteristics

3.1.1 Voltage Regulation

The output voltage range for each Power Delivery profile is shown below.

Output Voltage	Voltage Range
5.0 VDC	4.65 - 5.25 VDC
9.0 VDC	8.55 - 9.45 VDC
12.0 VDC	11.4 - 12.6 VDC
15.0 VDC	14.25 - 15.75 VDC
20.0 VDC	19.0 - 21.0 VDC

3.1.2 Ripple and Noise

The ripple and noise characteristics are specified as follows:

Parameter	Specification
Ripple and Noise (all modes)	200 mVp-p maximum (at full load)
Measurement Bandwidth	20 MHz

Measurement conditions: Ripple and noise are measured using a 20 MHz oscilloscope, with a 0.1 µF ceramic and 10 µF electrolytic capacitor at rated input/output.

Downloaded from Arrow.com.

3.1.3 Dynamic Response

The dynamic response of the power supply is characterized by the following parameters:

Parameter	Specification
Turn-on Delay	3 seconds maximum @ 115 VAC, full load
Hold-up Time	5 ms minimum @ 230 VAC, full load
Rise Time	80 ms maximum (10% to 90% of rated output)

3.2 Efficiency

The minimum average efficiency for each output mode, measured at 115 VAC and 230 VAC, is listed below.

Output Mode	Average Efficiency
5.0 VDC/3.0 A	81.39% minimum
9.0 VDC/3.0 A	86.62% minimum
12.0 VDC/3.0 A	87.40% minimum
15.0 VDC/3.0 A	87.73% minimum
20.0 VDC/3.25 A	88.00% minimum

No-load power consumption: ≤ 0.21 W @ 115 - 230 VAC

3.3 EU Ecodesign (ErP) Compliance

The following table lists the efficiency and no-load power values reported for compliance with EU Regulation 2019/1782 on ecodesign requirements for external power supplies.

Parameter	Value
Average Active Efficiency	89.76%
Efficiency at 10% Load	80.21%
No-Load Power Consumption	0.122 W

Important note: These values are measured according to the test conditions defined by EU Regulation 2019/1782. The minimum efficiency values per output profile listed in the Efficiency section are derived from the manufacturer specification and represent guaranteed minimums, whereas the ErP values reflect measured compliance results.

Downloaded from Arrow.com.

3.4 Protection Features

The power supply includes three built-in protection mechanisms that safeguard both the adapter and the connected device against fault conditions:

Protection	Description
Over Current Protection (OCP)	Triggers when the output current reaches 105% - 150% of the maximum rated load. The output enters hiccup mode and recovers automatically once the fault is removed.
Short Circuit Protection (SCP)	Reduces the input power if the output is short-circuited, preventing damage. The supply recovers automatically once the short circuit is removed.
Over Voltage Protection (OVP)	Triggers if the output voltage exceeds its rated value. The output enters hiccup mode and recovers automatically once the fault is removed.

3.5 Operating Conditions

The power supply is designed to operate and be stored within the following conditions:

Parameter	Range
Operating Temperature	0 - 35 °C
Operating Humidity	10 - 90% RH (non-condensing)
Storage Temperature	-40 - 70 °C
Storage Humidity	5 - 95% RH (non-condensing)

3.6 Safety and EMC Specifications

3.6.1 Electrical Safety

The electrical safety characteristics are listed in the table below.

Parameter	Specification
Dielectric Strength	3000 VAC @ 50 Hz, 5 mA max, 60 seconds
Production Hi-Pot Test	3600 VAC @ 50 Hz, 5 mA max, 3 seconds
Leakage Current	0.25 mA maximum @ 230 VAC/50 Hz
Insulation Resistance	10 MΩ minimum @ 500 VDC, 90% RH
Flammability Rating	UL94V-0 (minimum)
Protection Class	Class II (double insulated)

Downloaded from Arrow.com.

3.6.2 EMI/EMC Compliance

The power supply complies with the following EMI and EMC standards:

Standard	Compliance
Conducted & Radiated Emissions	EN 55032/35, BS EN 55032/35, FCC Part 15
ESD Immunity	EN 61000-4-2 (±4 kV contact, ±8 kV air)
EFT/Burst Immunity	EN 61000-4-4 (±1 kV, AC input)
Surge Immunity	EN 61000-4-5 (±2 kV common mode, ±1 kV differential mode)

Downloaded from Arrow.com.

4 Mechanical Information

4.1 Dimensions

The power supply has a compact form factor. The integrated US plug folds flat for easy transport and storage, and interchangeable EU and UK plugs are available for regional use, as described in the Regional Plug Options section.

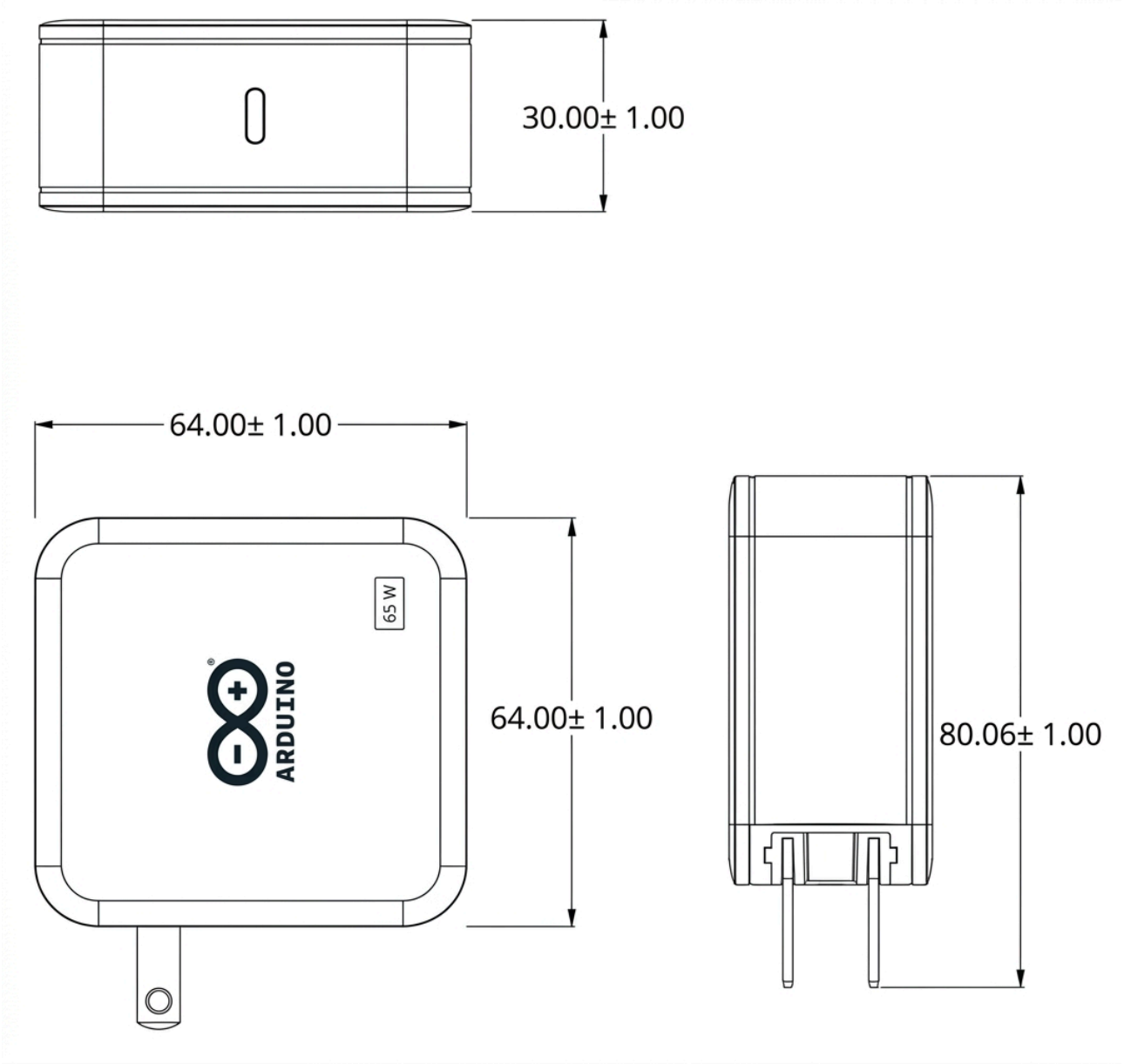

Power Supply Dimensions

The overall dimensions in the folded and unfolded configurations are listed below.

Configuration	Dimensions (W × L × H)
With US plug folded	64 × 64 × 30 mm

Downloaded from Arrow.com.

Configuration	Dimensions (W × L × H)
With US plug unfolded	64 × 80.06 × 30 mm

Downloaded from Arrow.com.

4.2 Package Contents

The package includes the following items:

- Arduino® USB-C Power Supply (65W) (x1)
- Region-specific plug (x2)
- USB-C to jack adapter 20V X 3A (x1)

Arduino USB-C Power Supply (65W) unboxing

Downloaded from Arrow.com.

5 Environmental and Reliability

5.1 Reliability Requirements

The reliability requirements for the power supply are summarized below.

Parameter	Specification
MTBF	30,000 hours minimum @ 25 °C, 80% load, nominal input
High Temperature Test	Normal operation @ 240 VAC, full load, 35 °C ambient
Salt Spray Test	24 hours @ 5% salt mist; no corrosion or oxidation on USB and metal parts

5.2 Mechanical Stress Tests

The power supply is validated against the following mechanical stress tests:

Test Type	Specification
Vibration Test	10 - 300 Hz sweep, 1.0 G constant (3.5 mm displacement), 1 hour per axis (X, Y, Z)
Vibration Criteria	No visible damage, normal operation after test
Drop Test	6 faces, 1 meter height onto a concrete surface (one drop per face)
Drop Criteria	Plug may bend, and housing may scratch, but no structural damage; normal operation after test

5.3 Environmental Compliance

The power supply complies with the following environmental regulation:

Regulation
RoHS

Downloaded from Arrow.com.

6 Certifications

6.1 Safety Certifications

The Arduino USB-C Power Supply (65W) holds the following safety certifications:

Certification	Region	Standard
UL/CUL	USA/Canada	UL62368-1, CSA C22.2
CE	Europe	EN62368
UKCA	United Kingdom	EN62368
FCC	USA	Part 15 Class B

Important note: All certifications are maintained and updated regularly. For the most current certification status, please contact Arduino support or refer to product documentation.

6.2 Declaration of Conformity CE DoC (EU)

English: We declare under our sole responsibility that the products above are in conformity with the essential requirements of the following EU Directives and therefore qualify for free movement within markets comprising the European Union (EU) and European Economic Area (EEA).

French: Nous déclarons sous notre seule responsabilité que les produits indiqués ci-dessus sont conformes aux exigences essentielles des directives de l'Union européenne mentionnées ci-après, et qu'ils remplissent à ce titre les conditions permettant la libre circulation sur les marchés de l'Union européenne (UE) et de l'Espace économique européen (EEE).

6.3 Declaration of Conformity to EU RoHS & REACH

Arduino products are in compliance with Directive 2011/65/EU of the European Parliament and Directive 2015/863/EU of the Council of 4 June 2015 on the restriction of the use of certain hazardous substances in electrical and electronic equipment.

Substance	Maximum Limit (ppm)
Lead (Pb)	1000
Cadmium (Cd)	100
Mercury (Hg)	1000
Hexavalent Chromium (Cr6+)	1000
Poly Brominated Biphenyls (PBB)	1000
Poly Brominated Diphenyl ethers (PBDE)	1000
Bis(2-Ethylhexyl) phthalate (DEHP)	1000
Benzyl butyl phthalate (BBP)	1000
Dibutyl phthalate (DBP)	1000
Diisobutyl phthalate (DIBP)	1000

Downloaded from Arrow.com.

Exemptions: No exemptions are claimed.

Arduino products are fully compliant with the related requirements of European Union Regulation (EC) 1907/2006 concerning the Registration, Evaluation, Authorization and Restriction of Chemicals (REACH). We declare none of the SVHCs (https://echa.europa.eu/web/guest/candidate-list-table), the Candidate List of Substances of Very High Concern for authorization currently released by ECHA, is present in all products (and also package) in quantities totaling in a concentration equal or above 0.1%. To the best of our knowledge, we also declare that our products do not contain any of the substances listed on the "Authorization List" (Annex XIV of the REACH regulations) and Substances of Very High Concern (SVHC) in any significant amounts as specified by the Annex XVII of Candidate list published by ECHA (European Chemical Agency) 1907/2006/EC.

6.4 Conflict Minerals Declaration

As a global supplier of electronic and electrical components, Arduino is aware of our obligations with regards to laws and regulations regarding Conflict Minerals, specifically the Dodd-Frank Wall Street Reform and Consumer Protection Act, Section 1502. Arduino does not directly source or process conflict minerals such as Tin, Tantalum, Tungsten, or Gold. Conflict minerals are contained in our products in the form of solder, or as a component in metal alloys. As part of our reasonable due diligence Arduino has contacted component suppliers within our supply chain to verify their continued compliance with the regulations. Based on the information received thus far we declare that our products contain Conflict Minerals sourced from conflict-free areas.

Downloaded from Arrow.com.

7 FCC Caution

Any changes or modifications not expressly approved by the party responsible for compliance could void the user's authority to operate the equipment.

This device complies with Part 15 of the FCC Rules. Operation is subject to the following two conditions:

(1) This device may not cause harmful interference.

(2) This device must accept any interference received, including interference that may cause undesired operation.

FCC RF Radiation Exposure Statement:

This equipment complies with FCC radiation exposure limits set forth for an uncontrolled environment.

8 Company Information

The power supply is manufactured by the company listed below.

Company name	**Arduino S.r.l.**
Company address	Via Andrea Appiani 25, 20900 Monza (Italy)

9 Related Products

This power supply can be used with the following Arduino products:

- Arduino® UNO™ Q 2GB (SKU: ABX00162)
- Arduino® UNO™ Q 4GB (SKU: ABX00173)
- Arduino® VENTUNO™ Q (SKU: ABX00181)
- Arduino® USB-C Hub (8 in 1) (SKU: TPX00241)

Downloaded from Arrow.com.

10 Reference Documentation

The following table lists additional resources related to this product.

No.	Reference	Link
1	Arduino Store	https://store.arduino.cc/
2	65 W Power Supply Product Page	https://docs.arduino.cc/hardware/usb-c-power-supply-65w/
3	Arduino USB-C Hub (8 in 1)	https://store.arduino.cc/products/usb-c-hub-8-in-1/

11 Document Revision History

Date	Revision	Changes
25/08/2026	1	First release

Downloaded from Arrow.com.