Connector Location A

Connector Location B

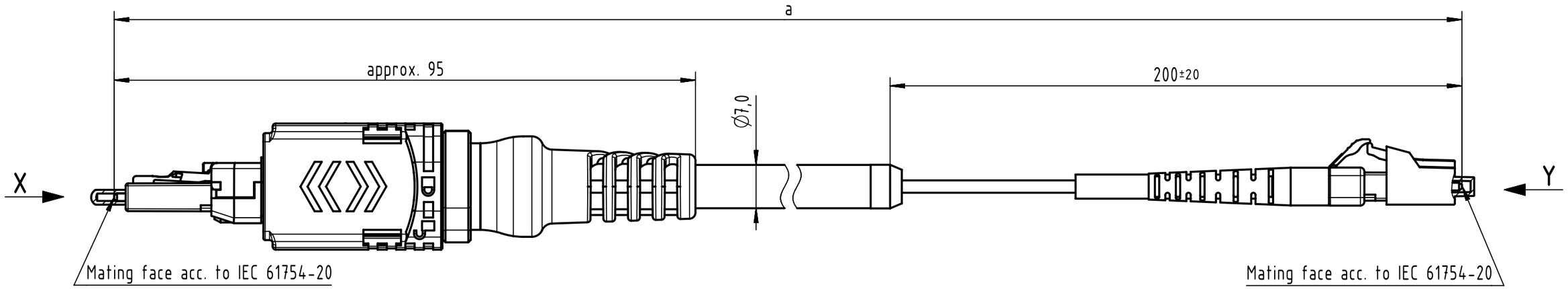

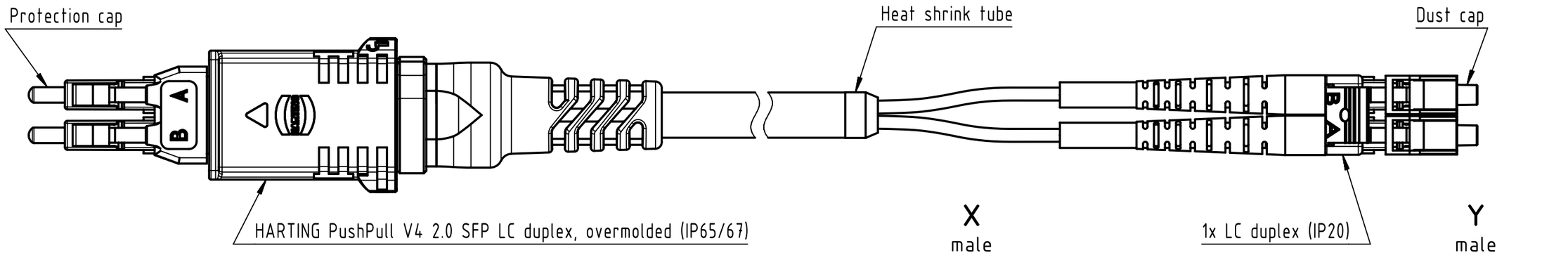

X
male
(without protection cap)

Y
male
(without dust cap)

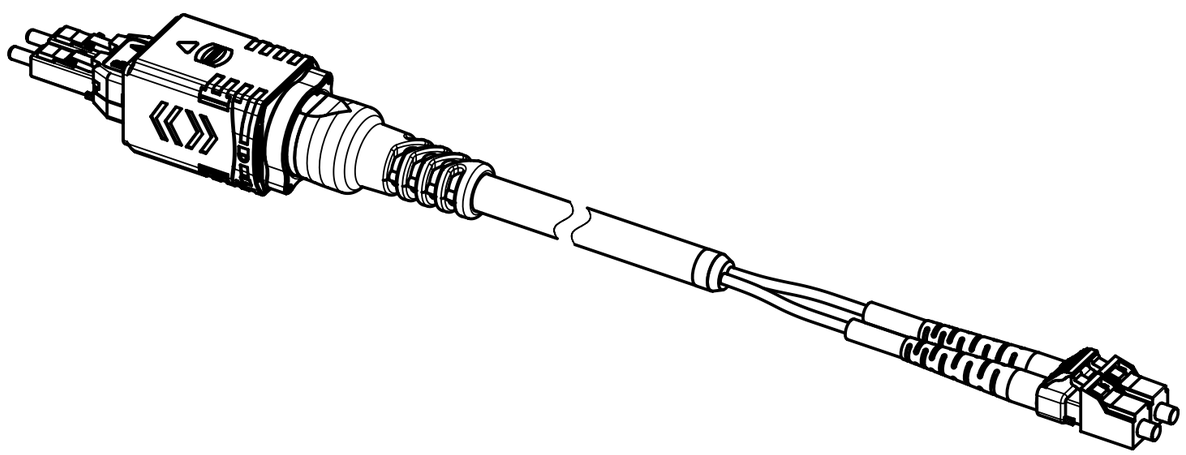

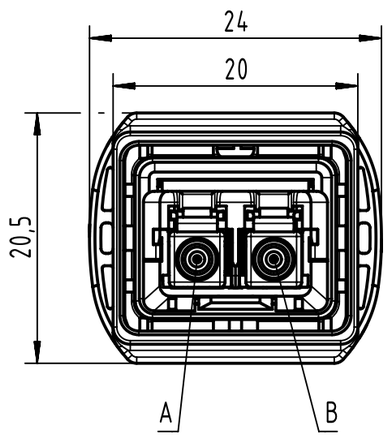

Loading Plan

A	fiber 1	B
B	fiber 2	A

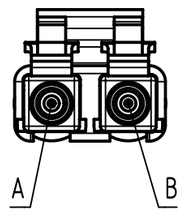

- Temperature range: -40°C ... +85°C

All Dimensions in mm	Tech. Character.	Free size tol.		According to production drawing
All rights reserved	Created by COSTEA Costea	Inspected by 402676 Gross	Standardisation MUNTEANV Muntean	Date 2021-02-23	State Final Release
Department HCS - RO	Title FO CA PP2-LCdx, 62.5µ, OM1, PUR				Doc-Key / ECM-Nr. 100677882/UGD/009/E 500000189720
HARTING Customised Solutions D-32339 Espelkamp	Type TB	Number 3361431XXX0003		Rev. E	Page 1/2

A3

Downloaded from Arrow.com.

Cont. no.	Part no.	Type of cable	Dim. a[m]
27	33614311000003	FO breakout cable, MM, 2-channel, 62.5/125µm, PUR, black	100
26	33614310900003		90
25	33614310800003		80
24	33614310700003		70
23	33614310600003		60
22	33614310500003		50
21	33614310450003		45
20	33614310400003		40
19	33614310350003		35
18	33614310300003		30
17	33614310250003		25
16	33614310200003		20
15	33614310150003		15
14	33614310140003		14
13	33614310130003		13
12	33614310120003		12
11	33614310110003		11
10	33614310100003		10
9	33614310090003		9
8	33614310080003		8
7	33614310070003		7
6	33614310060003		6
5	33614310050003		5
4	33614310040003		4
3	33614310030003		3
2	33614310020003		2
1	33614310010003		1

All Dimensions in mm | Tech. Character. | Free size tol. | According to production drawing

All rights reserved

Department HCS - RO

HARTING Customised Solutions
D-32339 Espelkamp

Created by	Inspected by	Standardisation	Date	State
COSTEA Costea	402676 Gross	MUNTEANV Muntean	2021-02-23	Final Release

Title: FO CA PP2-LCdx, 62.5µ, OM1, PUR

Doc-Key / ECM-Nr.: 100677882/UGD/009/E 500000189720

Type: TB | Number: 3361431XXX0003 | Rev.: E | Page: 2/2

A3

Downloaded from Arrow.com.