SCHRACK FORCE GUIDED RELAY SR6 D/M

FORCE GUIDED RELAYS

INTRODUCTION

TE Connectivity (TE)'s Schrack Force Guided Relay SR6 D/M is engineered for high-reliability applications, incorporating force-guided contacts in accordance with standards. It operates at a rated voltage of 250VAC with a maximum switching voltage of 400VAC, ensuring robust performance in industrial automation and safety systems. The relay features high insulation distances between electrical circuits, enhancing operational safety and reliability. Its coil voltage ranges from 5 to 110 VDC, accommodating diverse operational requirements.

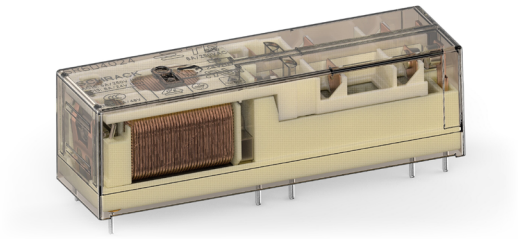

FEATURES

- 4 pole relay with force guided contacts according to EN61810-3 (formerly EN50205)
- High insulation distances between electrical circuits

APPLICATIONS

- Emergency shut-off
- Press control
- Machine control
- Elevator and escalator control
- Safety relays

APPROVALS

- VDE Cert. No. 128935
- UL E214025
- TÜV 968/EL 350

Technical data of approved types on request

Downloaded from Arrow.com.

CONTACT DATA

Contact arrangement	3 form A + 1 form B contacts 3 NO + 1 NC, 2 form A + 2 form B contacts 2 NO + 2 NC
Rated voltage	250VAC
Max. switching voltage	400VAC
Rated current	8A
Contact material	$AgSnO_2$
Contact style	single contact, force guided type A according to EN 50205
Min. recommended contact load	5V, 10mA
Initial contact resistance	≤100mΩ at 1A, 24VDC ≤20Ω at 10mA, 5VDC
Frequency of operation, with/without load.	6/150min^{-1}
Mechanical endurance	10x10^6 operations

CONTACT RATINGS

Contact	Load	Cycles
Contact ratings, IEC 60947-5-1 (VDE and TÜV approved)		
NO (1 form A)	A15 – 250V/ 5A	6,050
NO (1 form A)	DC13 – 24V/6A	6,050

COIL DATA

Coil voltage range	5 to 110 VDC

COIL VERSIONS, DC COIL

Coil code	Rated voltage VDC	Operate voltage VDC	Release voltage VDC	Coil resistance Ω±10% 1)	Rated coil power mW
005	5	3.8	0.5	21	1190
006	6	4.5	0.6	30	1200
009	9	6.8	0.9	68	1191
012	12	9	1.2	120	1200
018	18	13.5	1.8	270	1200
021	21	16	2.1	368	1198
024	24	18	2.4	480	1200
036	36	27	3.6	1080	1200
040	40	30	4.0	1333	1200
048	48	36	4.8	1920	1200
060	60	45	6	3000 1)	1200
110	110	83	11	10080 1)	1200

1) Coil resistance ±12%.
All figures are given for coil without pre-energization, at ambient temperature +23°C.

MAX. DC LOAD BREAKING CAPACITY

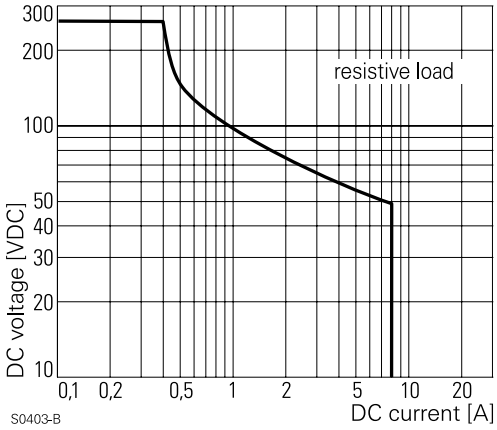

ELECTRICAL ENDURANCE

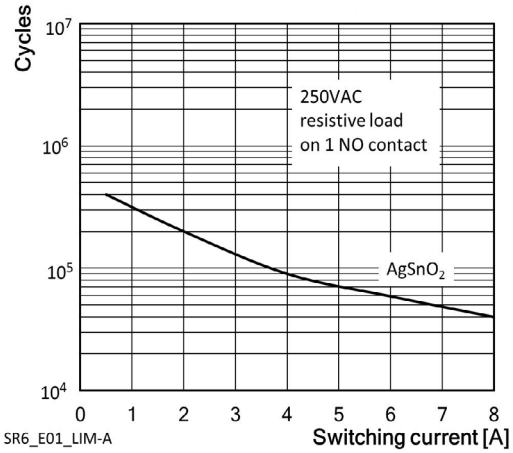

COIL OPERATING RANGE DC

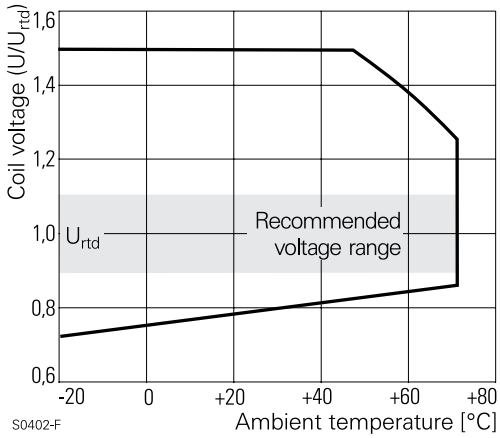

Downloaded from Arrow.com.

INSULATION DATA

Initial dielectric strength	
between open contacts	1500Vrms
between contact and coil	4000Vrms
between adjacent contacts	3000Vrms
in longitudinal direction	4000Vrms
Clearance/creepage	
between open contacts	microdisconnection
between contact and coil	≥5.5/5.5mm
between adjacent contacts	≥5.5/5.5mm
in longitudinal direction	≥15/15mm
Insulation to EN 50178, type of insulation	
between contact and coil	reinforced
between adjacent contacts	reinforced

OTHER DATA

Material compliance	EU RoHS/ELV, China RoHS, REACH, Halogen content refer to the Product Compliance Support Center at **www.te.com/customersupport/rohssupportcenter**
Ambient temperature	-25 to 70°C
Category of environmental protection	
IEC 61810	RTIII [1]
Weight	30 g
Resistance to soldering heat THT	
IEC 60068-2-20	260°C/5s
Packaging/unit	tube/10 pcs.

1) Relay fulfills the standardized IEC 61810 requirements for the category of environmental protection RT III "wash tight". These standardized RT III sealing tests do not include any type of washing process. The customer shall ensure, that their soldering process, cleaning process and potentially used chemicals are not damaging the relay!
For more detailed information see product specification 2158004

DIMENSIONS (Unit: mm)

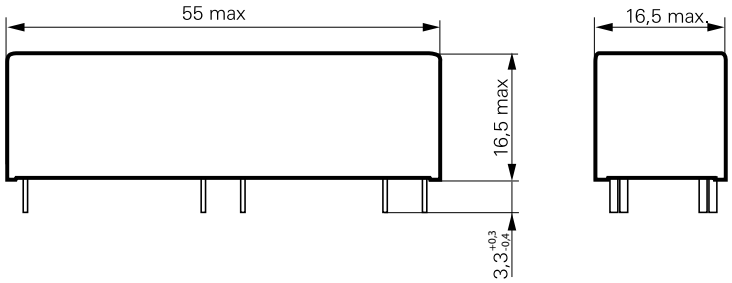

PCB LAYOUT / TERMINAL ASSIGNMENT

Bottom view on solder pins

2 form A + 2 form B, 2 NO + 2 NC contacts

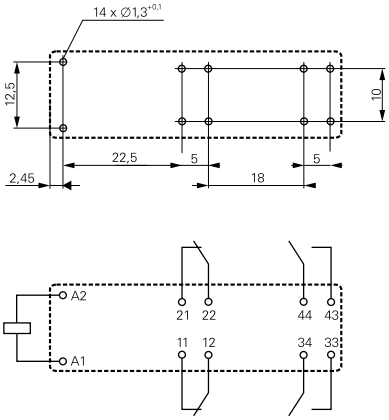

3 form A + 1 form B, 3 NO + 1 NC contacts

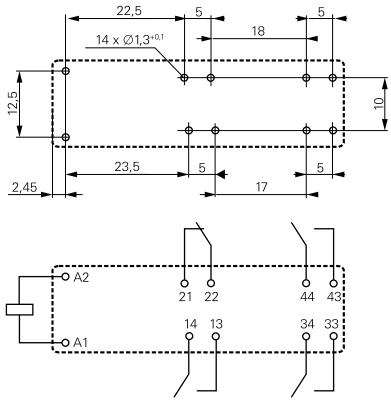

Downloaded from Arrow.com.

PRODUCT CODE STRUCTURE

Part Number

SR6 D 4 012

Type

SR6	Relay with force guided contacts SR6 D/M

Contact arrangement

D	2 form A + 2 form B contacts (2 NO + 2 NC)
M	3 form A + 1 form B contacts (3 NO + 1 NC)

Coil

Coil code	please refer to coil versions table (e.g. 024=24VDC)

Contact material

4	$AgSnO_2$

PRODUCT INFORMATION

Product code	Type	Contact arrangement	Contact material	Coil	TE Part Number
SR6D4012	4 pole relay with force guided contacts	2 form A + 2 form B, 2 NO + 2 NC contacts	$AgSnO_2$	12VDC	1415078-1
SR6D4018				18VDC	7-1415354-1
SR6D4021				21VDC	8-1415353-1
SR6D4024				24VDC	6-1415027-1
SR6D4040				40VDC	9-1415366-1
SR6D4110				110VDC	1415062-1
SR6M4012		3 form A + 1 form B, 3 NO + 1 NC contacts		12VDC	7-1415353-1
SR6M4018				18VDC	1415354-1
SR6M4021				21VDC	6-1415353-1
SR6M4024				24VDC	3-1415353-1
SR6M4110				110VDC	1-1415354-1

This list represents the most common type and does not show all variants covered by this datasheet.
Other types on request

Notes:

1. Datasheets and product specification according to IEC 61810-1 and to be used only together with the 'Definitions' section.
2. Datasheets and product data is subject to the terms of the disclaimer and all chapters of the 'Definitions' section, available at http://relays.te.com/definitions.
3. Datasheets, product data, 'Definitions' section, application notes and all specifications are subject to change.
4. For general information on Force-Guided-Relays and our portfolio, please visit http://www.te.com/fgr.
5. For more detailed product-specific-information (such as B10d values, switching times, etc) please contact our Product Information Center (https://www.te.com/usa-en/customer-support/customer-service.html) and ask for the product-specification.

te.com

©2026 TE Connectivity plc. All Rights Reserved.

SCHRACK, TE, TE Connectivity, TE connectivity (logo) and Every Connection Counts are trademarks owned or licensed by the TE Connectivity plc. family of companies. All other logos, products and/or company names referred to herein might be trademarks of their respective owners.

While TE has made every reasonable effort to ensure the accuracy of the information in this document, TE does not guarantee that it is error-free, nor does TE make any other representation, warranty or guarantee that the information is accurate, correct, reliable or current. TE reserves the right to make any changes to the information contained herein without prior notice. TE Connectivity assumes only those obligations set forth in the terms and conditions for this product and shall in no event be liable for any incidental, indirect, or consequential damages arising out of the sale, resale, use, or misapplication of the product. TE expressly disclaims any implied warranties with respect to the information contained herein, including, but not limited to, implied warranties of merchantability or fitness for a particular purpose. Dimensions, specifications and/or information contained herein are for reference purposes only and are subject to change without notice. Consult TE for the latest dimensions, specifications and/or information. Users of TE Connectivity products must make their own assessment as to whether the respective product is suitable for the respective desired application.

05/26 ED

Downloaded from Arrow.com.