Overview

The KEMET T499 is a high-temperature product that offers optimum performance characteristics in applications with operating temperatures up to 175°C. Advanced materials and testing allow this series to perform with a reliability level of 0.5%/1000 hours at rated voltage and temperature.

T499 AUTO is classified as having moisture sensitivity level (MSL) 1 under J STD 020: unlimited floorlife time at ≤ 30°C/85% RH. T499 AUTO is available in five standard EIA case sizes, with ROHS-compliant terminations as standard.

Benefits

- Meets or exceeds EIA Standard 535BAAC
- Tape & Reel standard packaging per EIA 481
- Symmetrical, compliant terminations
- Optional gold-plated terminations
- Laser-marked case
- 100% surge current testing
- Complies with AEC–Q200
- 100% steady-state accelerated aging
- Voltage derating is 1/2 at 175°C

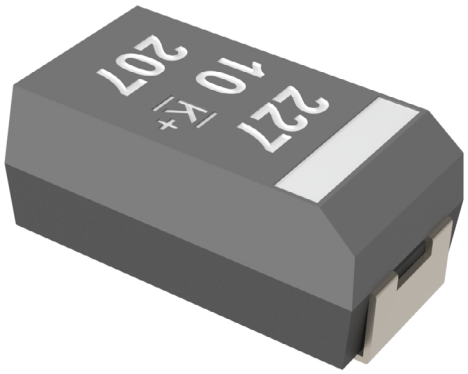

Applications

Typical applications include decoupling and filtering in industrial and automotive end applications, such as DC/DC converters, portable electronics, telecommunications, and control units operating at temperatures up to 175°C.

Environmental Compliance

RoHS compliant (6/6) according to Directive 2002/95/EC when ordered with 100% Sn solder or gold-plated.
- Halogen-free
- Epoxy compliant with UL94 V–0
- Molded Epoxy complies for outgassing testing under ASTM E 595.

Downloaded from Arrow.com.

K-SIM

For a detailed analysis of specific part numbers, please visit ksim.kemet.com to access KEMET's K-SIM software. KEMET K-SIM is designed to simulate behavior of components with respect to frequency, ambient temperature, and DC bias levels.

Ordering Information

T	499	X	227	M	010	A	T	E500	
Capacitor Class	Series	Case Size	Capacitance Code (pF)	Capacitance Tolerance	Rated Voltage (VDC)	Failure Rate/ Design	Termination Finish	ESR	Packaging (C-Spec)
T = Tantalum	High Temperature 175°C	A B C D X	First two digits represent significant figures. Third digit specifies number of zeros.	K = ±10% M = ±20%	006 = 6.3 010 = 10 016 = 16 020 = 20 025 = 25 035 = 35 050 = 50	A = N/A	T = 100% Matte tin (Sn)-plated G = Gold-plated H = Standard solder coated (SnPb 5% Pb minimum)	E = ESR Last three digits specify ESR in mΩ (500 = 500 mΩ)	Blank = 7" reel 7280 = 13" reel 7027 = Moisture barrier bag

Performance Characteristics

Item	Performance Characteristics
Operating Temperature	−55°C to 175°C
Rated Capacitance Range	0.15 – 220 µF at 120 Hz/25°C
Capacitance Tolerance	K tolerance (10%), M tolerance (20%)
Rated Voltage Range	6 – 50 V
DF (120 Hz)	Refer to Part Number Electrical Specification Table
ESR (100 kHz)	Refer to Part Number Electrical Specification Table
Leakage Current	≤ 0.01 CV (µA) at rated voltage after 5 minutes

Downloaded from Arrow.com.

Qualification

Test	Condition		Characteristics			
Endurance	175°C at 1/2 rated voltage, 2,000 hours		Δ C/C	Within ±10% of initial value		
			DF	Within initial limits		
			DCL	Within 1.25 x initial limit		
			ESR	Within initial limits		
Storage Life	175°C at 0 volts, 2,000 hours		Δ C/C	Within ±10% of initial value		
			DF	Within initial limits		
			DCL	Within 1.25 x initial limit		
			ESR	Within initial limits		
Thermal Shock	MIL–STD–202, Method 107, Condition B, mounted, –55°C to 175°C, 1,000 cycles		Δ C/C	Within ±5% of initial value		
			DF	Within initial limits		
			DCL	Within 1.25 x initial limit		
			ESR	Within initial limits		
Temperature Stability	Extreme temperature exposure at a succession of continuous steps at +25°C, –55°C, +25°C, +85°C, +175°C, +25°C		+25°C	–55°C	+85°C	+175°C
		Δ C/C	IL*	±10%	±10%	±30%
		DF	IL	IL	1.5 x IL	1.5 x IL
		DCL	IL	N/A	10 x IL	12 x IL
Surge Voltage	85°C, 1.32 x rated voltage 1,000 cycles (150°C, 1.2 x rated voltage)		Δ C/C	Within ±5% of initial value		
			DF	Within initial limits		
			DCL	Within initial limits		
			ESR	Within initial limits		
Mechanical Shock/ Vibration	MIL–STD–202, Method 213, Figure 1, Condition F, 1,500 G peak MIL–STD–202, Method 214, 5g for 20 minutes/12 cycles each of 3 orientations. Test from 10 to 2,000 Hz		Δ C/C	Within ±10% of initial value		
			DF	Within initial limits		
			DCL	Within initial limits		

**IL = Initial Limit*

Certification

KEMET's Internal Qualification Plan for this Tantalum series of capacitors follows AEC–Q200 guidelines.

Downloaded from Arrow.com.

ESR vs. Frequency

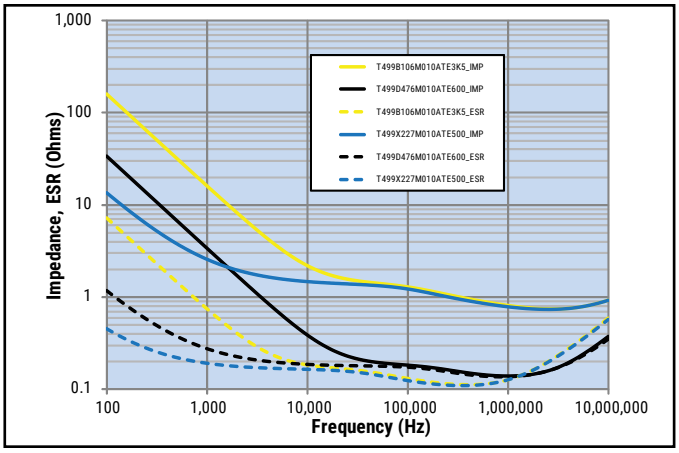

Capacitance vs. Frequency

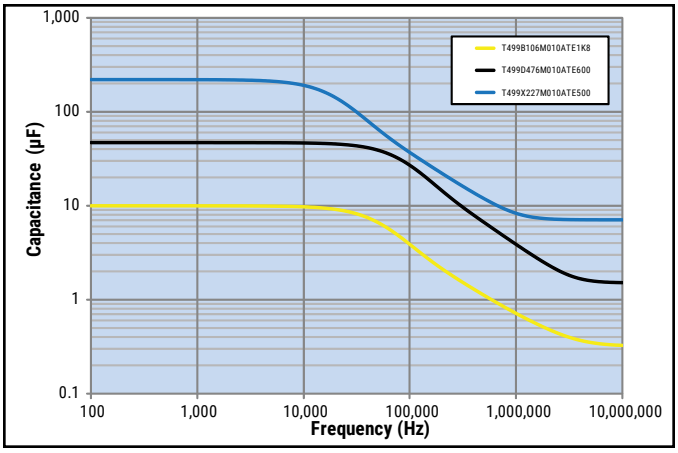

Dimensions – Millimeters (Inches)

Metric will govern

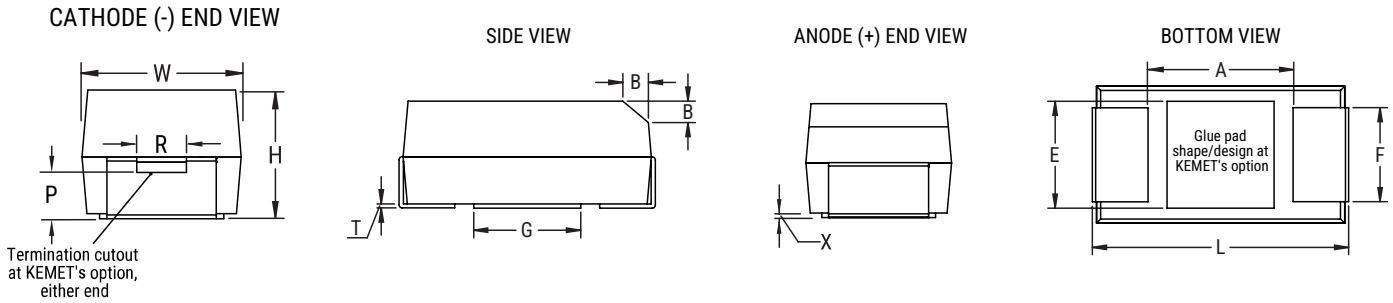

Case Size		Component												
KEMET	EIA	L	W	H	F ±0.1 ±(0.004)	S ±0.3 ±(0.012)	B ±0.15(Ref) ±0.006	X (Ref)	P (Ref)	R (Ref)	T (Ref)	A (Min)	G (Ref)	E (Ref)
A	3216–18	3.2±0.2 (0.126±0.008)	1.6±0.2 (0.063±0.008)	1.6±0.2 (0.063±0.008)	1.2 (0.047)	0.8 (0.031)	0.4 (0.016)	0.10±0.10 (0.004±0.004)	0.4 (0.016)	0.4 (0.016)	0.13 (0.005)	1.2 (0.047)	1.1 (0.043)	1.3 (0.051)
B	3528–21	3.5±0.2 (0.138±0.008)	2.8±0.2 (0.110±0.008)	1.9±0.2 (0.075±0.008)	2.2 (0.087)	0.8 (0.031)	0.4 (0.016)	0.10±0.10 (0.004±0.004)	0.5 (0.020)	1.0 (0.039)	0.13 (0.005)	1.9 (0.075)	1.8 (0.071)	2.2 (0.087)
C	6032–28	6.0±0.3 (0.236±0.012)	3.2±0.3 (0.126±0.012)	2.5±0.3 (0.098±0.012)	2.2 (0.087)	1.3 (0.051)	0.5 (0.020)	0.10±0.10 (0.004±0.004)	0.9 (0.035)	1.0 (0.039)	0.13 (0.005)	3.1 (0.122)	2.8 (0.110)	2.4 (0.094)
D	7343–31	7.3±0.3 (0.287±0.012)	4.3±0.3 (0.169±0.012)	2.8±0.3 (0.110±0.012)	2.4 (0.094)	1.3 (0.051)	0.5 (0.020)	0.10±0.10 (0.004±0.004)	0.9 (0.035)	1.0 (0.039)	0.13 (0.005)	3.8 (0.150)	3.5 (0.138)	3.5 (0.138)
X	7343–43	7.3±0.3 (0.287±0.012)	4.3±0.3 (0.169±0.012)	4.0±0.3 (0.157±0.012)	2.4 (0.094)	1.3 (0.051)	0.5 (0.020)	0.10±0.10 (0.004±0.004)	1.7 (0.067)	1.0 (0.039)	0.13 (0.005)	3.8 (0.150)	3.5 (0.138)	3.5 (0.138)

Notes: (Ref) – Dimensions provided for reference only.

Downloaded from Arrow.com.

Table 1 – Ratings & Part Number Reference

Rated Voltage	Rated Cap	Case Code/ Case Size	KEMET Part Number	DC Leakage	DF	ESR	Maximum Allowable Ripple Current (rms)			Maximum Operating Temp	MSL
VDC at 85°C	µF	KEMET/EIA	(See below for part options)	µA at +25°C Max/5 Min	% at +25°C 120 Hz Max	mΩ at +25°C 100 kHz Max	mA at +25°C 100 kHz	mA at +85°C 100 kHz	mA at +125°C 100 kHz	°C	Reflow Temp ≤ 260°C
6.3	4.7	A/3216-18	T499A475(1)006A(2)E6K0	0.5	6	6,000	112	101	45	175	1
6.3	6.8	B/3528-21	T499B685(1)006A(2)E3K5	0.5	6	3500	156	140.4	62.4	175	1
6.3	10	B/3528-21	T499B106(1)006A(2)E3K5	0.6	6	3,500	156	140	62	175	1
6.3	15	B/3528-21	T499B156(1)006A(2)E3K5	0.9	6	3,500	156	140	62	175	1
6.3	22	B/3528-21	T499B226(1)006A(2)E3K5	1.4	6	3,500	156	140	62	175	1
6.3	22	C/6032-28	T499C226(1)006A(2)E1K8	1.4	6	1,800	247	222	99	175	1
6.3	33	B/3528-21	T499B336(1)006A(2)E3K0	2.1	6	3,000	168	151	67	175	1
6.3	33	C/6032-28	T499C336(1)006A(2)E1K8	2.1	6	1,800	247	222	99	175	1
6.3	47	C/6032-28	T499C476(1)006A(2)E1K8	3.0	6	1,800	247	222	99	175	1
6.3	47	D/7343-31	T499D476(1)006A(2)E800	3.0	6	800	433	390	173	175	1
6.3	68	C/6032-28	T499C686(1)006A(2)E1K2	4.3	6	1,200	303	273	121	175	1
6.3	100	D/7343-31	T499D107(1)006A(2)E800	6.3	8	800	433	390	173	175	1
6.3	150	D/7343-31	T499D157(1)006A(2)E700	9.5	8	700	463	417	185	175	1
10	1.5	A/3216-18	T499A155(1)010A(2)E8K0	0.5	6	8,000	97	87	39	175	1
10	2.2	A/3216-18	T499A225(1)010A(2)E8K0	0.5	6	8,000	97	87	39	175	1
10	3.3	A/3216-18	T499A335(1)010A(2)E6K0	0.5	6	6,000	112	101	45	175	1
10	4.7	A/3216-18	T499A475(1)010A(2)E6K0	0.5	6	6,000	112	101	45	175	1
10	4.7	B/3528-21	T499B475(1)010A(2)E3K5	0.5	6	3,500	156	140	62	175	1
10	6.8	A/3216-18	T499A685(1)010A(2)E6K0	0.7	6	6,000	112	101	45	175	1
10	6.8	B/3528-21	T499B685(1)010A(2)E3K5	0.7	6	3,500	156	140	62	175	1
10	10	B/3528-21	T499B106(1)010A(2)E3K5	1.0	6	3,500	156	140	62	175	1
10	10	C/6032-28	T499C106(1)010A(2)E1K8	1.0	6	1,800	247	222	99	175	1
10	15	B/3528-21	T499B156(1)010A(2)E3K5	1.5	6	3,500	156	140	62	175	1
10	15	C/6032-28	T499C156(1)010A(2)E1K8	1.5	6	1,800	247	222	99	175	1
10	22	B/3528-21	T499B226(1)010A(2)E3K0	2.2	6	3,000	168	151	67	175	1
10	22	C/6032-28	T499C226(1)010A(2)E1K8	2.2	6	1,800	247	222	99	175	1
10	33	C/6032-28	T499C336(1)010A(2)E1K8	3.3	6	1,800	247	222	99	175	1
10	33	D/7343-31	T499D336(1)010A(2)E1K6	3.3	6	1,600	306	275	122	175	1
10	47	D/7343-31	T499D476(1)010A(2)E800	4.7	6	800	433	390	173	175	1
10	68	D/7343-31	T499D686(1)010A(2)E800	6.8	6	800	433	390	173	175	1
10	100	D/7343-31	T499D107(1)010A(2)E700	10.0	8	700	463	417	185	175	1
10	220	X/7343-43	T499X227(1)010A(2)E500	22.0	8	500	574	517	230	175	1
16	1	A/3216-18	T499A105(1)016A(2)E10K	0.5	4	10,000	87	78	35	175	1
16	1.5	A/3216-18	T499A155(1)016A(2)E8K0	0.5	6	8,000	97	87	39	175	1
16	2.2	A/3216-18	T499A225(1)016A(2)E6K0	0.5	6	6,000	112	101	45	175	1
16	3.3	A/3216-18	T499A335(1)016A(2)E6K0	0.5	6	6,000	112	101	45	175	1
16	3.3	B/3528-21	T499B335(1)016A(2)E3K5	0.5	6	3,500	156	140	62	175	1
16	4.7	B/3528-21	T499B475(1)016A(2)E6K0	0.8	6	6,000	119	107	48	175	1
16	6.8	A/3216-18	T499A685(1)016A(2)E7K0	1.1	6	7,000	104	94	42	175	1
16	6.8	B/3528-21	T499B685(1)016A(2)E3K5	1.1	6	3,500	156	140	62	175	1
16	6.8	C/6032-28	T499C685(1)016A(2)E1K8	1.1	6	1,800	247	222	99	175	1
16	10	B/3528-21	T499B106(1)016A(2)E3K5	1.6	6	3,500	156	140	62	175	1
16	10	C/6032-28	T499C106(1)016A(2)E1K8	1.6	6	1,800	247	222	99	175	1
16	15	C/6032-28	T499C156(1)016A(2)E1K8	2.4	6	1,800	247	222	99	175	1
16	22	C/6032-28	T499C226(1)016A(2)E1K6	3.5	6	1,600	262	236	105	175	1
16	22	D/7343-31	T499D226(1)016A(2)E800	3.5	6	800	433	390	173	175	1
16	33	D/7343-31	T499D336(1)016A(2)E800	5.3	6	800	433	390	173	175	1
VDC at 85°C	µF	KEMET/EIA	(See below for part options)	µA at +25°C Max/5 Min	% at +25°C 120 Hz Max	mΩ at +25°C 100 kHz Max	mA at +25°C 100 kHz	mA at +85°C 100 kHz	mA at +125°C 100 kHz	°C	Reflow Temp ≤ 260°C
Rated Voltage	Rated Cap	Case Code/ Case Size	KEMET Part Number	DC Leakage	DF	ESR	Maximum Allowable Ripple Current (rms)			Maximum Operating Temp	MSL

(1) To complete KEMET part number, insert M for ±20% or K for ±10%. Designates Capacitance tolerance.
(2) To complete KEMET part number, insert T = 100% Matte Tin (Sn) Plated, G = Gold Plated, H = Standard Solder coated (SnPb 5% Pb minimum). Designates Termination Finish.
Refer to Ordering Information for additional detail.
Higher voltage ratings and tighter tolerance product including ESR may be substituted within the same size at KEMET's option. Voltage substitution will be marked with the higher voltage rating. Substitutions can include better than series.

Downloaded from Arrow.com.

Table 1 – Ratings & Part Number Reference cont.

Rated Voltage	Rated Cap	Case Code/ Case Size	KEMET Part Number	DC Leakage	DF	ESR	Maximum Allowable Ripple Current (rms)			Maximum Operating Temp	MSL
VDC at 85°C	µF	KEMET/EIA	(See below for part options)	µA at +25°C Max/5 Min	% at +25°C 120 Hz Max	mΩ at +25°C 100 kHz Max	mA at +25°C 100 kHz	mA at +85°C 100 kHz	mA at +125°C 100 kHz	°C	Reflow Temp ≤ 260°C
16	47	D/7343-31	T499D476(1)016A(2)E800	7.5	6	800	433	390	173	175	1
16	100	X/7343-43	T499X107(1)016A(2)E300	16.0	6	300	742	668	297	175	1
20	0.68	A/3216-18	T499A684(1)020A(2)E12K	0.5	4	12,000	79	71	32	175	1
20	1	A/3216-18	T499A105(1)020A(2)E10K	0.5	4	10,000	87	78	35	175	1
20	1.5	A/3216-18	T499A155(1)020A(2)E8K0	0.5	6	8,000	97	87	39	175	1
20	2.2	B/3528-21	T499B225(1)020A(2)E3K5	0.5	6	3,500	156	140	62	175	1
20	3.3	B/3528-21	T499B335(1)020A(2)E3K5	0.7	6	3,500	156	140	62	175	1
20	4.7	B/3528-21	T499B475(1)020A(2)E3K5	0.9	6	3,500	156	140	62	175	1
20	4.7	C/6032-28	T499C475(1)020A(2)E2K4	0.9	6	2,400	214	193	86	175	1
20	6.8	C/6032-28	T499C685(1)020A(2)E1K9	1.4	6	1,900	241	217	96	175	1
20	10	C/6032-28	T499C106(1)020A(2)E1K8	2.0	6	1,800	247	222	99	175	1
20	15	C/6032-28	T499C156(1)020A(2)E1K7	3.0	6	1,700	254	229	102	175	1
20	15	D/7343-31	T499D156(1)020A(2)E1K0	3.0	6	1,000	387	348	155	175	1
20	22	D/7343-31	T499D226(1)020A(2)E800	4.4	6	800	433	390	173	175	1
25	0.47	A/3216-18	T499A474(1)025A(2)E14K	0.5	4	14,000	73	66	29	175	1
25	0.68	A/3216-18	T499A684(1)025A(2)E10K	0.5	4	10,000	87	78	35	175	1
25	1	A/3216-18	T499A105(1)025A(2)E8K0	0.5	4	8,000	97	87	39	175	1
25	1.5	A/3216-18	T499A155(1)025A(2)E5K0	0.5	6	5,000	122	110	49	175	1
25	2.2	B/3528-21	T499B225(1)025A(2)E4K5	0.6	6	4,500	137	123	55	175	1
25	3.3	C/6032-28	T499C335(1)025A(2)E2K5	0.8	6	2,500	210	189	84	175	1
25	4.7	C/6032-28	T499C475(1)025A(2)E2K4	1.2	6	2,400	214	193	86	175	1
25	6.8	C/6032-28	T499C685(1)025A(2)E1K9	1.7	6	1,900	241	217	96	175	1
25	6.8	D/7343-31	T499D685(1)025A(2)E1K1	1.7	6	1,100	369	332	148	175	1
25	10	C/6032-28	T499C106(1)025A(2)E1K5	2.5	6	1,500	271	244	108	175	1
25	10	D/7343-31	T499D106(1)025A(2)E1K0	2.5	6	1,000	387	348	155	175	1
25	15	D/7343-31	T499D156(1)025A(2)E1K0	3.8	6	1,000	387	348	155	175	1
25	22	D/7343-31	T499D226(1)025A(2)E800	5.5	6	800	433	390	173	175	1
25	33	D/7343-31	T499D336(1)025A(2)E700	8.3	6	700	463	417	185	175	1
35	0.15	A/3216-18	T499A154(1)035A(2)E19K	0.5	4	19,000	63	57	25	175	1
35	0.22	A/3216-18	T499A224(1)035A(2)E18K	0.5	4	18,000	65	59	26	175	1
35	0.33	A/3216-18	T499A334(1)035A(2)E15K	0.5	4	15,000	71	64	28	175	1
35	0.47	B/3528-21	T499B474(1)035A(2)E8K0	0.5	4	8,000	103	93	41	175	1
35	0.68	B/3528-21	T499B684(1)035A(2)E6K5	0.5	4	6,000	119	107	48	175	1
35	1	A/3216-18	T499A105(1)035A(2)E10K	0.5	4	10,000	87	78	35	175	1
35	1	B/3528-21	T499B105(1)035A(2)E5K0	0.5	4	5,000	130	117	52	175	1
35	1.5	C/6032-28	T499C155(1)035A(2)E4K5	0.5	6	4,500	156	140	62	175	1
35	2.2	C/6032-28	T499C225(1)035A(2)E3K5	0.8	6	3,500	177	159	71	175	1
35	3.3	C/6032-28	T499C335(1)035A(2)E2K5	1.2	6	2,500	210	189	84	175	1
35	4.7	C/6032-28	T499C475(1)035A(2)E2K5	1.6	6	2,500	210	189	84	175	1
35	4.7	D/7343-31	T499D475(1)035A(2)E1K5	1.6	6	1,500	316	284	126	175	1
35	4.7	D/7343-31	T499D475(1)035A(2)E1K0	1.6	6	1,000	387	348	155	175	1
35	4.7	D/7343-31	T499D475(1)035A(2)E900	1.6	6	900	408	367	163	175	1
35	6.8	D/7343-31	T499D685(1)035A(2)E1K3	2.4	6	1,300	340	306	136	175	1
35	10	D/7343-31	T499D106(1)035A(2)E1K0	3.5	6	1,000	387	348	155	175	1
35	22	X/7343-43	T499X226(1)035A(2)E700	7.7	6	700	486	437	194	175	1
35	33	X/7343-43	T499X336(1)035A(2)E600	11.6	6	600	524	472	210	175	1
50	3.3	D/7343-31	T499D335(1)050A(2)E2K0	1.7	6	2,000	274	247	110	175	1
50	4.7	D/7343-31	T499D475(1)050A(2)E900	2.4	4.5	900	408	367	163	175	1
50	10	D/7343-31	T499D106(1)050A(2)E1K0	5.0	6	1,000	387	348	155	175	1
VDC at 85°C	µF	KEMET/EIA	(See below for part options)	µA at +25°C Max/5 Min	% at +25°C 120 Hz Max	mΩ at +25°C 100 kHz Max	mA at +25°C 100 kHz	mA at +85°C 100 kHz	mA at +125°C 100 kHz	°C	Reflow Temp ≤ 260°C
Rated Voltage	Rated Cap	Case Code/ Case Size	KEMET Part Number	DC Leakage	DF	ESR	Maximum Allowable Ripple Current (rms)			Maximum Operating Temp	MSL

(1) To complete KEMET part number, insert M for ±20% or K for ±10%. Designates Capacitance tolerance.
(2) To complete KEMET part number, insert T = 100% Matte Tin (Sn) Plated, G = Gold Plated, H = Standard Solder coated (SnPb 5% Pb minimum). Designates Termination Finish.
Refer to Ordering Information for additional detail.
Higher voltage ratings and tighter tolerance product including ESR may be substituted within the same size at KEMET's option. Voltage substitution will be marked with the higher voltage rating. Substitutions can include better than series.

Downloaded from Arrow.com.

Recommended Voltage Derating Guidelines

Rated Voltage	Working Voltage		Recommended Application Voltage (for maximum reliability)	
	85°C	175°C	85°C	175°C
6.3	6.3	3.15	3.15	1.58
10	10	5.00	5	2.50
16	16	8.00	8	4.00
20	20	10.00	10	5.00
25	25	12.50	12.5	6.25
35	35	17.50	17.5	8.75
50	50	25.00	25	12.50

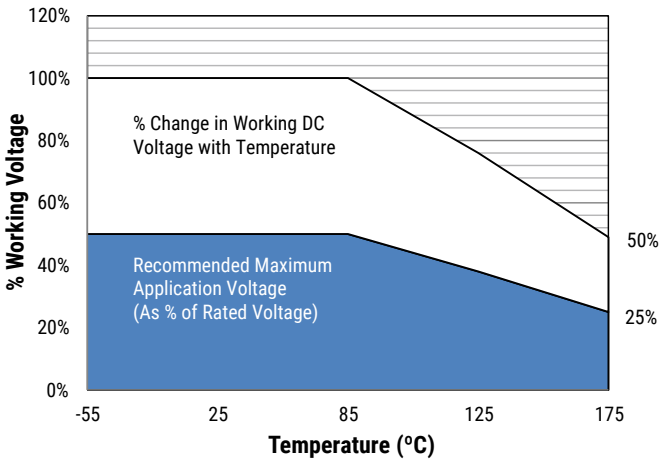

Ripple Current/Ripple Voltage

Permissible AC ripple voltage and current are related to equivalent series resistance (ESR) and the power dissipation capabilities of the device. Permissible AC ripple voltage which may be applied is limited by two criteria:

1. The positive peak AC voltage plus the DC bias voltage, if any, must not exceed the DC voltage rating of the capacitor.
2. The negative peak AC voltage in combination with bias voltage, if any, must not exceed the allowable limits specified for reverse voltage. See the Reverse Voltage section for allowable limits.

The maximum power dissipation by case size can be determined using the table at right. The maximum power dissipation rating stated in the table must be reduced with increasing environmental operating temperatures. Refer to the table below for temperature compensation requirements.

KEMET Series and Case Code	EIA Case Code	Maximum Power Dissipation (P max) mWatts at 25°C with +20°C Rise
A	3216–18	75
B	3528–21	85
C	6032–28	110
D	7343–31	150
X	7343–43	165
E	7360–38	200
S	3216–12	60
T	3528–12	70
U	6032–15	90
V	7343–20	125
T510X	7343–43	270
T510E	7360–38	285

Temperature Compensation Multipliers for Maximum Ripple Current			
T ≤ 25°C	T ≤ 85°C	T ≤ 125°C	T ≤ 175°C
1.00	0.90	0.40	0.20

T= Environmental Temperature

The maximum power dissipation rating must be reduced with increasing environmental operating temperatures. Refer to the Temperature Compensation Multiplier table for details.

Using the P max of the device, the maximum allowable rms ripple current or voltage may be determined.

$I(max) = \sqrt{P\ max/R}$
$E(max) = Z\sqrt{P\ max/R}$

I = rms ripple current (amperes)
E = rms ripple voltage (volts)
P max = maximum power dissipation (watts)
R = ESR at specified frequency (ohms)
Z = Impedance at specified frequency (ohms)

Downloaded from Arrow.com.

Reverse Voltage

Solid tantalum capacitors are polar devices and may be permanently damaged or destroyed if connected with the wrong polarity. The positive terminal is identified on the capacitor body by a stripe plus in some cases a beveled edge. A small degree of transient reverse voltage is permissible for short periods per the table. The capacitors should not be operated continuously in reverse mode, even within these limits.

Temperature	Permissible Transient Reverse Voltage
25°C	15% of Rated Voltage
85°C	5% of Rated Voltage
125°C	1% of Rated Voltage

Table 2 – Land Dimensions/Courtyard

KEMET	Metric Size Code	Density Level A: Maximum (Most) Land Protrusion (mm)					Density Level B: Median (Nominal) Land Protrusion (mm)					Density Level C: Minimum (Least) Land Protrusion (mm)				
Case	EIA	W	L	S	V1	V2	W	L	S	V1	V2	W	L	S	V1	V2
A	3216–18	1.35	2.20	0.62	6.02	2.80	1.23	1.80	0.82	4.92	2.30	1.13	1.42	0.98	4.06	2.04
B	3528–21	2.35	2.21	0.92	6.32	4.00	2.23	1.80	1.12	5.22	3.50	2.13	1.42	1.28	4.36	3.24
C	6032–28	2.35	2.77	2.37	8.92	4.50	2.23	2.37	2.57	7.82	4.00	2.13	1.99	2.73	6.96	3.74
D	7343–31	2.55	2.77	3.67	10.22	5.60	2.43	2.37	3.87	9.12	5.10	2.33	1.99	4.03	8.26	4.84
X[1]	7343–43	2.55	2.77	3.67	10.22	5.60	2.43	2.37	3.87	9.12	5.10	2.33	1.99	4.03	8.26	4.84

Density Level A: *For low-density product applications. Recommended for wave solder applications and provides a wider process window for reflow solder processes.*
Density Level B: *For products with a moderate level of component density. Provides a robust solder attachment condition for reflow solder processes.*
Density Level C: *For high component density product applications. Before adapting the minimum land pattern variations the user should perform qualification testing based on the conditions outlined in IPC standard 7351 (IPC–7351).*

[1] Height of these chips may create problems in wave soldering.
[2] Land pattern geometry is too small for silkscreen outline.

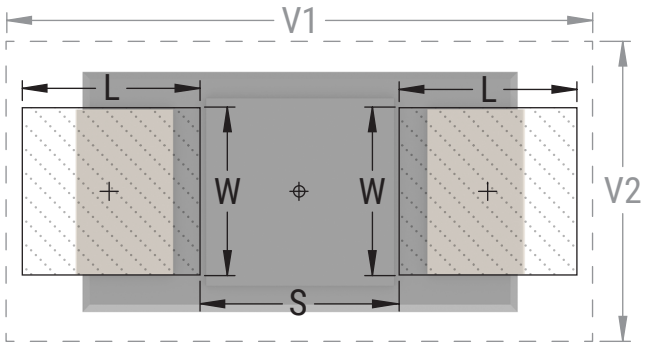

Grid Placement Courtyard

Downloaded from Arrow.com.

Soldering Process

The KEMET families of surface mount capacitors are compatible with wave (single or dual), convection, IR, or vapor phase reflow techniques. Preheating of these components is recommended to avoid extreme thermal stress. KEMET's recommended profile conditions for convection and IR reflow reflect the profile conditions of the IPC/J–STD–020D standard for moisture sensitivity testing. The devices can safely withstand a maximum of three reflow passes at these conditions.

Please note that although the X/7343–43 case size can withstand wave soldering, the tall profile (4.3 mm maximum) dictates care in wave process development.

Hand soldering should be performed with care due to the difficulty in process control. If performed, care should be taken to avoid contact of the soldering iron to the molded case. The iron should be used to heat the solder pad, applying solder between the pad and the termination, until reflow occurs. Once reflow occurs, the iron should be removed immediately. “Wiping” the edges of a chip and heating the top surface is not recommended.

During typical reflow operations, a slight darkening of the gold-colored epoxy may be observed. This slight darkening is normal and not harmful to the product. Marking permanency is not affected by this change.

Profile Feature	SnPb Assembly	Pb-Free Assembly
Preheat/Soak		
Temperature Minimum (T_{Smin})	100°C	150°C
Temperature Maximum (T_{Smax})	150°C	200°C
Time (t_s) from T_{smin} to T_{smax})	60 – 120 seconds	60 – 120 seconds
Ramp-up Rate (T_L to T_P)	3°C/second maximum	3°C/second maximum
Liquidous Temperature (T_L)	183°C	217°C
Time Above Liquidous (t_L)	60 – 150 seconds	60 – 150 seconds
Peak Temperature (T_P)	220°C* 235°C**	250°C* 260°C**
Time within 5°C of Maximum Peak Temperature (t_P)	20 seconds maximum	30 seconds maximum
Ramp-down Rate (T_P to T_L)	6°C/second maximum	6°C/second maximum
Time 25°C to Peak Temperature	6 minutes maximum	8 minutes maximum

Note: All temperatures refer to the center of the package, measured on the package body surface that is facing up during assembly reflow.
** For Case Size height > 2.5 mm*
*** For Case Size height ≤ 2.5 mm*

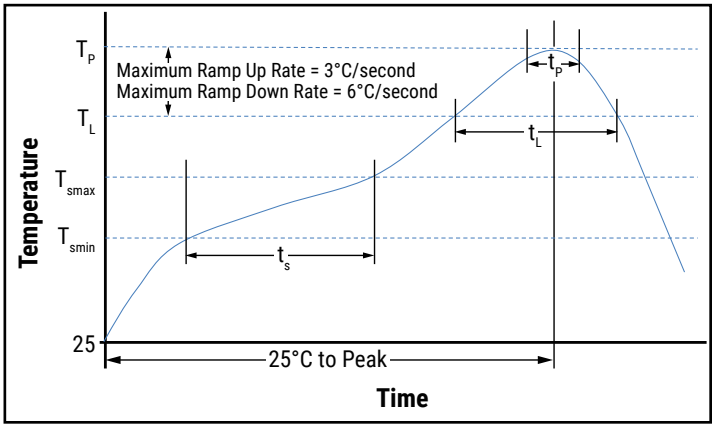

Storage

Tantalum chip capacitors should be stored in normal working environments. While the chips themselves are quite robust in other environments, solderability will be degraded by exposure to high temperatures, high humidity, corrosive atmospheres, and long term storage. In addition, packaging materials will be degraded by high temperature – reels may soften or warp and tape peel force may increase. KEMET recommends that maximum storage temperature not exceed 40°C and maximum storage humidity not exceed 60% relative humidity. Temperature fluctuations should be minimized to avoid condensation on the parts and atmospheres should be free of chlorine and sulphur bearing compounds. For optimized solderability, chip stock should be used promptly, preferably within three years of receipt.

Downloaded from Arrow.com.

Construction

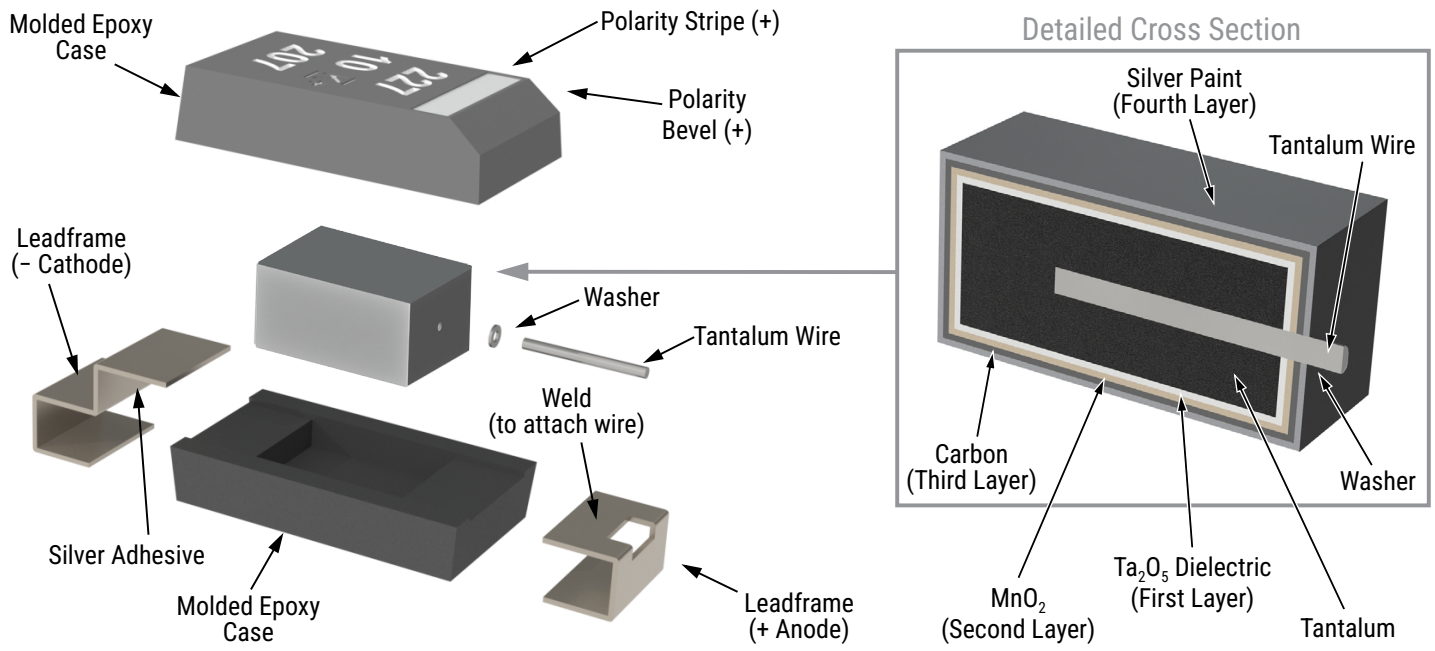

Capacitor Marking

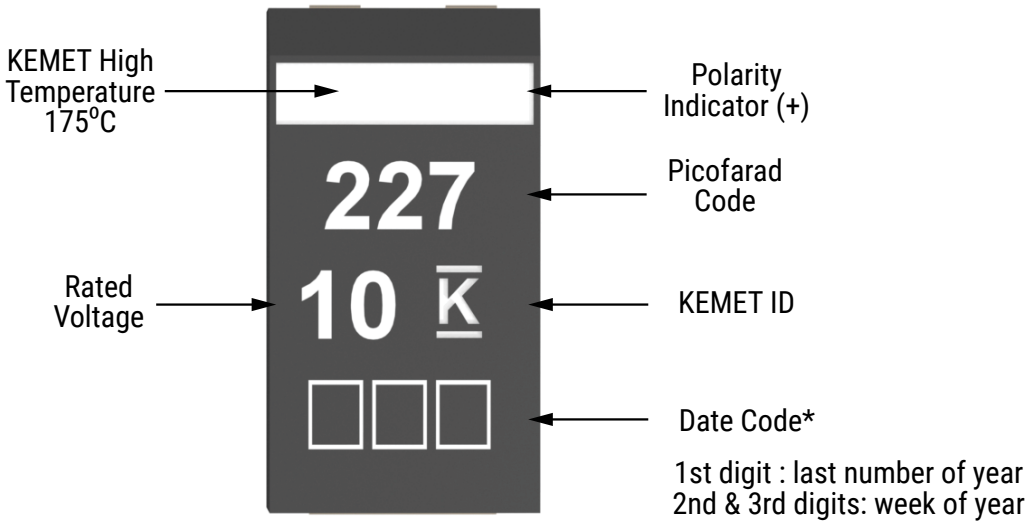

Downloaded from Arrow.com.

Tape & Reel Packaging Information

KEMET's molded chip capacitor families are packaged in 8 and 12 mm plastic tape on 7" and 13" reels in accordance with *EIA Standard 481*: Embossed Carrier Taping of Surface Mount Components for Automatic Handling. This packaging system is compatible with all tape-fed automatic pick-and-place systems.

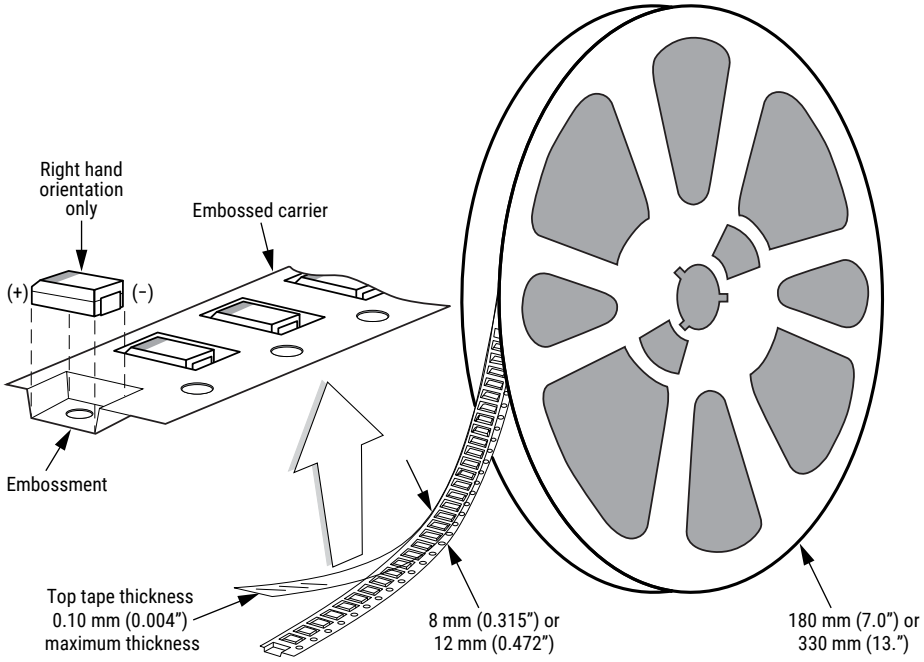

Table 3 – Packaging Quantity

Case Code		Tape Width (mm)	7" Reel*	13" Reel*
KEMET	EIA			
S	3216-12	8	2,500	10,000
T	3528-12	8	2,500	10,000
M	3528-15	8	2,500	8,000
U	6032-15	12	1,000	5,000
L	6032-19	12	1,000	3,000
W	7343-15	12	1,000	3,000
Z	7343-17	12	1,000	3,000
V	7343-20	12	1,000	3,000
A	3216-18	8	2,000	9,000
B	3528-21	8	2,000	8,000
C	6032-28	12	500	3,000
D	7343-31	12	500	2,500
Q	7343-12	12	1,000	3,000
Y	7343-40	12	500	2,000
X	7343-43	12	500	2,000
E/T428P	7360-38	12	500	2,000
H	7360-20	12	1,000	2,500
O	7360-43	12	250	1,000

** No C-Spec required for 7" reel packaging. C-7280 required for 13" reel packaging.*

Downloaded from Arrow.com.

Figure 1 – Embossed (Plastic) Carrier Tape Dimensions

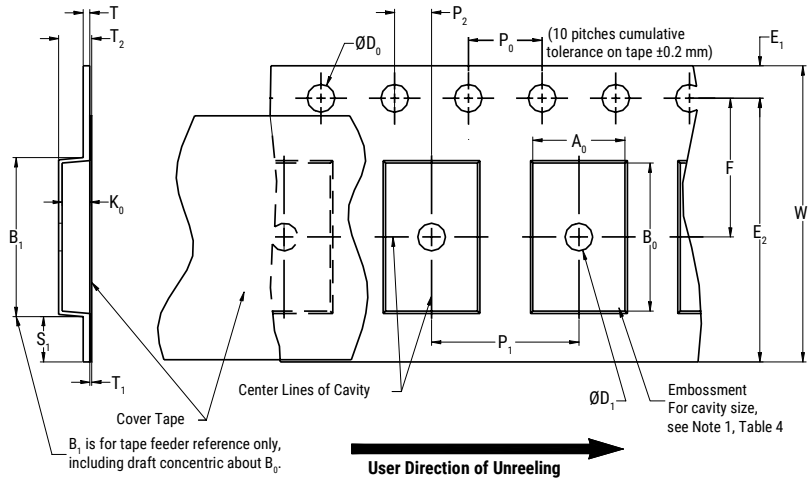

Table 4 – Embossed (Plastic) Carrier Tape Dimensions

Metric will govern

Constant Dimensions — Millimeters (Inches)									
Tape Size	D_0	D_1 Minimum Note 1	E_1	P_0	P_2	R Reference Note 2	S_1 Minimum Note 3	T Maximum	T_1 Maximum
8 mm	1.5 +0.10/−0.0 (0.059 +0.004/−0.0)	1.0 (0.039)	1.75 ±0.10 (0.069 ±0.004)	4.0 ±0.10 (0.157 ±0.004)	2.0 ±0.05 (0.079 ±0.002)	25.0 (0.984)	0.600 (0.024)	0.600 (0.024)	0.100 (0.004)
12 mm		1.5 (0.059)				30 (1.181)			

Variable Dimensions — Millimeters (Inches)								
Tape Size	Pitch	B_1 Maximum Note 4	E_2 Minimum	F	P_1	T_2 Maximum	W Maximum	A_0, B_0 & K_0
8 mm	Single (4 mm)	4.35 (0.171)	6.25 (0.246)	3.5 ±0.05 (0.138 ±0.002)	4.0 ±0.10 (0.157 ±0.004)	2.5 (0.098)	8.3 (0.327)	Note 5
12 mm	Single (4 mm) and Double (8 mm)	8.2 (0.323)	10.25 (0.404)	5.5 ±0.05 (0.217 ±0.002)	4.0 ±0.10 (0.157 ±0.004) or 8.0 ±0.10 (0.315 ±0.004)	4.6 (0.181)	12.3 (0.484)	

1. *The embossment hole location shall be measured from the sprocket hole controlling the location of the embossment. Dimensions of embossment location and hole location shall be applied independent of each other.*
2. *The tape, with or without components, shall pass around R without damage (see Figure 4).*
3. *If S_1 < 1.0 mm, there may not be enough area for cover tape to be properly applied (see EIA Standard 481–D, paragraph 4.3, section b).*
4. *B_1 dimension is a reference dimension for tape feeder clearance only.*
5. *The cavity defined by A_0, B_0 and K_0 shall surround the component with sufficient clearance that:*
   (a) the component does not protrude above the top surface of the carrier tape.
   (b) the component can be removed from the cavity in a vertical direction without mechanical restriction, after the top cover tape has been removed.
   (c) rotation of the component is limited to 20° maximum for 8 and 12 mm tapes (see Figure 2).
   (d) lateral movement of the component is restricted to 0.5 mm maximum for 8 mm and 12 mm wide tape (see Figure 3).
   (e) see Addendum in EIA Standard 481–D for standards relating to more precise taping requirements.

Downloaded from Arrow.com.

Packaging Information Performance Notes

1. Cover tape break force: 1.0 kg minimum.
2. Cover tape peel strength: The total peel strength of the cover tape from the carrier tape shall be:

Tape Width	Peel Strength
8 mm	0.1 to 1.0 newton (10 to 100 gf)
12 mm	0.1 to 1.3 newton (10 to 130 gf)

The direction of the pull shall be opposite the direction of the carrier tape travel. The pull angle of the carrier tape shall be 165° to 180° from the plane of the carrier tape. During peeling, the carrier and/or cover tape shall be pulled at a velocity of 300 ±10 mm/minute.
3. Labeling: Bar code labeling (standard or custom) shall be on the side of the reel opposite the sprocket holes. *Refer to EIA Standards 556 and 624*.

Figure 2 – Maximum Component Rotation

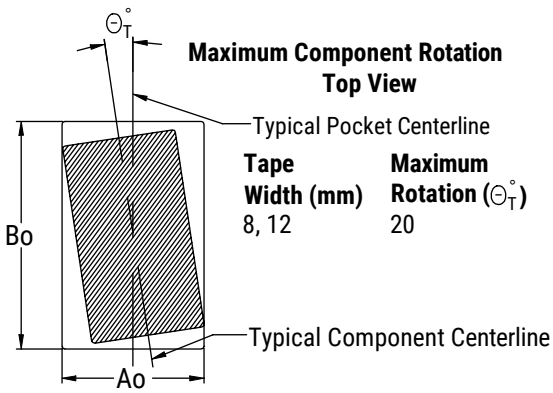

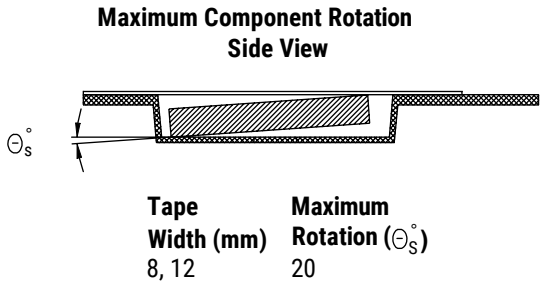

Figure 3 – Maximum Lateral Movement

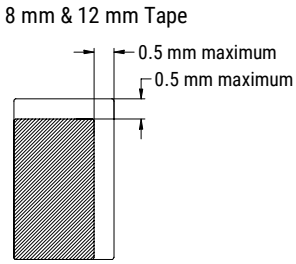

Figure 4 – Bending Radius

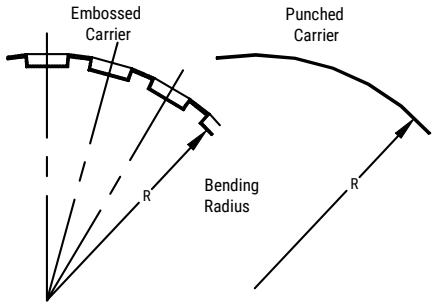

Downloaded from Arrow.com.

Figure 5 – Reel Dimensions

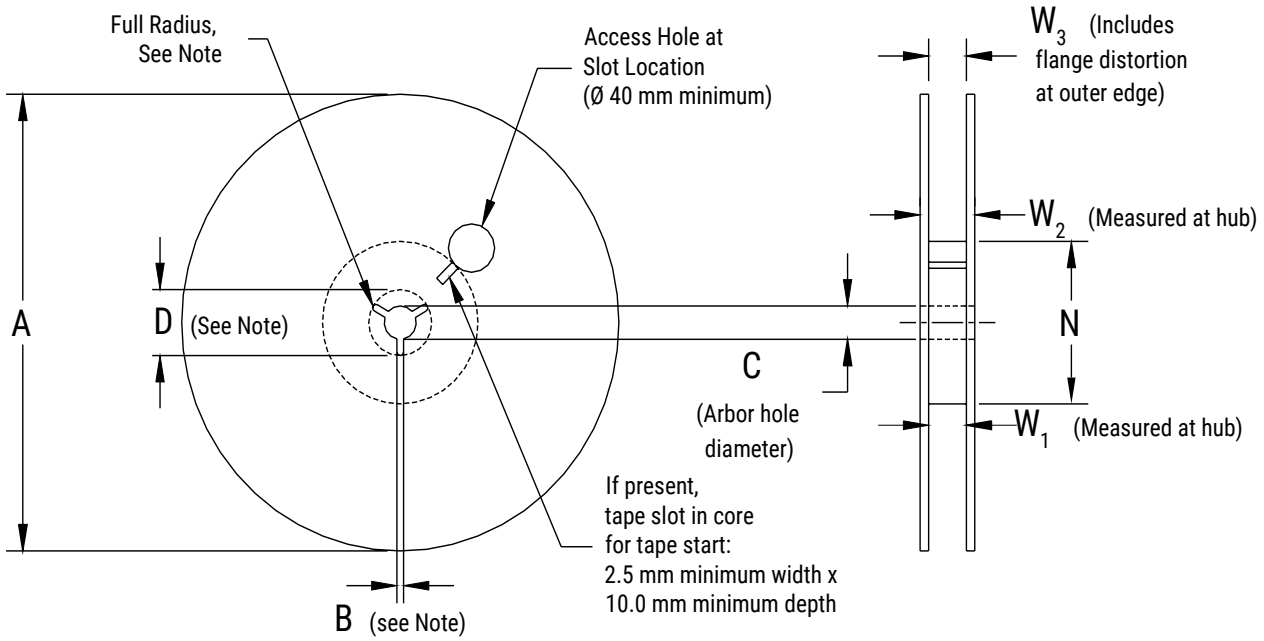

Note: Drive spokes optional; if used, dimensions B and D shall apply.

Table 5 – Reel Dimensions

Metric will govern

Constant Dimensions — Millimeters (Inches)				
Tape Size	A	B Minimum	C	D Minimum
8 mm	178 ±0.20 (7.008 ±0.008) or 330 ±0.20 (13.000 ±0.008)	1.5 (0.059)	13.0 +0.5/−0.2 (0.521 +0.02/−0.008)	20.2 (0.795)
12 mm				

Variable Dimensions — Millimeters (Inches)				
Tape Size	N Minimum	W_1	W_2 Maximum	W_3
8 mm	50 (1.969)	8.4 +1.5/−0.0 (0.331 +0.059/−0.0)	14.4 (0.567)	Shall accommodate tape width without interference
12 mm		12.4 +2.0/−0.0 (0.488 +0.078/−0.0)	18.4 (0.724)	

Downloaded from Arrow.com.

Figure 6 – Tape Leader & Trailer Dimensions

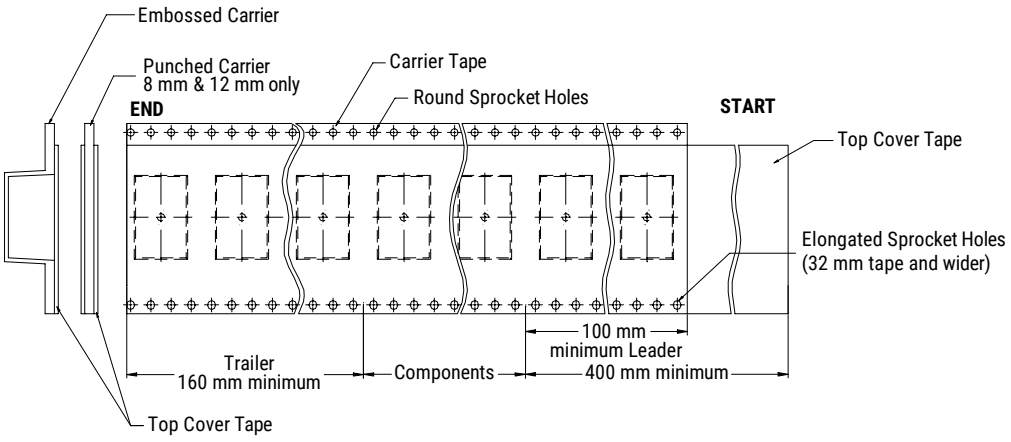

Figure 7 – Maximum Camber

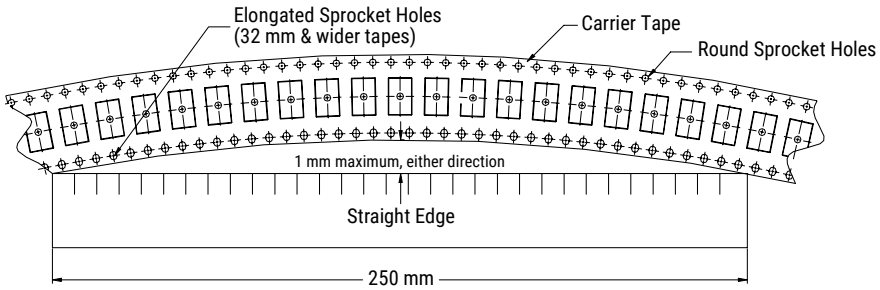

Downloaded from Arrow.com.

KEMET Electronics Corporation Sales Offices

For a complete list of our global sales offices, please visit https://www.yageogroup.com/SalesResources/SalesOffices

Disclaimer

YAGEO Corporation and its affiliates do not recommend the use of commercial or automotive grade products for high reliability applications or manned space flight.

All product specifications, statements, information and data (collectively, the "Information") in this datasheet are subject to change. The customer is responsible for checking and verifying the extent to which the Information contained in this publication is applicable to an order at the time the order is placed. All Information given herein is believed to be accurate and reliable, but it is presented without guarantee, warranty, or responsibility of any kind, expressed or implied.

Statements of suitability for certain applications are based on KEMET Electronics Corporation's ("KEMET") knowledge of typical operating conditions for such applications, but are not intended to constitute – and KEMET specifically disclaims – any warranty concerning suitability for a specific customer application or use. The Information is intended for use only by customers who have the requisite experience and capability to determine the correct products for their application. Any technical advice inferred from this Information or otherwise provided by KEMET with reference to the use of KEMET's products is given gratis, and KEMET assumes no obligation or liability for the advice given or results obtained.

Although KEMET designs and manufactures its products to the most stringent quality and safety standards, given the current state of the art, isolated component failures may still occur. Accordingly, customer applications which require a high degree of reliability or safety should employ suitable designs or other safeguards (such as installation of protective circuitry or redundancies) in order to ensure that the failure of an electrical component does not result in a risk of personal injury or property damage.

Although all product–related warnings, cautions and notes must be observed, the customer should not assume that all safety measures are indicated or that other measures may not be required.

KEMET is a registered trademark of KEMET Electronics Corporation.

Downloaded from Arrow.com.