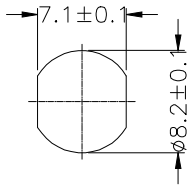

Recommended Panel Cut-Out

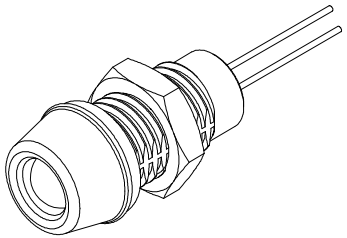

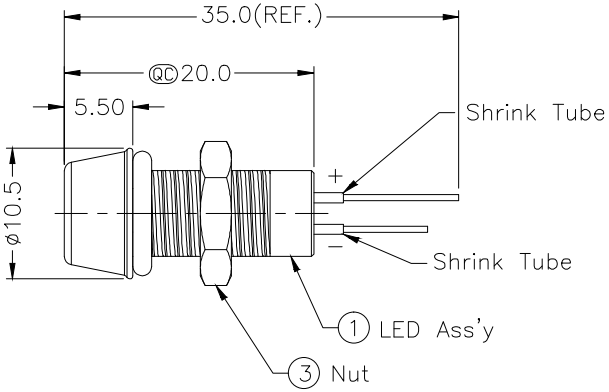

① Notes:

QC Important Dimension To Check
Waterproof Rate: IP67
LED Holder: Brass, Nickel Plating
LED: ø3 mm, Red
O-Ring: EPDM, Black
Screw Nut: Brass, Nickel Plating
Operating Voltage: DC 4V
Operating Temperature: −40~+80°C
For Panel Thickness 6.5mm Max.
Forward Voltage: Red Typ. 2.2V/Max.2.4(V)
Forward Current: Red Max. 30mA
Reverse Voltage: DC 5V
Luminous Intensity: Red Min.1080/Typ.2000(Mcd)

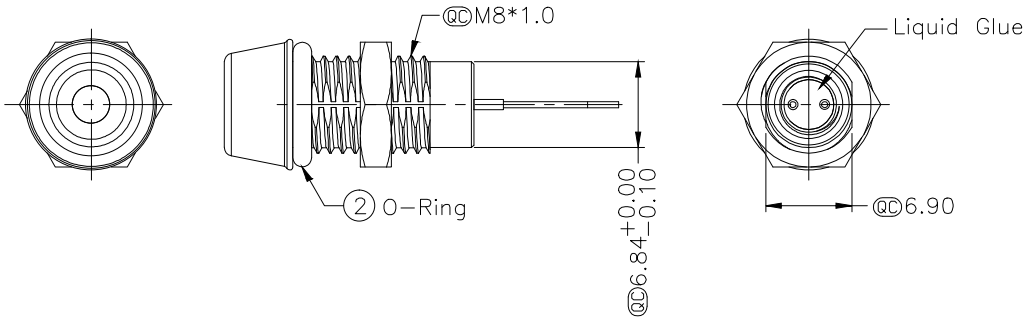

RoHS compliant

Scale	Free						Date	Name	Customer-No.
TOLERANCE						Drawn	11.03.2014	Winnie	
.X	±0.25					Approved	06.08.2021	Segal	ASSMANN WSW-No. A-LED8-1RAAS-MR7-1
.XX	±0.10								
.XXX	±0.05								Drawing-No. ASS 6231 CO
Angle	±1°	①	Update the notes	06.08.2021	Segal				rev01
		⓪	Drawn	11.03.2014	Winnie				
		Id.	Modification	Date	Name				Replace / Sheet

ASSMANN wsw components

Downloaded from Arrow.com.