ON Semiconductor

Is Now



To learn more about onsemi™, please visit our website at
www.onsemi.com

onsemi and onsemi and other names, marks, and brands are registered and/or common law trademarks of Semiconductor Components Industries, LLC dba "**onsemi**" or its affiliates and/or subsidiaries in the United States and/or other countries. **onsemi** owns the rights to a number of patents, trademarks, copyrights, trade secrets, and other intellectual property. A listing of **onsemi** product/patent coverage may be accessed at www.onsemi.com/site/pdf/Patent-Marking.pdf. **onsemi** reserves the right to make changes at any time to any products or information herein, without notice. The information herein is provided "as-is" and **onsemi** makes no warranty, representation or guarantee regarding the accuracy of the information, product features, availability, functionality, or suitability of its products for any particular purpose, nor does **onsemi** assume any liability arising out of the application or use of any product or circuit, and specifically disclaims any and all liability, including without limitation special, consequential or incidental damages. Buyer is responsible for its products and applications using **onsemi** products, including compliance with all laws, regulations and safety requirements or standards, regardless of any support or applications information provided by **onsemi**. "Typical" parameters which may be provided in **onsemi** data sheets and/or specifications can and do vary in different applications and actual performance may vary over time. All operating parameters, including "Typicals" must be validated for each customer application by customer's technical experts. **onsemi** does not convey any license under any of its intellectual property rights nor the rights of others. **onsemi** products are not designed, intended, or authorized for use as a critical component in life support systems or any FDA Class 3 medical devices or medical devices with a same or similar classification in a foreign jurisdiction or any devices intended for implantation in the human body. Should Buyer purchase or use **onsemi** products for any such unintended or unauthorized application, Buyer shall indemnify and hold **onsemi** and its officers, employees, subsidiaries, affiliates, and distributors harmless against all claims, costs, damages, and expenses, and reasonable attorney fees arising out of, directly or indirectly, any claim of personal injury or death associated with such unintended or unauthorized use, even if such claim alleges that **onsemi** was negligent regarding the design or manufacture of the part. **onsemi** is an Equal Opportunity/Affirmative Action Employer. This literature is subject to all applicable copyright laws and is not for resale in any manner. Other names and brands may be claimed as the property of others.

Downloaded from Arrow.com.

ON Semiconductor®

LMV321 / LMV358 / LMV324
General-Purpose, Low Voltage, Rail-to-Rail Output Amplifiers

Features at +2.7V

- 80 µA Supply Current per Channel
- 1.2 MHz Gain Bandwidth Product
- Output Voltage Range: 0.01 V to 2.69 V
- Input Voltage Range: -0.25 V to +1.5 V
- 1.5 V/µs Slew Rate
- LMV321 Directly Replaces Other Industry Standard LMV321 Amplifiers: Available in SC70-5 and SOT23-5 Packages
- LMV358 Directly Replaces Other Industry Standard LMV358 Amplifiers: Available in MSOP-8 and SOIC-8 Packages
- LMV324 Directly Replaces Other Industry Standard LMV324 Amplifiers: Available in SOIC-14 Packages
- Fully Specified at +2.7 V and +5 V Supplies
- Operating Temperature Range: -40°C to +125°C

Applications

- Low Cost General-Purpose Applications
- Cellular Phones
- Personal Data Assistants
- A/D Buffer
- DSP Interface
- Smart Card Readers
- Portable Test Instruments
- Keyless Entry
- Infrared Receivers for Remote Controls
- Telephone Systems
- Audio Applications
- Digital Still Cameras
- Hard Disk Drives
- MP3 Players

Description

The LMV321 (single), LMV358 (dual), and LMV324 (quad) are a low cost, voltage feedback amplifiers that consume only 80 µA of supply current per amplifier. The LMV3XX family is designed to operate from 2.7 V (±1.35 V) to 5.5 V (±2.75 V) supplies. The common mode voltage range extends below the negative rail and the output provides rail-to-rail performance.

The LMV3XX family is designed on a CMOS process and provides 1.2 MHz of bandwidth and 1.5 V/µs of slew rate at a low supply voltage of 2.7 V. The combination of low power, rail-to-rail performance, low voltage operation, and tiny pack-age options make the LMV3XX family well suited for use in personal electronics equipment such as cellular handsets, pagers, PDAs, and other battery powered applications.

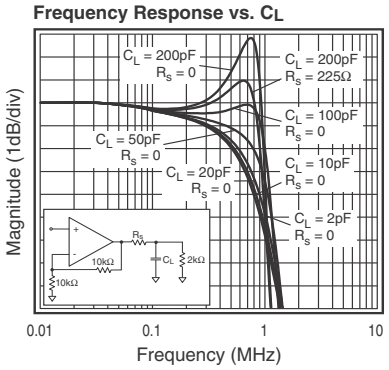

Typical Application

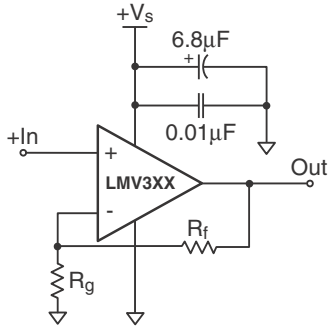

© 2002 Semiconductor Components Industries, LLC.
November-2017, Rev. 3

Publication Order Number:
LMV358/D

Downloaded from Arrow.com.

Ordering Information

Product Number	Package	Packing Method	Operating Temperature
LMV321AP5X	SC70 5L	Tape and Reel, 3000pcs	-40 to +125°C
LMV321AS5X	SOT-23 5L	Tape and Reel, 3000pcs	
LMV358AM8X	SOIC 8L (Narrow)	Tape and Reel, 2500pcs	
LMV358AMU8X	MSOP 8L	Tape and Reel, 3000pcs	
LMV324AM14X	SOIC 14L	Tape and Reel, 2500pcs	

Pin Assignments

LMV321

SOT23-5

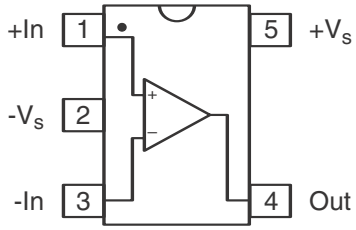

SC70-5

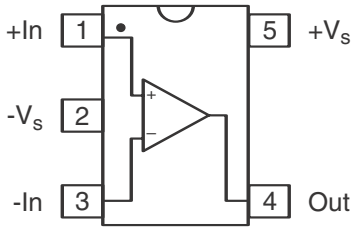

LMV358

SOIC-8

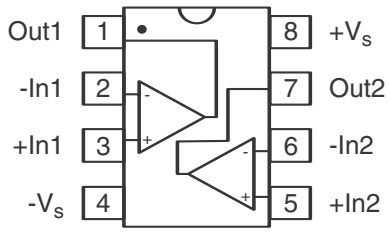

MSOP-8

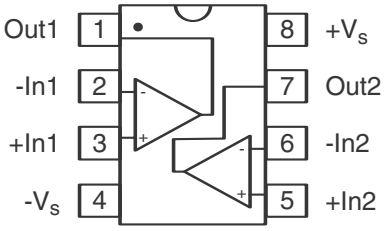

LMV324

SOIC-14

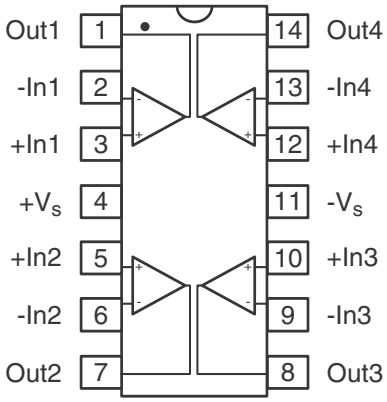

Downloaded from Arrow.com.

Absolute Maximum Ratings

Stresses exceeding the absolute maximum ratings may damage the device. The device may not function or be operable above the recommended operating conditions and stressing the parts to these levels is not recommended. In addition, extended exposure to stresses above the recommended operating conditions may affect device reliability. The absolute maximum ratings are stress ratings only.

Parameter	Min.	Max.	Unit
Supply Voltage	0	+6	V
Maximum Junction Temperature	-	+175	°C
Storage Temperature Range	-65	+150	°C
Lead Temperature, 10 Seconds	-	+260	°C
Input Voltage Range	$-V_S$ -0.5	$+V_S$ +0.5	V

Recommended Operating Conditions

Parameter	Min.	Max.	Unit
Operating Temperature Range	-40	+125	°C
Power Supply Operating Range	2.5	5.5	V

Package Thermal Resistance

Package	θ_{JA}	Unit
5 Lead SC70	331.4	°C/W
5 Lead SOT23	256	°C/W
8 Lead SOIC	152	°C/W
8 Lead MSOP	206	°C/W
14 Lead SOIC	88	°C/W

Downloaded from Arrow.com.

Electrical Specifications

T_C = 25°C, V_S = +2.7 V, G = 2, R_L = 10 kΩ to V_S/2, R_f = 10 kΩ, $V_{O(DC)}$ = V_{CC}/2, unless otherwise noted.

Parameter		Conditions	Min.	Typ.	Max.	Unit
AC Performance						
Gain Bandwidth Product		C_L= 50 pF, R_L= 2 kΩ to V_S/2		1.2		MHz
Phase Margin				52		deg
Gain Margin				17		dB
Slew Rate		V_O = $1V_{PP}$		1.5		V/μs
Input Voltage Noise		>50 kHz		36		nV/√Hz
Crosstalk	LMV358	100 kHz		91		dB
	LMV324	100 kHz		80		
DC Performance						
Input Offset Voltage(1)				1.7	7.0	mV
Average Drift				8		μV/°C
Input Bias Current(2)				<1		nA
Input Offset Current(2)				<1		nA
Power Supply Rejection Ratio(1)		DC	50	65		dB
Supply Current (Per Channel)(1)				80	120	μA
Input Characteristics						
Input Common Mode Voltage Range(1)		LO	0	-0.25		V
		HI		1.5	1.3	
Common Mode Rejection Ratio(1)			50	70		dB
Output Characteristics						
Output Voltage Swing		R_L= 10 kΩ to V_S/2; LO(1)		0.01	0.10	V
		R_L= 10 kΩ to V_S/2; HI(1)	2.60	2.69		

Min/max ratings are based on product characterization and simulation. Individual parameters are tested as noted. Outgoing quality levels are determined from tested parameters.

Notes:

1. Guaranteed by testing or statistical analysis at +25°C.
2. +IN and -IN are gates to CMOS transistors with typical input bias current of <1 nA. CMOS leakage is too small to practically measure.

Downloaded from Arrow.com.

Electrical Specifications (Continued)

T_C = 25°C, V_S = +5 V, G = 2, R_L = 10 kΩ to V_S/2, R_f = 10 kΩ, $V_{O(DC)}$ = V_{CC}/2, unless otherwise noted.

Parameter		Conditions	Min.	Typ.	Max.	Unit
AC Performance						
Gain Bandwidth Product		C_L= 50 pF, R_L= 2 kΩ to V_S/2		1.4		MHz
Phase Margin				73		deg
Gain Margin				12		dB
Slew Rate				1.5		V/μs
Input Voltage Noise		>50 kHz		33		nV/√Hz
Crosstalk	LMV358	100 kHz		91		dB
	LMV324	100 kHz		80		dB
DC Performance						
Input Offset Voltage(3)				1	7	mV
Average Drift				6		μV/°C
Input Bias Current(4)				<1		nA
Input Offset Current(4)				<1		nA
Power Supply Rejection Ratio(3)		DC	50	65		dB
Open Loop Gain(3)			50	70		dB
Supply Current (Per Channel)(3)				100	150	μA
Input Characteristics						
Input Common Mode Voltage Range(3)		LO	0	-0.4		V
		HI		3.8	3.6	V
Common Mode Rejection Ratio(3)			50	75		dB
Output Characteristics						
Output Voltage Swing		R_L= 2 kΩ to V_S/2; LO/HI		0.036 to 4.950		V
		R_L= 10 kΩ to V_S/2; LO(3)		0.013	0.100	V
		R_L= 10 kΩ to V_S/2; HI(3)	4.90	4.98		V
Short Circuit Output Current(3)		Sourcing; V_O = 0 V	5	+34		mA
		Sinking; V_O = 5 V	10	-23		mA

Min/max ratings are based on product characterization and simulation. Individual parameters are tested as noted. Outgoing quality levels are determined from tested parameters.

Notes:

3. Guaranteed by testing or statistical analysis at +25°C.
4. +IN and -IN are gates to CMOS transistors with typical input bias current of <1 nA. CMOS leakage is too small to practically measure.

Downloaded from Arrow.com.

Typical Operating Characteristics

T_C = 25°C, V_S = +5 V, G = 2, R_L = 10 kΩ to V_S/2, R_f = 10 kΩ, $V_{O(DC)}$ = V_{CC}/2, unless otherwise noted.

Non-Inverting Freq. Response V_S = +5V

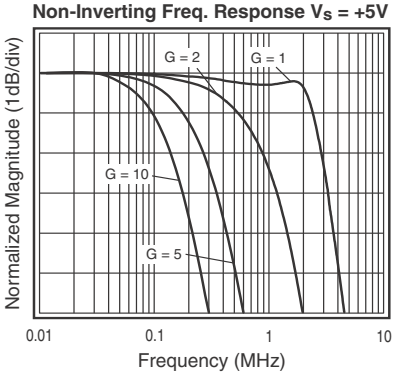

Inverting Frequency Response V_S = +5V

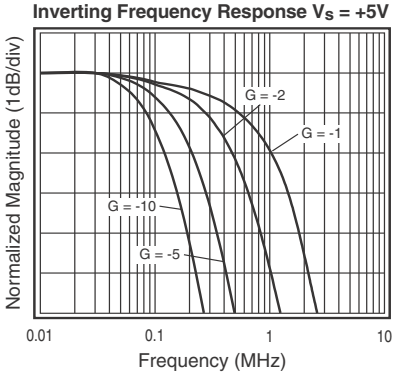

Non-Inverting Freq. Response V_S = +2.7V

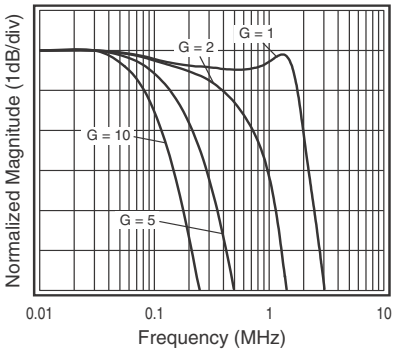

Inverting Freq. Response V_S = +2.7V

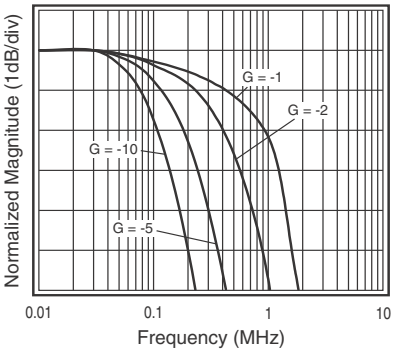

Frequency Response vs. C_L

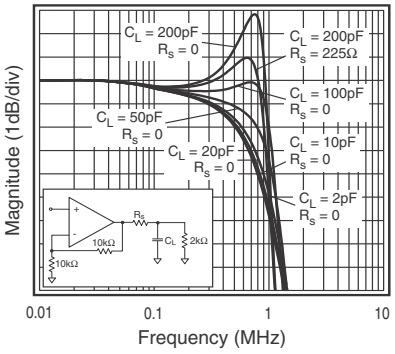

Frequency Response vs. R_L

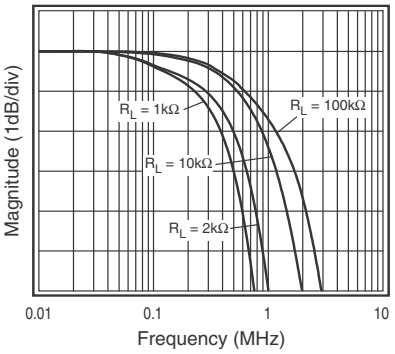

Small Signal Pulse Response

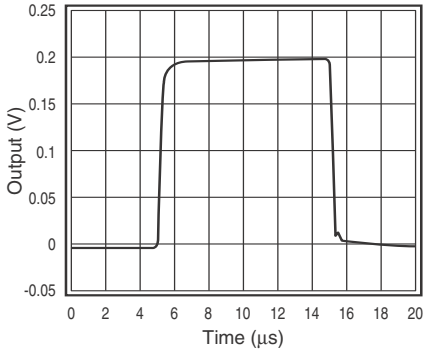

Large Signal Pulse Response

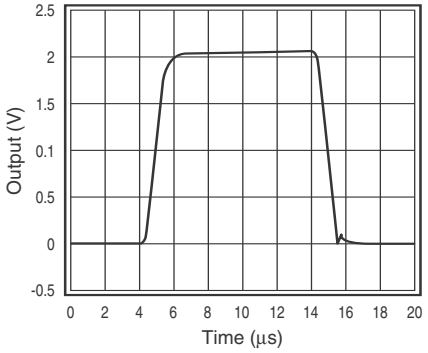

Downloaded from Arrow.com.

Typical Operating Characteristics (Continued)

T_C = 25°C, V_S = +5 V, G = 2, R_L = 10 kΩ to V_S/2, R_f = 10 kΩ, $V_{O(DC)}$ = V_{CC}/2, unless otherwise noted.

Input Voltage Noise

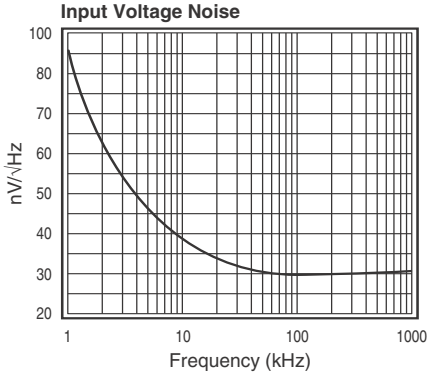

Total Harmonic Distortion

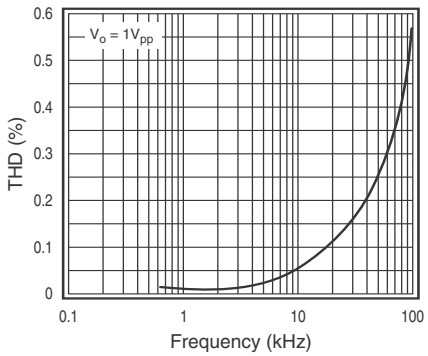

Open Loop Gain & Phase vs. Frequency

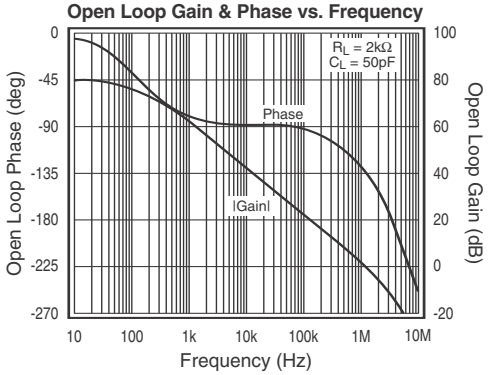

Downloaded from Arrow.com.

Application Information

General Description

The LMV3XX family are single supply, general-purpose, voltage-feedback amplifiers that are pin-for-pin compatible and drop in replacements with other industry standard LMV321, LMV358, and LMV324 amplifiers. The LMV3XX family is fabricated on a CMOS process, features a rail-to-rail output, and is unity gain stable.

The typical non-inverting circuit schematic is shown in Figure1.

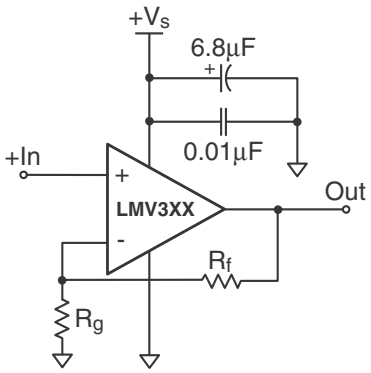

Figure 1. Typical Non-inverting configuration

Power Dissipation

The maximum internal power dissipation allowed is directly related to the maximum junction temperature. If the maximum junction temperature exceeds 150°C, some performance degradation will occur. If the maximum junction temperature exceeds 175°C for an extended time, device failure may occur.

Driving Capacitive Loads

The ***Frequency Response vs. C_L*** plot on page 4, illustrates the response of the LMV3XX family. A small series resistance (R_S) at the output of the amplifier, illustrated in Figure 2, will improve stability and settling performance. R_S values in the ***Frequency Response vs. C_L*** plot were chosen to achieve maximum bandwidth with less than 1dB of peaking. For maximum flatness, use a larger R_S. As the plot indicates, the LMV3XX family can easily drive a 200 pF capacitive load without a series resistance. For comparison, the plot also shows the LMV321 driving a 200 pF load with a 225 Ω series resistance.

Driving a capacitive load introduces phase-lag into the output signal, which reduces phase margin in the amplifier. The unity gain follower is the most sensitive configuration. In a unity gain follower configuration, the LMV3XX family requires a 450 Ω series resistor to drive a 200 pF load. The response is illustrated in Figure 3.

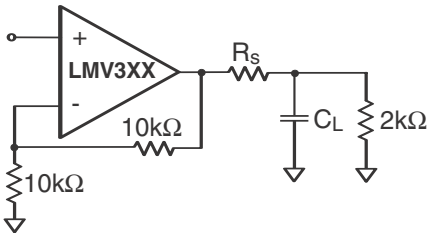

Figure 2. Typical Topology for driving a capacitive load

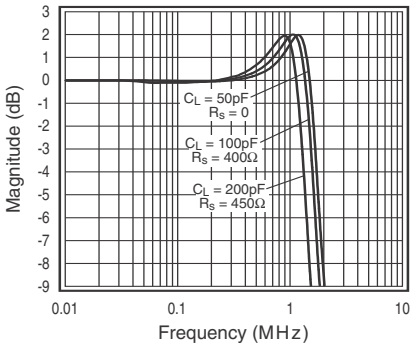

Figure 3. Frequency Response vs. C_L for unity gain configuration

Layout Considerations

General layout and supply bypassing play major roles in high frequency performance. ON Semiconductor has evaluation boards to use as a guide for high frequency layout and as aid in device testing and characterization. Follow the steps below as a basis for high frequency layout:

- Include 6.8 µF and 0.01 µF ceramic capacitors
- Place the 6.8 µF capacitor within 0.75 inches of the power pin
- Place the 0.01 µF capacitor within 0.1 inches of the power pin
- Remove the ground plane under and around the part, especially near the input and output pins to reduce parasitic capacitance
- Minimize all trace lengths to reduce series inductances

Refer to the evaluation board layouts shown in Figure 5 on page 8 for more information.

Downloaded from Arrow.com.

Evaluation Board Information

The following evaluation boards are NOT available any more but their Schematic & Layout information will be useful for references to aid in the testing and layout of this device.

Eval Bd	Description	Products
KEB013	Single Channel, Dual Supply, SOT23-5 for Buffer-Style Pinout	LMV321AS5X
KEB014	Single Channel, Dual Supply, SC70-5 for Buffer-Style Pinout	LMV321AP5X
KEB006	Dual Channel, Dual Supply, 8 Lead SOIC	LMV358AM8X
KEB010	Dual Channel, Dual Supply, 8 Lead MSOP	LMV358AMU8X
KEB018	Quad Channel, Dual Supply, 14 Lead SOIC	LMV324AM14X

Evaluation board schematics and layouts are shown in Figures 4 and 5.

Evaluation Board Schematic Diagrams

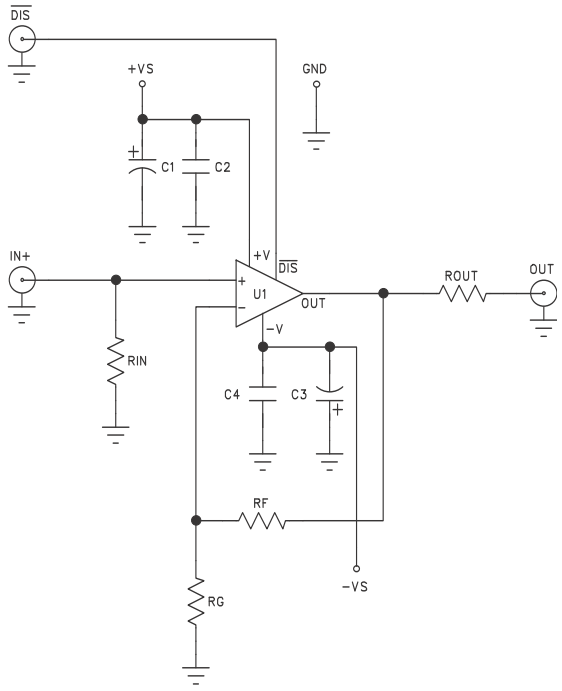

Figure 4a. LMV321 KEB013 schematic

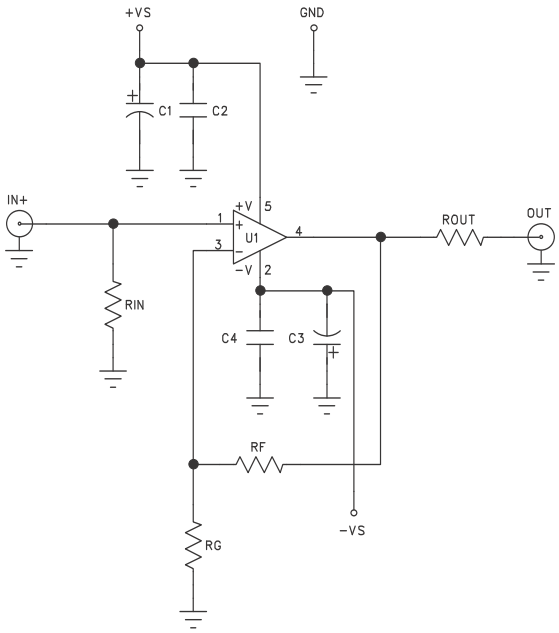

Figure 4b. LMV321 KEB014 schematic

Downloaded from Arrow.com.

Evaluation Board Schematic Diagrams (Continued)

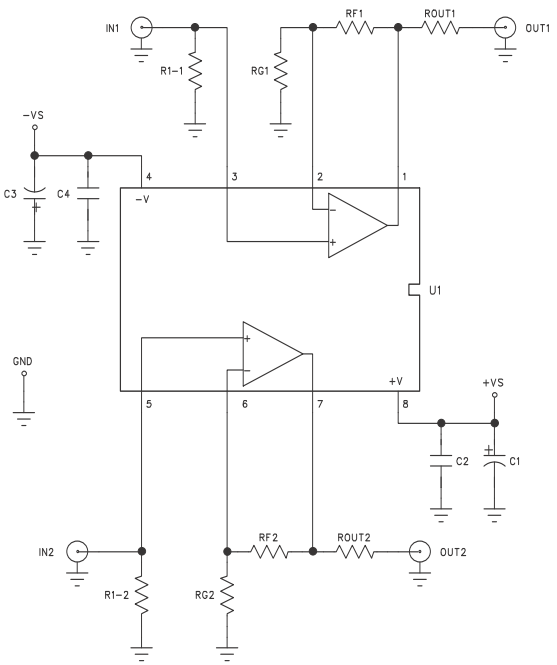

Figure 4c. LMV358 KEB006/KEB010 schematic

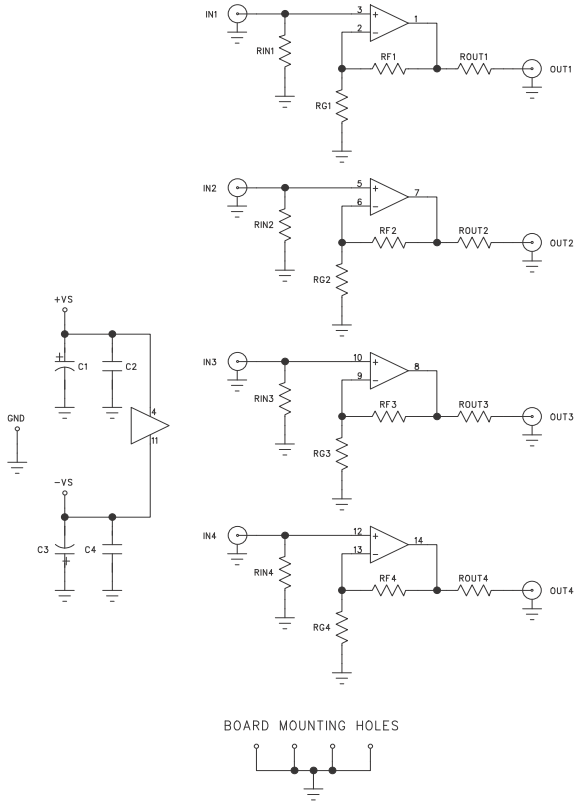

Figure 4d. LMV324 KEB018 schematic

Downloaded from Arrow.com.

LMV321 Evaluation Board Layout

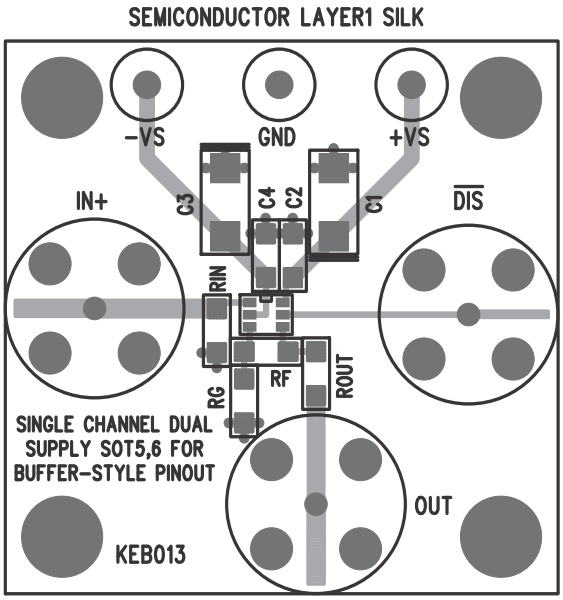

Figure 5a. KEB013 (top side)

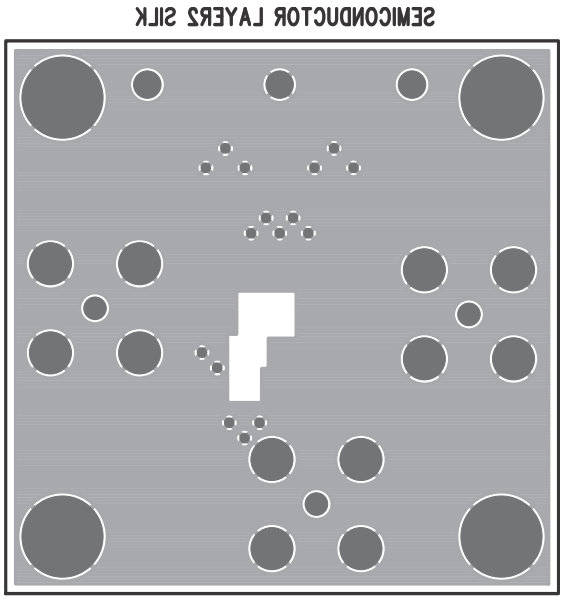

Figure 5b. KEB013 (bottom side)

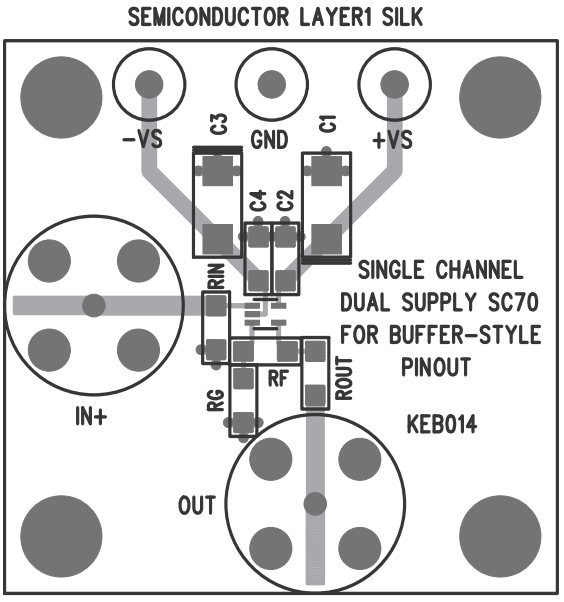

Figure 5c. KEB014 (top side)

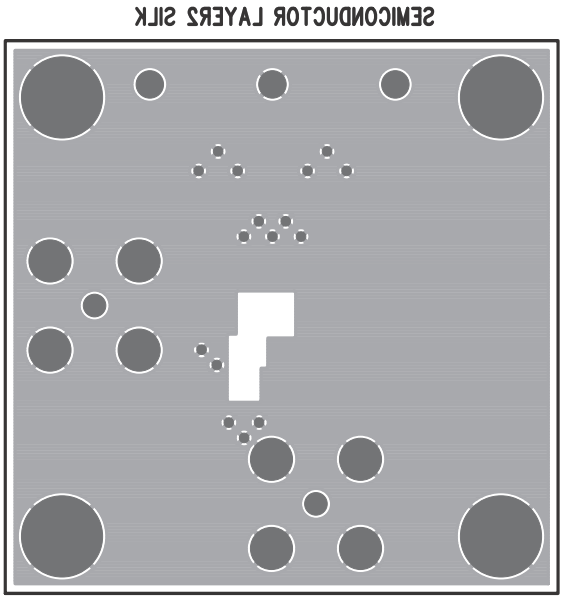

Figure 5d. KEB014 (bottom side)

Downloaded from Arrow.com.

LMV358 Evaluation Board Layout

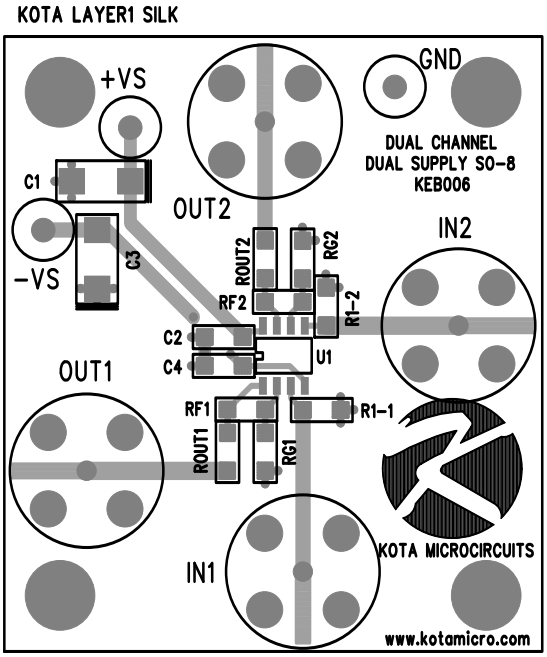

Figure 5e. KEB006 (top side)

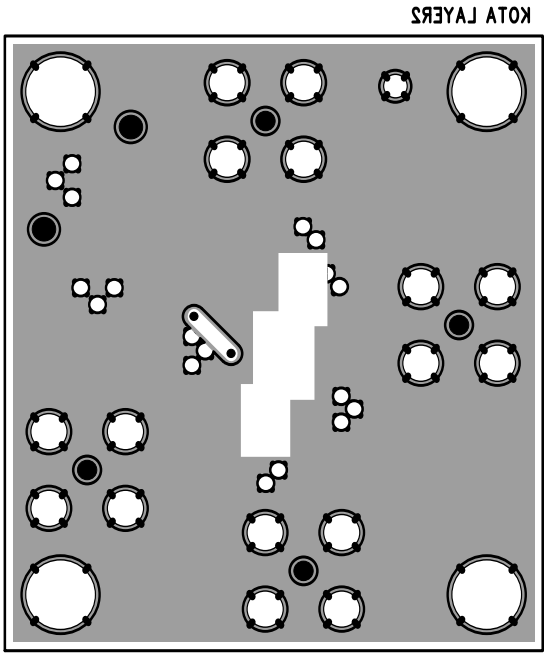

Figure 5f. KEB006 (bottom side)

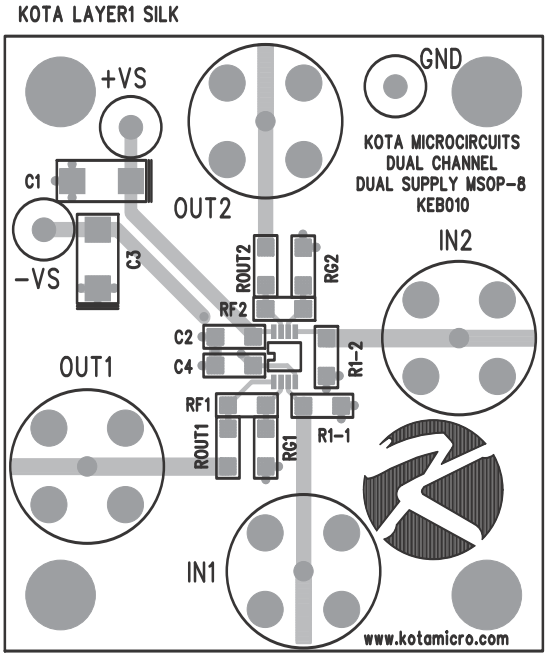

Figure 5g. KEB010 (top side)

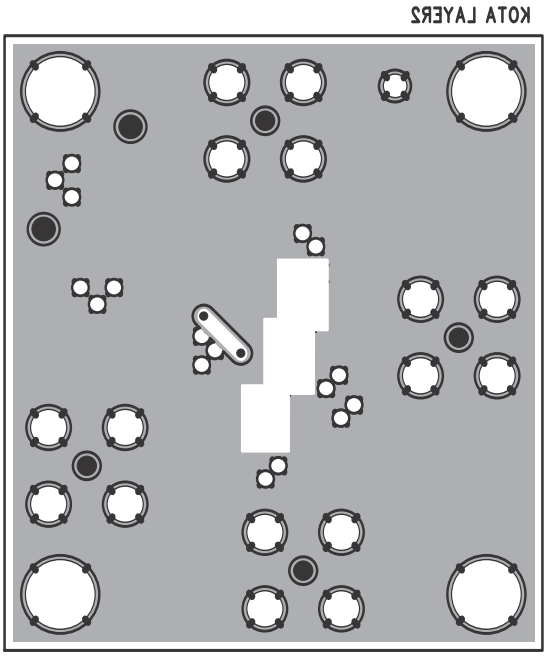

Figure 5h. KEB010 (bottom side)

Downloaded from Arrow.com.

LMV324 Evaluation Board Layout

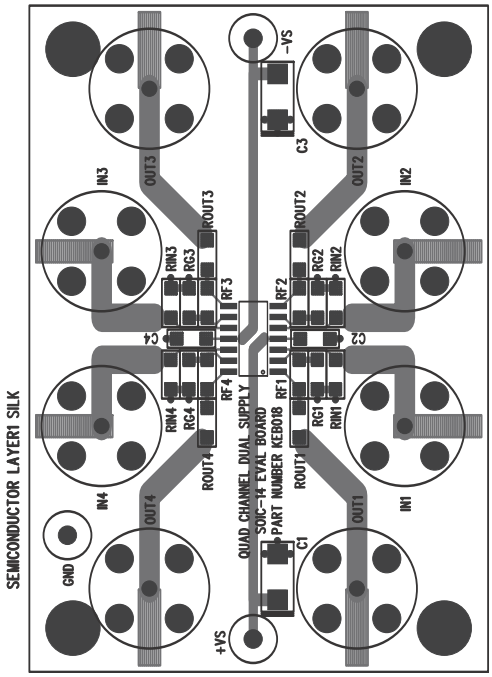

Figure 5i. KEB018 (top side)

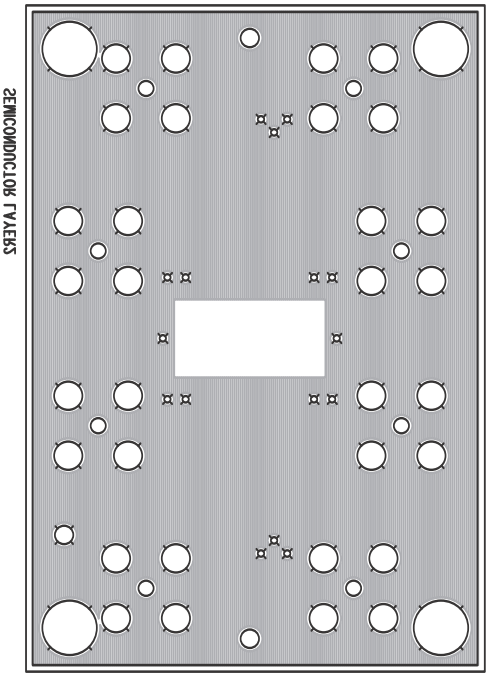

Figure 5j. KEB018 (bottom side)

Downloaded from Arrow.com.

Physical Dimensions

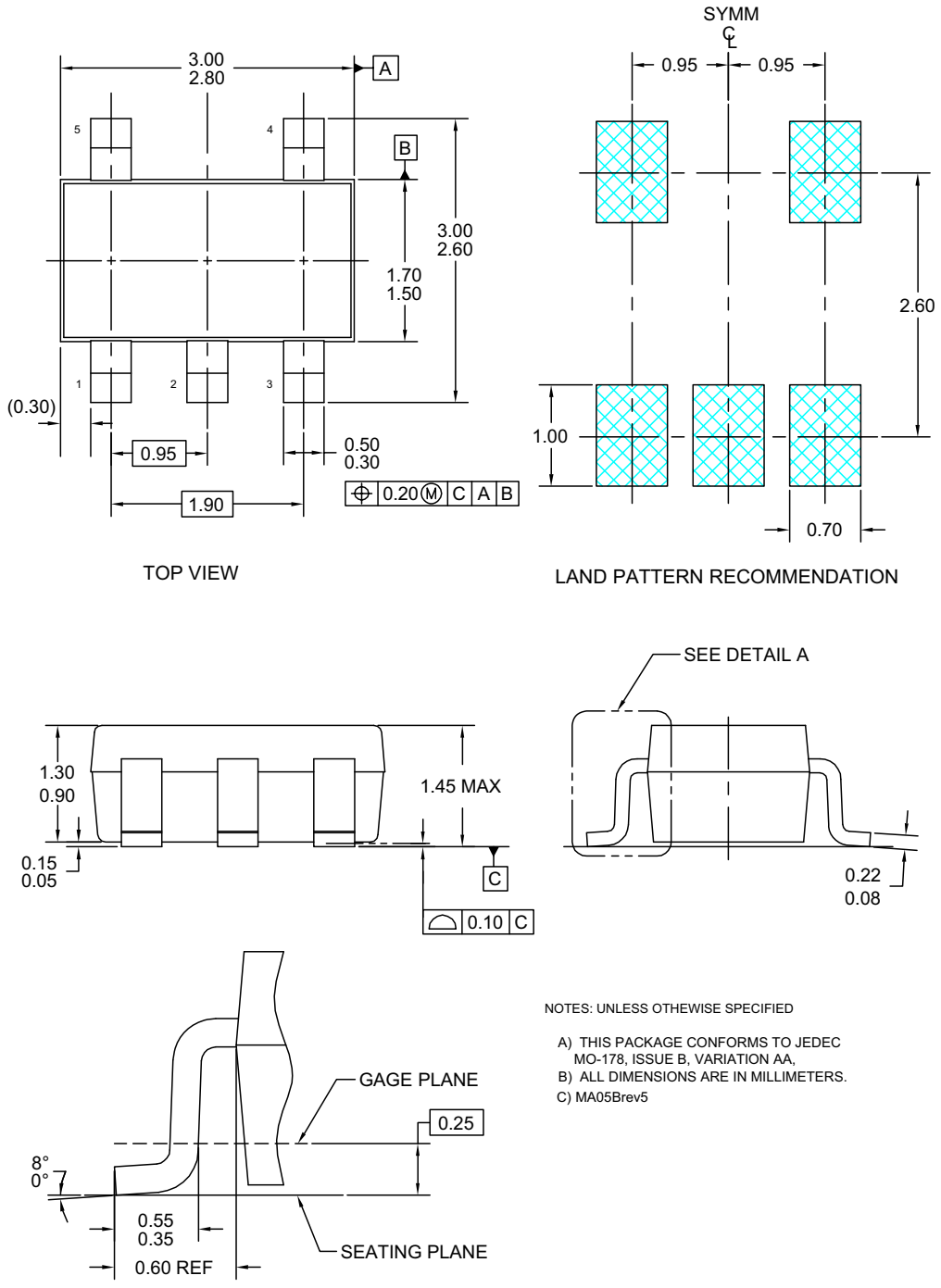

Figure 6. 5-LEAD, SOT-23, JEDEC MO-178, 1.6MM

Downloaded from Arrow.com.

Physical Dimensions (Continued)

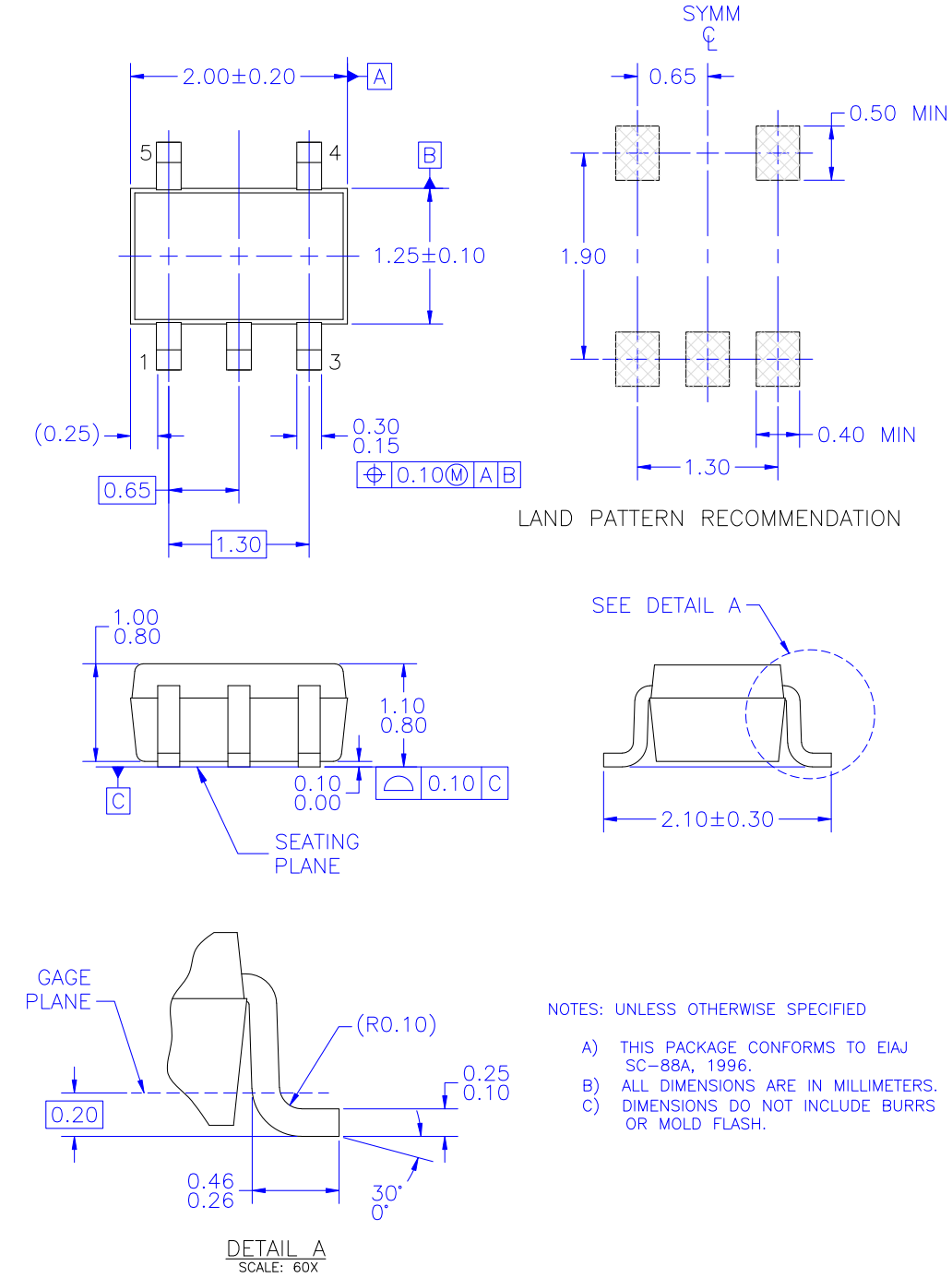

Figure 7. 5-LEAD, SC70, EIAJ SC-88A, 1.25MM WIDE

Downloaded from Arrow.com.

Physical Dimensions (Continued)

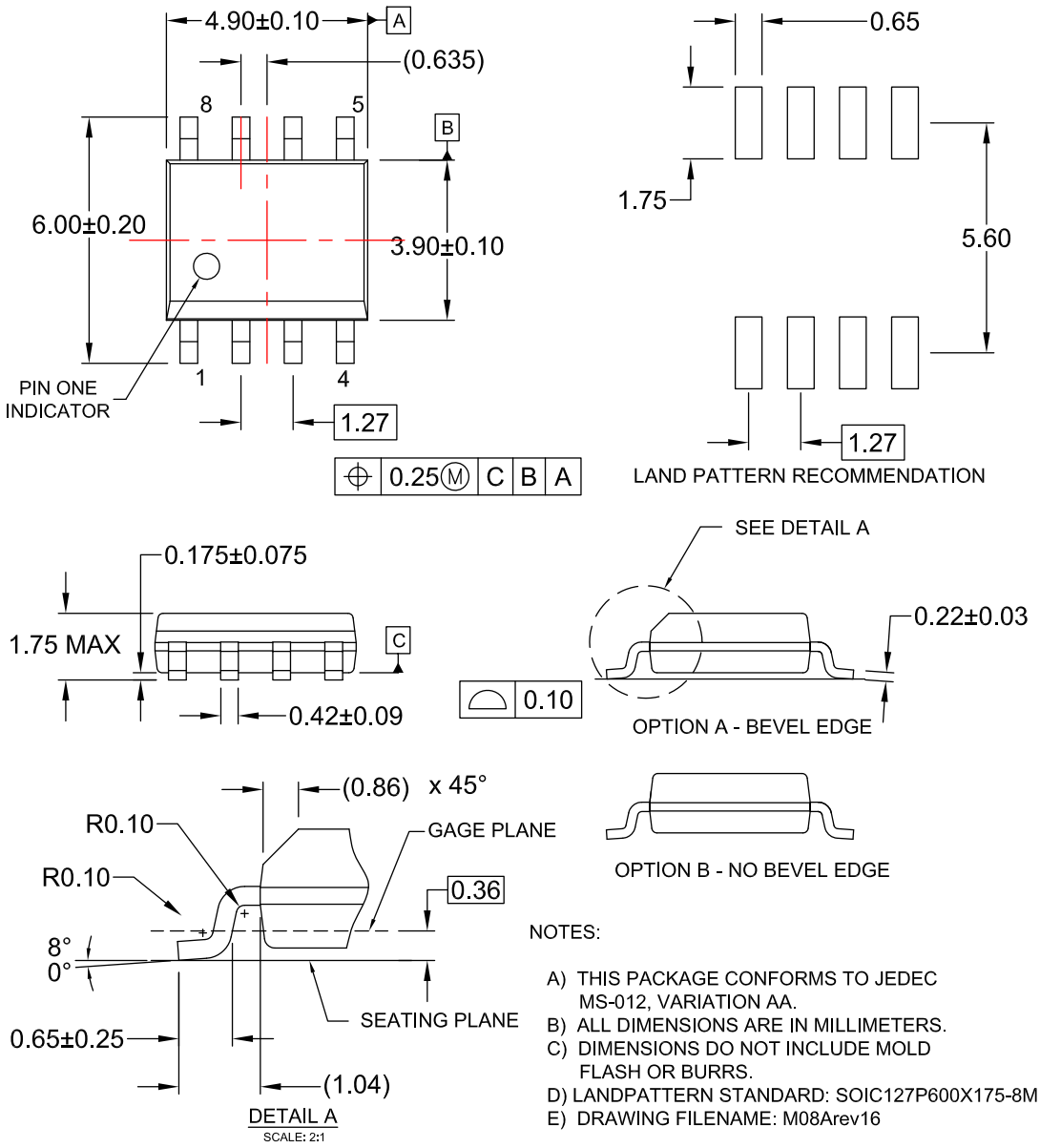

Figure 8. 8-LEAD, SOIC, JEDEC MS-012, 0.150 INCH NARROW BODY

Downloaded from Arrow.com.

Physical Dimensions (Continued)

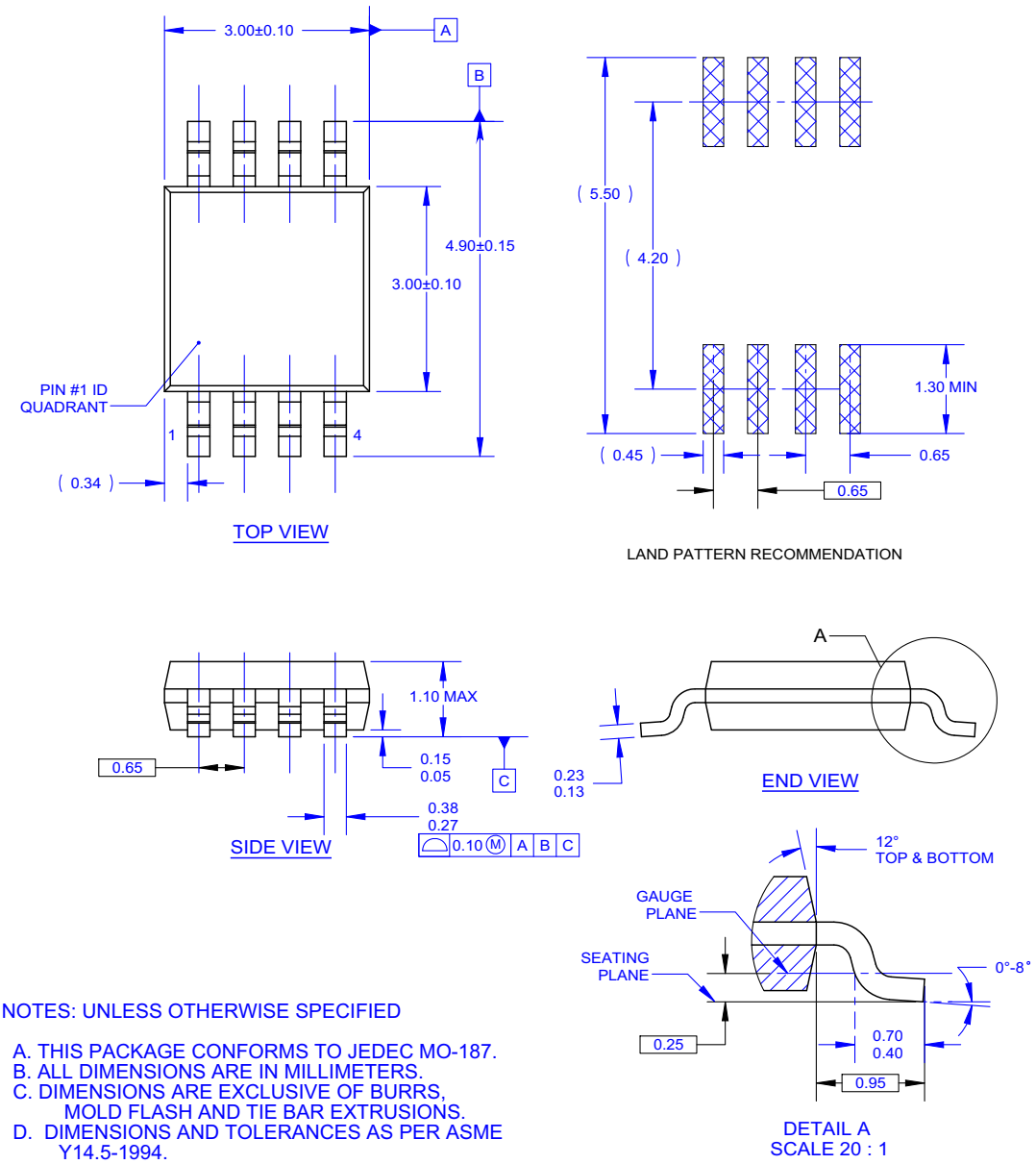

NOTES: UNLESS OTHERWISE SPECIFIED

A. THIS PACKAGE CONFORMS TO JEDEC MO-187.
B. ALL DIMENSIONS ARE IN MILLIMETERS.
C. DIMENSIONS ARE EXCLUSIVE OF BURRS, MOLD FLASH AND TIE BAR EXTRUSIONS.
D. DIMENSIONS AND TOLERANCES AS PER ASME Y14.5-1994.
E. LAND PATTERN AS PER IPC7351#TSOP65P490X110-8BL
F. FILE NAME: MKT-MUA08AREV4

Figure 9. 8-LEAD, MSOP, JEDEC MO-187, 3.0MM WIDE

Downloaded from Arrow.com.

Physical Dimensions (Continued)

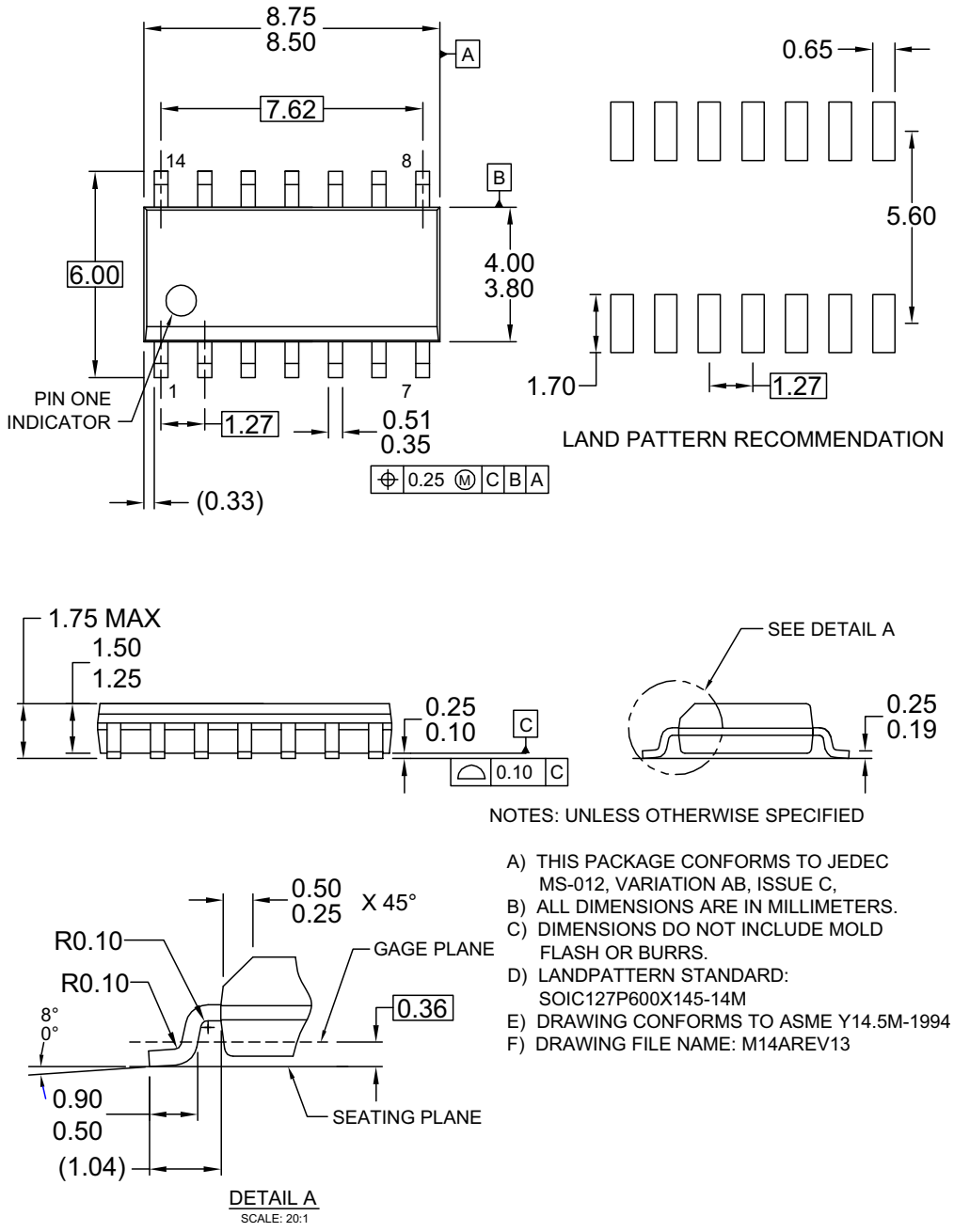

Figure 10. 14-LEAD, SOIC, JEDEC MS-012, 0.150 INCH NARROW BODY

Downloaded from Arrow.com.

ON Semiconductor and ON are trademarks of Semiconductor Components Industries, LLC dba ON Semiconductor or its subsidiaries in the United States and/or other countries. ON Semiconductor owns the rights to a number of patents, trademarks, copyrights, trade secrets, and other intellectual property. A listing of ON Semiconductor's product/patent coverage may be accessed at www.onsemi.com/site/pdf/Patent−Marking.pdf. ON Semiconductor reserves the right to make changes without further notice to any products herein. ON Semiconductor makes no warranty, representation or guarantee regarding the suitability of its products for any particular purpose, nor does ON Semiconductor assume any liability arising out of the application or use of any product or circuit, and specifically disclaims any and all liability, including without limitation special, consequential or incidental damages. Buyer is responsible for its products and applications using ON Semiconductor products, including compliance with all laws, regulations and safety requirements or standards, regardless of any support or applications information provided by ON Semiconductor. "Typical" parameters which may be provided in ON Semiconductor data sheets and/or specifications can and do vary in different applications and actual performance may vary over time. All operating parameters, including "Typicals" must be validated for each customer application by customer's technical experts. ON Semiconductor does not convey any license under its patent rights nor the rights of others. ON Semiconductor products are not designed, intended, or authorized for use as a critical component in life support systems or any FDA Class 3 medical devices or medical devices with a same or similar classification in a foreign jurisdiction or any devices intended for implantation in the human body. Should Buyer purchase or use ON Semiconductor products for any such unintended or unauthorized application, Buyer shall indemnify and hold ON Semiconductor and its officers, employees, subsidiaries, affiliates, and distributors harmless against all claims, costs, damages, and expenses, and reasonable attorney fees arising out of, directly or indirectly, any claim of personal injury or death associated with such unintended or unauthorized use, even if such claim alleges that ON Semiconductor was negligent regarding the design or manufacture of the part. ON Semiconductor is an Equal Opportunity/Affirmative Action Employer. This literature is subject to all applicable copyright laws and is not for resale in any manner.

PUBLICATION ORDERING INFORMATION

LITERATURE FULFILLMENT:
Literature Distribution Center for ON Semiconductor
19521 E. 32nd Pkwy, Aurora, Colorado 80011 USA
Phone: 303−675−2175 or 800−344−3860 Toll Free USA/Canada
Fax: 303−675−2176 or 800−344−3867 Toll Free USA/Canada
Email: orderlit@onsemi.com

N. American Technical Support: 800−282−9855 Toll Free USA/Canada
Europe, Middle East and Africa Technical Support:
Phone: 421 33 790 2910
Japan Customer Focus Center
Phone: 81−3−5817−1050

ON Semiconductor Website: **www.onsemi.com**

Order Literature: http://www.onsemi.com/orderlit

For additional information, please contact your local Sales Representative

Downloaded from Arrow.com.