Overview

The KEMET ELH aluminum electrolytic snap-in capacitors are designed with snap-lock terminals for printed circuit board mounting. The case is aluminum with an insulated sleeve and safety vent at the bottom.

Applications

Typical applications include general purpose power electronics, UPS, SMPS, and battery chargers.

Benefits

- Suited for high quality, high reliability applications
- Operating temperature of up to 85°C
- 2,000 hour operating life
- RoHS compliant and lead-free

Part Number System

ELH	159	M	6R3		A	Q1	AA
Series	Capacitance Code (pF)	Tolerance	Rated Voltage (VDC)		Electrical Parameters	Size Code	Packaging
Snap-In Aluminum Electrolytic	First two digits represent significant figures for capacitance values. Last digit specifies the number of zeros to be added.	M = ±20%	6R3 = 6.3 010 = 10 016 = 16 025 = 25 035 = 35 050 = 50 063 = 63 080 = 80 100 = 100	160 = 160 180 = 180 200 = 200 250 = 250 350 = 350 400 = 400 420 = 420 450 = 450 500 = 500	A = Standard	See Dimension Table	See Ordering Options Table

Ordering Options Table

Packaging Type	Lead Length (mm)	Lead and Packaging Code
Standard Bulk Packaging Options		
Bulk (box)	5.8 ± 1.0	AA
Bulk (box)	4.0 ± 1.0	AV

Downloaded from Arrow.com.

Dimensions – Millimeters

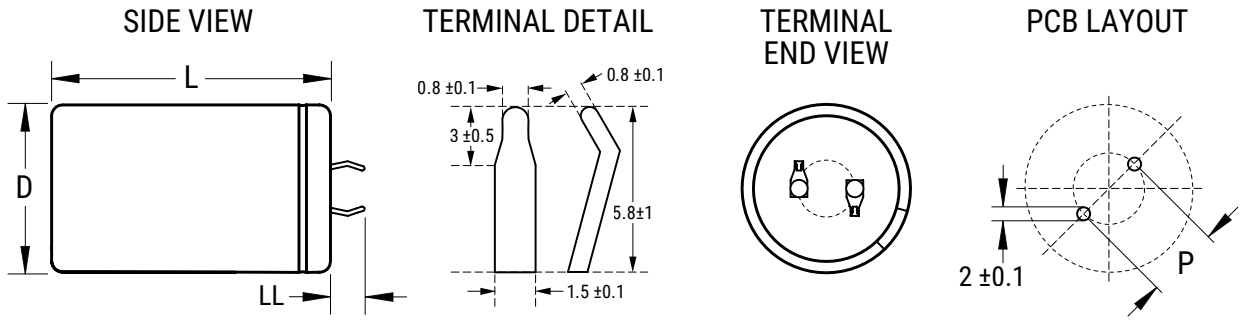

Size Code	D		L		p	
	Nominal	Tolerance	Nominal	Tolerance	Nominal	Tolerance
Q7	22	±1.0	20	±2.0	10.0	±0.5
Q1	22	±1.0	25	±2.0	10.0	±0.5
Q2	22	±1.0	30	±2.0	10.0	±0.5
Q3	22	±1.0	35	±2.0	10.0	±0.5
Q4	22	±1.0	40	±2.0	10.0	±0.5
Q5	22	±1.0	45	±2.0	10.0	±0.5
Q6	22	±1.0	50	±2.0	10.0	±0.5
R7	25	±1.0	20	±2.0	10.0	±0.5
R1	25	±1.0	25	±2.0	10.0	±0.5
R2	25	±1.0	30	±2.0	10.0	±0.5
R3	25	±1.0	35	±2.0	10.0	±0.5
R4	25	±1.0	40	±2.0	10.0	±0.5
R5	25	±1.0	45	±2.0	10.0	±0.5
R6	25	±1.0	50	±2.0	10.0	±0.5
S1	30	±1.0	25	±2.0	10.0	±0.5
S2	30	±1.0	30	±2.0	10.0	±0.5
S3	30	±1.0	35	±2.0	10.0	±0.5
S4	30	±1.0	40	±2.0	10.0	±0.5
S5	30	±1.0	45	±2.0	10.0	±0.5
S6	30	±1.0	50	±2.0	10.0	±0.5
T1	35	±1.0	25	±2.0	10.0	±0.5
T2	35	±1.0	30	±2.0	10.0	±0.5
T3	35	±1.0	35	±2.0	10.0	±0.5
T4	35	±1.0	40	±2.0	10.0	±0.5
T5	35	±1.0	45	±2.0	10.0	±0.5
T6	35	±1.0	50	±2.0	10.0	±0.5
T8	35	±1.0	60	±2.0	10.0	±0.5

Downloaded from Arrow.com.

Environmental Compliance

As an environmentally conscious company, KEMET is working continuously with improvements concerning the environmental effects of both our capacitors and their production. In Europe (RoHS Directive) and in some other geographical areas like China, legislation has been put in place to prevent the use of some hazardous materials, such as lead (Pb), in electronic equipment. All products in this catalog are produced to help our customers' obligations to guarantee their products and fulfill these legislative requirements. The only material of concern in our products has been lead (Pb), which has been removed from all designs to fulfill the requirement of containing less than 0.1% of lead in any homogeneous material. KEMET will closely follow any changes in legislation world wide and make any necessary changes in its products, whenever needed.

Some customer segments such as medical, military and automotive electronics may still require the use of lead in electrode coatings. To clarify the situation and distinguish products from each other, a special symbol is used on the packaging labels for RoHS compatible capacitors.

Due to customer requirements, there may appear additional markings such as lead free (LF) or lead-free wires (LFW) on the label.

Performance Characteristics

Item	Performance Characteristics	
Capacitance Range	820 – 120000 µF	47 – 2,200 µF
Capacitance Tolerance	±20% at 120 Hz/20°C	
Rated Voltage	6.3 – 100 VDC	160 – 500 VDC
Life Test	2,000 hours (see conditions in Test Methods & Performance)	
Operating Temperature	−40°C to +85°C	−25°C to +85°C
Leakage Current	I = 0.02 CV (mA) or 3 mA, whichever is smaller	
	C = rated capacitance (µF), V = rated voltage (VDC). Voltage applied for 5 minutes at 20°C.	

Compensation Factor of Ripple Current (RC) vs. Frequency

Rated Voltage (VDC)	50 Hz	60 Hz	120 Hz	1 kHz	10 kHz
6.3 – 100	0.88	0.90	1.00	1.15	1.16
160 – 250	0.75	0.78	1.00	1.30	1.50
350 – 450	0.74	0.76	1.00	1.35	1.45
500	0.72	0.74	1.00	1.20	1.30

Downloaded from Arrow.com.

Test Method & Performance

Conditions	Load Life Test	Shelf Life Test
Temperature	85°C	85°C
Test Duration	2,000 hours	1,000 hours
Ripple Current	Maximum ripple current specified at 120 kHz 85°C specified in table	No ripple current applied
Voltage	The sum of DC voltage and the peak AC voltage must not exceed the rated voltage of the capacitor	No voltage applied
Performance	**The following specifications will be satisfied when the capacitor is restored to 20°C:**	
Capacitance Change	Within ±20% of the initial value	
Dissipation Factor	Does not exceed 200% of the specified value	Does not exceed 200% of the specified value
Leakage Current	Does not exceed specified value	

Shelf Life

The capacitance, ESR and impedance of a capacitor will not change significantly after extended storage periods, however, the leakage current will very slowly increase.

KEMET's E aluminum electrolytic capacitors should not be stored in high temperatures or where there is a high level of humidity. The suitable storage condition for KEMET's E aluminum electrolytic capacitors is +5 to +35°C and less than 75% in relative humidity. KEMET's E aluminum electrolytic capacitors should not be stored in damp conditions such as water, saltwater spray or oil spray. KEMET's E aluminum electrolytic capacitors should not be stored in an environment full of hazardous gas (hydrogen sulphide, sulphurous acid gas, nitrous acid, chlorine gas, ammonium, etc.) KEMET's E aluminum electrolytic capacitors should not be stored under exposure to ozone, ultraviolet rays or radiation.

If a capacitor has been stored for more than 18 months under these conditions and it shows increased leakage current, then a treatment by voltage application is recommended.

Re-Age (Reforming) Procedure

Apply the rated voltage to the capacitor at room temperature for a period of one hour, or until the leakage current has fallen to a steady value below the specified limit. During re-aging a maximum charging current of twice the specified leakage current or 5 mA, whichever is greater, is suggested.

Downloaded from Arrow.com.

Table 1 – Ratings & Part Number Reference

Rated Voltage	Surge Voltage	Rated Capacitance	Case Size	DF	RC	LC	ESR	Part Number
(VDC)	(VDC)	120 Hz 20°C (µF)	D x L (mm)	120 Hz 20°C (tanδ %)*	120 Hz 85°C (A)	20°C 5 minutes (mA)	120 Hz 20°C (Ω)	( ) Represents Part Number Options
6.3	8	15,000	22 x 25	60	2.44	1.9	0.053	ELH159M6R3AQ1(1)
6.3	8	18,000	22 x 30	60	2.60	2.3	0.044	ELH189M6R3AQ2(1)
6.3	8	22,000	22 x 30	60	3.06	2.8	0.036	ELH229M6R3AQ2(1)
6.3	8	27,000	22 x 35	60	3.49	3.0	0.029	ELH279M6R3AQ3(1)
6.3	8	33,000	22 x 40	60	3.97	3.0	0.024	ELH339M6R3AQ4(1)
6.3	8	39,000	22 x 50	60	4.56	3.0	0.020	ELH399M6R3AQ6(1)
6.3	8	18,000	25 x 25	60	2.62	2.3	0.044	ELH189M6R3AR1(1)
6.3	8	22,000	25 x 25	60	3.07	2.8	0.036	ELH229M6R3AR1(1)
6.3	8	27,000	25 x 30	60	3.52	3.0	0.029	ELH279M6R3AR2(1)
6.3	8	33,000	25 x 35	60	4.02	3.0	0.024	ELH339M6R3AR3(1)
6.3	8	39,000	25 x 40	60	4.50	3.0	0.020	ELH399M6R3AR4(1)
6.3	8	47,000	25 x 45	60	5.09	3.0	0.017	ELH479M6R3AR5(1)
6.3	8	56,000	25 x 50	60	5.71	3.0	0.014	ELH569M6R3AR6(1)
6.3	8	27,000	30 x 25	60	3.57	3.0	0.029	ELH279M6R3AS1(1)
6.3	8	33,000	30 x 30	60	4.05	3.0	0.024	ELH339M6R3AS2(1)
6.3	8	39,000	30 x 30	60	4.46	3.0	0.020	ELH399M6R3AS2(1)
6.3	8	47,000	30 x 35	60	5.06	3.0	0.017	ELH479M6R3AS3(1)
6.3	8	56,000	30 x 40	60	5.70	3.0	0.014	ELH569M6R3AS4(1)
6.3	8	68,000	30 x 45	60	6.48	3.0	0.012	ELH689M6R3AS5(1)
6.3	8	82,000	30 x 50	60	7.32	3.0	0.010	ELH829M6R3AS6(1)
6.3	8	33,000	35 x 25	60	4.10	3.0	0.024	ELH339M6R3AT1(1)
6.3	8	39,000	35 x 25	60	4.51	3.0	0.020	ELH399M6R3AT1(1)
6.3	8	47,000	35 x 30	60	5.03	3.0	0.017	ELH479M6R3AT2(1)
6.3	8	56,000	35 x 30	60	5.75	3.0	0.014	ELH569M6R3AT2(1)
6.3	8	68,000	35 x 35	60	6.42	3.0	0.012	ELH689M6R3AT3(1)
6.3	8	82,000	35 x 40	60	7.29	3.0	0.010	ELH829M6R3AT4(1)
6.3	8	100,000	35 x 45	60	8.31	3.0	0.008	ELH10KM6R3AT5(1)
6.3	8	120,000	35 x 50	60	8.60	3.0	0.007	ELH12KM6R3AT6(1)
10	13	12,000	22 x 25	55	2.40	2.4	0.061	ELH129M010AQ1(1)
10	13	15,000	22 x 30	55	2.75	3.0	0.049	ELH159M010AQ2(1)
10	13	18,000	22 x 35	55	3.15	3.0	0.041	ELH189M010AQ3(1)
10	13	22,000	22 x 40	55	3.55	3.0	0.033	ELH229M010AQ4(1)
10	13	27,000	22 x 45	55	4.05	3.0	0.027	ELH279M010AQ5(1)
10	13	33,000	22 x 50	55	4.60	3.0	0.022	ELH339M010AQ6(1)
10	13	15,000	25 x 25	55	2.75	3.0	0.049	ELH159M010AR1(1)
10	13	18,000	25 x 25	55	3.05	3.0	0.041	ELH189M010AR1(1)
10	13	22,000	25 x 30	55	3.50	3.0	0.033	ELH229M010AR2(1)
10	13	27,000	25 x 35	55	4.00	3.0	0.027	ELH279M010AR3(1)
10	13	33,000	25 x 40	55	4.55	3.0	0.022	ELH339M010AR4(1)
10	13	39,000	25 x 45	55	5.10	3.0	0.019	ELH399M010AR5(1)
10	13	47,000	25 x 50	55	5.75	3.0	0.016	ELH479M010AR6(1)
10	13	22,000	30 x 25	55	3.55	3.0	0.033	ELH229M010AS1(1)
10	13	27,000	30 x 30	55	4.05	3.0	0.027	ELH279M010AS2(1)
10	13	33,000	30 x 30	55	4.50	3.0	0.022	ELH339M010AS2(1)
10	13	39,000	30 x 35	55	5.05	3.0	0.019	ELH399M010AS3(1)
10	13	47,000	30 x 40	55	5.70	3.0	0.016	ELH479M010AS4(1)
10	13	56,000	30 x 45	55	6.45	3.0	0.013	ELH569M010AS5(1)
10	13	68,000	30 x 50	55	7.05	3.0	0.011	ELH689M010AS6(1)
10	13	33,000	35 x 25	55	4.50	3.0	0.022	ELH339M010AT1(1)
10	13	39,000	35 x 30	55	5.05	3.0	0.019	ELH399M010AT2(1)
10	13	47,000	35 x 30	55	5.65	3.0	0.016	ELH479M010AT2(1)
10	13	56,000	35 x 35	55	6.40	3.0	0.013	ELH569M010AT3(1)
10	13	68,000	35 x 40	55	7.10	3.0	0.011	ELH689M010AT4(1)
10	13	82,000	35 x 50	55	7.50	3.0	0.009	ELH829M010AT6(1)
16	20	8,200	22 x 25	55	2.60	2.6	0.089	ELH828M016AQ1(1)
16	20	10,000	22 x 30	55	2.70	3.0	0.073	ELH109M016AQ2(1)
16	20	12,000	22 x 30	55	2.90	3.0	0.061	ELH129M016AQ2(1)
Rated Voltage	Surge Voltage	Rated Capacitance	Case Size	DF	RC	LC	ESR	Part Number

(1) Insert packaging code. See Ordering Options Table for available options.
** When capacitance exceeds 1,000 µF, the DF value (%) is increased by 2% for every additional 1,000 µF.*

Downloaded from Arrow.com.

Table 1 – Ratings & Part Number Reference cont.

Rated Voltage	Surge Voltage	Rated Capacitance	Case Size	DF	RC	LC	ESR	Part Number
(VDC)	(VDC)	120 Hz 20°C (µF)	D x L (mm)	120 Hz 20°C (tanδ %)*	120 Hz 85°C (A)	20°C 5 minutes (mA)	120 Hz 20°C (Ω)	( ) Represents Part Number Options
16	20	15,000	22 x 35	55	3.30	3.0	0.049	ELH159M016AQ3(1)
16	20	18,000	22 x 40	55	3.70	3.0	0.041	ELH189M016AQ4(1)
16	20	22,000	22 x 50	55	4.35	3.0	0.033	ELH229M016AQ6(1)
16	20	10,000	25 x 25	55	2.75	3.0	0.073	ELH109M016AR1(1)
16	20	12,000	25 x 25	55	2.95	3.0	0.061	ELH129M016AR1(1)
16	20	15,000	25 x 30	55	3.45	3.0	0.049	ELH159M016AR2(1)
16	20	18,000	25 x 35	55	3.75	3.0	0.041	ELH189M016AR3(1)
16	20	22,000	25 x 40	55	4.30	3.0	0.033	ELH229M016AR4(1)
16	20	27,000	25 x 45	55	4.70	3.0	0.027	ELH279M016AR5(1)
16	20	15,000	30 x 25	55	3.50	3.0	0.049	ELH159M016AS1(1)
16	20	18,000	30 x 30	55	3.80	3.0	0.041	ELH189M016AS2(1)
16	20	22,000	30 x 30	55	4.25	3.0	0.033	ELH229M016AS2(1)
16	20	27,000	30 x 35	55	4.65	3.0	0.027	ELH279M016AS3(1)
16	20	33,000	30 x 40	55	5.35	3.0	0.022	ELH339M016AS4(1)
16	20	39,000	30 x 45	55	6.00	3.0	0.019	ELH399M016AS5(1)
16	20	47,000	30 x 50	55	6.80	3.0	0.016	ELH479M016AS6(1)
16	20	22,000	35 x 25	55	4.20	3.0	0.033	ELH229M016AT1(1)
16	20	27,000	35 x 30	55	4.65	3.0	0.027	ELH279M016AT2(1)
16	20	33,000	35 x 30	55	5.40	3.0	0.022	ELH339M016AT2(1)
16	20	39,000	35 x 35	55	5.95	3.0	0.019	ELH399M016AT3(1)
16	20	47,000	35 x 40	55	6.75	3.0	0.016	ELH479M016AT4(1)
16	20	56,000	35 x 45	55	7.60	3.0	0.013	ELH569M016AT5(1)
16	20	68,000	35 x 50	55	8.00	3.0	0.011	ELH689M016AT6(1)
16	20	82,000	35 x 60	55	8.50	3.0	0.009	ELH829M016AT8(1)
25	32	5,600	22 x 25	45	2.20	2.8	0.107	ELH568M025AQ1(1)
25	32	6,800	22 x 30	45	2.40	3.0	0.088	ELH688M025AQ2(1)
25	32	8,200	22 x 35	45	2.70	3.0	0.073	ELH828M025AQ3(1)
25	32	10,000	22 x 40	45	3.10	3.0	0.060	ELH109M025AQ4(1)
25	32	12,000	22 x 45	45	3.50	3.0	0.050	ELH129M025AQ5(1)
25	32	15,000	22 x 50	45	4.00	3.0	0.040	ELH159M025AQ6(1)
25	32	6,800	25 x 25	45	2.45	3.0	0.088	ELH688M025AR1(1)
25	32	8,200	25 x 25	45	2.75	3.0	0.073	ELH828M025AR1(1)
25	32	10,000	25 x 30	45	3.15	3.0	0.060	ELH109M025AR2(1)
25	32	12,000	25 x 35	45	3.45	3.0	0.050	ELH129M025AR3(1)
25	32	15,000	25 x 40	45	3.95	3.0	0.040	ELH159M025AR4(1)
25	32	18,000	25 x 45	45	4.45	3.0	0.033	ELH189M025AR5(1)
25	32	10,000	30 x 25	45	3.20	3.0	0.060	ELH109M025AS1(1)
25	32	12,000	30 x 30	45	3.50	3.0	0.050	ELH129M025AS2(1)
25	32	15,000	30 x 35	45	4.00	3.0	0.040	ELH159M025AS3(1)
25	32	18,000	30 x 35	45	4.45	3.0	0.033	ELH189M025AS3(1)
25	32	22,000	30 x 40	45	5.20	3.0	0.027	ELH229M025AS4(1)
25	32	27,000	30 x 50	45	6.70	3.0	0.022	ELH279M025AS6(1)
25	32	12,000	35 x 25	45	3.55	3.0	0.050	ELH129M025AT1(1)
25	32	15,000	35 x 30	45	4.05	3.0	0.040	ELH159M025AT2(1)
25	32	18,000	35 x 30	45	4.60	3.0	0.033	ELH189M025AT2(1)
25	32	22,000	35 x 35	45	5.15	3.0	0.027	ELH229M025AT3(1)
25	32	22,000	35 x 40	45	5.95	3.0	0.027	ELH229M025AS5(1)
25	32	22,000	35 x 40	45	5.90	3.0	0.027	ELH229M025AT4(1)
25	32	27,000	35 x 45	45	6.75	3.0	0.022	ELH279M025AT5(1)
25	32	39,000	35 x 45	45	7.56	3.0	0.015	ELH399M025AT5(1)
25	32	33,000	35 x 50	45	7.55	3.0	0.018	ELH339M025AT6(1)
25	32	47,000	35 x 50	45	8.30	3.0	0.013	ELH479M025AT6(1)
35	44	3,900	22 x 25	35	2.20	2.7	0.119	ELH398M035AQ1(1)
35	44	4,700	22 x 30	35	2.40	3.0	0.099	ELH478M035AQ2(1)
35	44	5,600	22 x 35	35	2.75	3.0	0.083	ELH568M035AQ3(1)
35	44	6,800	22 x 40	35	2.85	3.0	0.068	ELH688M035AQ4(1)
35	44	8,200	22 x 45	35	3.15	3.0	0.057	ELH828M035AQ5(1)
Rated Voltage	Surge Voltage	Rated Capacitance	Case Size	DF	RC	LC	ESR	Part Number

(1) Insert packaging code. See Ordering Options Table for available options.
** When capacitance exceeds 1,000 µF, the DF value (%) is increased by 2% for every additional 1,000 µF.*

Downloaded from Arrow.com.

Table 1 – Ratings & Part Number Reference cont.

Rated Voltage	Surge Voltage	Rated Capacitance	Case Size	DF	RC	LC	ESR	Part Number
(VDC)	(VDC)	120 Hz 20°C (µF)	D x L (mm)	120 Hz 20°C (tanδ %)*	120 Hz 85°C (A)	20°C 5 minutes (mA)	120 Hz 20°C (Ω)	( ) Represents Part Number Options
35	44	10,000	22 x 50	35	3.55	3.0	0.046	ELH109M035AQ6(1)
35	44	4,700	25 x 25	35	2.40	3.0	0.099	ELH478M035AR1(1)
35	44	5,600	25 x 25	35	2.75	3.0	0.083	ELH568M035AR1(1)
35	44	6,800	25 x 30	35	2.85	3.0	0.068	ELH688M035AR2(1)
35	44	8,200	25 x 35	35	3.10	3.0	0.057	ELH828M035AR3(1)
35	44	10,000	25 x 40	35	3.50	3.0	0.046	ELH109M035AR4(1)
35	44	12,000	25 x 45	35	3.95	3.0	0.039	ELH129M035AR5(1)
35	44	15,000	25 x 50	35	4.95	3.0	0.031	ELH159M035AR6(1)
35	44	6,800	30 x 25	35	2.90	3.0	0.068	ELH688M035AS1(1)
35	44	8,200	30 x 30	35	3.15	3.0	0.057	ELH828M035AS2(1)
35	44	10,000	30 x 30	35	3.45	3.0	0.046	ELH109M035AS2(1)
35	44	12,000	30 x 35	35	4.00	3.0	0.039	ELH129M035AS3(1)
35	44	15,000	30 x 40	35	4.95	3.0	0.031	ELH159M035AS4(1)
35	44	18,000	30 x 45	35	5.50	3.0	0.026	ELH189M035AS5(1)
35	44	22,000	30 x 50	35	6.00	3.0	0.021	ELH229M035AS6(1)
35	44	10,000	35 x 25	35	3.40	3.0	0.046	ELH109M035AT1(1)
35	44	12,000	35 x 30	35	4.05	3.0	0.039	ELH129M035AT2(1)
35	44	15,000	35 x 35	35	5.00	3.0	0.031	ELH159M035AT3(1)
35	44	18,000	35 x 40	35	5.55	3.0	0.026	ELH189M035AT4(1)
35	44	22,000	35 x 45	35	6.05	3.0	0.021	ELH229M035AT5(1)
35	44	27,000	35 x 50	35	6.90	3.0	0.017	ELH279M035AT6(1)
50	63	2,200	22 x 25	30	1.90	2.2	0.181	ELH228M050AQ1(1)
50	63	2,700	22 x 30	30	2.10	2.7	0.147	ELH278M050AQ2(1)
50	63	3,300	22 x 30	30	2.35	3.0	0.121	ELH338M050AQ2(1)
50	63	3,900	22 x 35	30	2.65	3.0	0.102	ELH398M050AQ3(1)
50	63	4,700	22 x 40	30	3.00	3.0	0.085	ELH478M050AQ4(1)
50	63	5,600	22 x 45	30	3.35	3.0	0.071	ELH568M050AQ5(1)
50	63	6,800	22 x 50	30	3.80	3.0	0.059	ELH688M050AQ6(1)
50	63	2,700	25 x 25	30	2.20	2.7	0.147	ELH278M050AR1(1)
50	63	3,300	25 x 25	30	2.35	3.0	0.121	ELH338M050AR1(1)
50	63	3,900	25 x 30	30	2.65	3.0	0.102	ELH398M050AR2(1)
50	63	4,700	25 x 35	30	3.00	3.0	0.085	ELH478M050AR3(1)
50	63	5,600	25 x 40	30	3.35	3.0	0.071	ELH568M050AR4(1)
50	63	6,800	25 x 40	30	3.80	3.0	0.059	ELH688M050AR4(1)
50	63	8,200	25 x 50	30	4.35	3.0	0.049	ELH828M050AR6(1)
50	63	3,900	30 x 25	30	2.65	3.0	0.102	ELH398M050AS1(1)
50	63	4,700	30 x 25	30	2.95	3.0	0.085	ELH478M050AS1(1)
50	63	5,600	30 x 30	30	3.35	3.0	0.071	ELH568M050AS2(1)
50	63	6,800	30 x 30	30	3.80	3.0	0.059	ELH688M050AS2(1)
50	63	6,800	30 x 35	30	3.85	3.0	0.059	ELH688M050AS3(1)
50	63	8,200	30 x 40	30	4.35	3.0	0.049	ELH828M050AS4(1)
50	63	10,000	30 x 45	30	5.00	3.0	0.040	ELH109M050AS5(1)
50	63	12,000	30 x 50	30	5.60	3.0	0.033	ELH129M050AS6(1)
50	63	5,600	35 x 25	30	3.40	3.0	0.071	ELH568M050AT1(1)
50	63	6,800	35 x 30	30	3.85	3.0	0.059	ELH688M050AT2(1)
50	63	8,200	35 x 30	30	4.40	3.0	0.049	ELH828M050AT2(1)
50	63	10,000	35 x 35	30	4.95	3.0	0.040	ELH109M050AT3(1)
50	63	12,000	35 x 40	30	5.55	3.0	0.033	ELH129M050AT4(1)
50	63	15,000	35 x 45	30	6.45	3.0	0.027	ELH159M050AT5(1)
50	63	18,000	35 x 50	30	6.70	3.0	0.022	ELH189M050AT6(1)
63	79	1,800	22 x 25	25	1.85	2.3	0.184	ELH188M063AQ1(1)
63	79	2,200	22 x 30	25	2.30	2.8	0.151	ELH228M063AQ2(1)
63	79	2,700	22 x 35	25	2.45	3.0	0.123	ELH278M063AQ3(1)
63	79	3,300	22 x 40	25	2.60	3.0	0.101	ELH338M063AQ4(1)
63	79	3,900	22 x 45	25	2.95	3.0	0.085	ELH398M063AQ5(1)
63	79	4,700	22 x 50	25	3.40	3.0	0.071	ELH478M063AQ6(1)
63	79	2,200	25 x 25	25	2.30	2.8	0.151	ELH228M063AR1(1)
Rated Voltage	Surge Voltage	Rated Capacitance	Case Size	DF	RC	LC	ESR	Part Number

(1) Insert packaging code. See Ordering Options Table for available options.
** When capacitance exceeds 1,000 µF, the DF value (%) is increased by 2% for every additional 1,000 µF.*

Downloaded from Arrow.com.

Table 1 – Ratings & Part Number Reference cont.

Rated Voltage	Surge Voltage	Rated Capacitance	Case Size	DF	RC	LC	ESR	Part Number
(VDC)	(VDC)	120 Hz 20°C (µF)	D x L (mm)	120 Hz 20°C (tanδ %)*	120 Hz 85°C (A)	20°C 5 minutes (mA)	120 Hz 20°C (Ω)	( ) Represents Part Number Options
63	79	2,700	25 x 30	25	2.45	3.0	0.123	ELH278M063AR2(1)
63	79	3,300	25 x 30	25	2.65	3.0	0.101	ELH338M063AR2(1)
63	79	3,900	25 x 35	25	2.95	3.0	0.085	ELH398M063AR3(1)
63	79	4,700	25 x 40	25	3.35	3.0	0.071	ELH478M063AR4(1)
63	79	5,600	25 x 45	25	3.70	3.0	0.059	ELH568M063AR5(1)
63	79	2,700	30 x 25	25	2.50	3.0	0.123	ELH278M063AS1(1)
63	79	3,300	30 x 25	25	2.70	3.0	0.101	ELH338M063AS1(1)
63	79	3,900	30 x 30	25	3.00	3.0	0.085	ELH398M063AS2(1)
63	79	4,700	30 x 30	25	3.35	3.0	0.071	ELH478M063AS2(1)
63	79	5,600	30 x 35	25	3.75	3.0	0.059	ELH568M063AS3(1)
63	79	6,800	30 x 40	25	4.25	3.0	0.049	ELH688M063AS4(1)
63	79	8,200	30 x 45	25	4.80	3.0	0.040	ELH828M063AS5(1)
63	79	10,000	30 x 50	25	5.50	3.0	0.033	ELH109M063AS6(1)
63	79	4,700	35 x 25	25	3.40	3.0	0.071	ELH478M063AT1(1)
63	79	5,600	35 x 30	25	3.75	3.0	0.059	ELH568M063AT2(1)
63	79	6,800	35 x 30	25	4.20	3.0	0.049	ELH688M063AT2(1)
63	79	8,200	35 x 35	25	4.80	3.0	0.040	ELH828M063AT3(1)
63	79	10,000	35 x 40	25	5.45	3.0	0.033	ELH109M063AT4(1)
63	79	12,000	35 x 45	25	6.20	3.0	0.028	ELH129M063AT5(1)
80	100	1,200	22 x 25	25	1.65	1.9	0.276	ELH128M080AQ1(1)
80	100	1,500	22 x 30	25	1.90	2.4	0.221	ELH158M080AQ2(1)
80	100	1,800	22 x 35	25	2.20	2.9	0.184	ELH188M080AQ3(1)
80	100	2,200	22 x 40	25	2.45	3.0	0.151	ELH228M080AQ4(1)
80	100	2,700	22 x 45	25	2.80	3.0	0.123	ELH278M080AQ5(1)
80	100	3,300	22 x 50	25	3.15	3.0	0.101	ELH338M080AQ6(1)
80	100	1,500	25 x 25	25	1.90	2.4	0.221	ELH158M080AR1(1)
80	100	1,800	25 x 30	25	2.20	2.9	0.184	ELH188M080AR2(1)
80	100	2,200	25 x 30	25	2.45	3.0	0.151	ELH228M080AR2(1)
80	100	2,700	25 x 35	25	2.80	3.0	0.123	ELH278M080AR3(1)
80	100	3,300	25 x 40	25	3.20	3.0	0.101	ELH338M080AR4(1)
80	100	3,900	25 x 45	25	3.60	3.0	0.085	ELH398M080AR5(1)
80	100	4,700	25 x 50	25	4.05	3.0	0.071	ELH478M080AR6(1)
80	100	1,800	30 x 25	25	2.20	2.9	0.184	ELH188M080AS1(1)
80	100	2,200	30 x 25	25	2.50	3.0	0.151	ELH228M080AS1(1)
80	100	2,700	30 x 30	25	2.85	3.0	0.123	ELH278M080AS2(1)
80	100	3,300	30 x 30	25	3.20	3.0	0.101	ELH338M080AS2(1)
80	100	3,900	30 x 35	25	3.60	3.0	0.085	ELH398M080AS3(1)
80	100	4,700	30 x 40	25	4.05	3.0	0.071	ELH478M080AS4(1)
80	100	5,600	30 x 45	25	4.55	3.0	0.059	ELH568M080AS5(1)
80	100	6,800	30 x 50	25	5.15	3.0	0.049	ELH688M080AS6(1)
80	100	2,700	35 x 25	25	2.85	3.0	0.123	ELH278M080AT1(1)
80	100	3,300	35 x 25	25	3.20	3.0	0.101	ELH338M080AT1(1)
80	100	3,900	35 x 30	25	3.60	3.0	0.085	ELH398M080AT2(1)
80	100	4,700	35 x 35	25	4.10	3.0	0.071	ELH478M080AT3(1)
80	100	5,600	35 x 35	25	4.50	3.0	0.059	ELH568M080AT3(1)
80	100	6,800	35 x 40	25	5.15	3.0	0.049	ELH688M080AT4(1)
80	100	8,200	35 x 45	25	5.85	3.0	0.040	ELH828M080AT5(1)
80	100	10,000	35 x 50	25	6.60	3.0	0.033	ELH109M080AT6(1)
100	125	820	22 x 25	25	1.85	1.6	0.405	ELH827M100AQ1(1)
100	125	1,000	22 x 30	25	2.10	2.0	0.332	ELH108M100AQ2(1)
100	125	1,200	22 x 35	25	2.40	2.4	0.276	ELH128M100AQ3(1)
100	125	1,500	22 x 40	25	2.70	3.0	0.221	ELH158M100AQ4(1)
100	125	1,800	22 x 45	25	3.10	3.0	0.184	ELH188M100AQ5(1)
100	125	2,200	22 x 50	25	3.50	3.0	0.151	ELH228M100AQ6(1)
100	125	1,000	25 x 25	25	2.10	2.0	0.332	ELH108M100AR1(1)
100	125	1,200	25 x 30	25	2.45	2.4	0.276	ELH128M100AR2(1)
100	125	1,500	25 x 30	25	2.75	3.0	0.221	ELH158M100AR2(1)
Rated Voltage	Surge Voltage	Rated Capacitance	Case Size	DF	RC	LC	ESR	Part Number

(1) Insert packaging code. See Ordering Options Table for available options.
** When capacitance exceeds 1,000 µF, the DF value (%) is increased by 2% for every additional 1,000 µF.*

Downloaded from Arrow.com.

Table 1 – Ratings & Part Number Reference cont.

Rated Voltage	Surge Voltage	Rated Capacitance	Case Size	DF	RC	LC	ESR	Part Number
(VDC)	(VDC)	120 Hz 20°C (µF)	D x L (mm)	120 Hz 20°C (tanδ %)*	120 Hz 85°C (A)	20°C 5 minutes (mA)	120 Hz 20°C (Ω)	( ) Represents Part Number Options
100	125	1,800	25 x 35	25	3.15	3.0	0.184	ELH188M100AR3(1)
100	125	2,200	25 x 40	25	3.55	3.0	0.151	ELH228M100AR4(1)
100	125	2,700	25 x 45	25	4.10	3.0	0.123	ELH278M100AR5(1)
100	125	3,300	25 x 50	25	4.50	3.0	0.101	ELH338M100AR6(1)
100	125	1,500	30 x 25	25	2.75	3.0	0.221	ELH158M100AS1(1)
100	125	1,800	30 x 30	25	3.15	3.0	0.184	ELH188M100AS2(1)
100	125	2,200	30 x 30	25	3.55	3.0	0.151	ELH228M100AS2(1)
100	125	2,700	30 x 35	25	4.05	3.0	0.123	ELH278M100AS3(1)
100	125	3,300	30 x 40	25	4.55	3.0	0.101	ELH338M100AS4(1)
100	125	3,900	30 x 45	25	5.15	3.0	0.085	ELH398M100AS5(1)
100	125	1,800	35 x 25	25	3.15	3.0	0.184	ELH188M100AT1(1)
100	125	2,200	35 x 25	25	3.60	3.0	0.151	ELH228M100AT1(1)
100	125	2,700	35 x 30	25	4.05	3.0	0.123	ELH278M100AT2(1)
100	125	3,300	35 x 30	25	4.50	3.0	0.101	ELH338M100AT2(1)
100	125	3,900	35 x 35	25	5.10	3.0	0.085	ELH398M100AT3(1)
100	125	4,700	35 x 40	25	5.75	3.0	0.071	ELH478M100AT4(1)
100	125	5,600	35 x 50	25	6.20	3.0	0.059	ELH568M100AT6(1)
160	200	270	22 x 25	15	1.15	0.9	0.737	ELH277M160AQ1(1)
160	200	330	22 x 25	15	1.40	1.0	0.603	ELH337M160AQ1(1)
160	200	390	22 x 30	15	1.55	1.2	0.510	ELH397M160AQ2(1)
160	200	470	22 x 30	15	1.75	1.5	0.423	ELH477M160AQ2(1)
160	200	560	22 x 30	15	1.95	1.8	0.355	ELH567M160AQ2(1)
160	200	680	22 x 40	15	2.20	2.2	0.293	ELH687M160AQ4(1)
160	200	820	22 x 45	15	2.50	2.6	0.243	ELH827M160AQ5(1)
160	200	1,000	22 x 50	15	2.85	3.0	0.199	ELH108M160AQ6(1)
160	200	330	25 x 20	15	1.35	1.0	0.603	ELH337M160AR7(1)
160	200	390	25 x 25	15	1.55	1.2	0.510	ELH397M160AR1(1)
160	200	470	25 x 25	15	1.75	1.5	0.423	ELH477M160AR1(1)
160	200	560	25 x 30	15	1.95	1.8	0.355	ELH567M160AR2(1)
160	200	680	25 x 30	15	2.20	2.2	0.293	ELH687M160AR2(1)
160	200	820	25 x 35	15	2.55	2.6	0.243	ELH827M160AR3(1)
160	200	1,000	25 x 40	15	2.80	3.0	0.199	ELH108M160AR4(1)
160	200	1,200	25 x 45	15	3.15	3.0	0.166	ELH128M160AR5(1)
160	200	390	30 x 25	15	1.50	1.2	0.510	ELH397M160AS1(1)
160	200	470	30 x 25	15	1.70	1.5	0.423	ELH477M160AS1(1)
160	200	560	30 x 25	15	1.90	1.8	0.355	ELH567M160AS1(1)
160	200	680	30 x 25	15	2.15	2.2	0.293	ELH687M160AS1(1)
160	200	820	30 x 30	15	2.50	2.6	0.243	ELH827M160AS2(1)
160	200	1,000	30 x 30	15	2.80	3.0	0.199	ELH108M160AS2(1)
160	200	1,000	30 x 35	15	2.80	3.0	0.199	ELH108M160AS3(1)
160	200	1,200	30 x 35	15	3.15	3.0	0.166	ELH128M160AS3(1)
160	200	1,500	30 x 45	15	3.75	3.0	0.133	ELH158M160AS5(1)
160	200	1,800	30 x 50	15	4.20	3.0	0.111	ELH188M160AS6(1)
160	200	820	35 x 25	15	2.50	2.6	0.243	ELH827M160AT1(1)
160	200	1,000	35 x 25	15	2.80	3.0	0.199	ELH108M160AT1(1)
160	200	1,200	35 x 30	15	3.20	3.0	0.166	ELH128M160AT2(1)
160	200	1,500	35 x 30	15	3.70	3.0	0.133	ELH158M160AT2(1)
160	200	1,500	35 x 35	15	3.70	3.0	0.133	ELH158M160AT3(1)
160	200	1,800	35 x 40	15	4.20	3.0	0.111	ELH188M160AT4(1)
160	200	2,200	35 x 40	15	4.60	3.0	0.090	ELH228M160AT4(1)
160	200	2,200	35 x 45	15	4.80	3.0	0.090	ELH228M160AT5(1)
160	200	2,700	35 x 50	15	5.45	3.0	0.074	ELH278M160AT6(1)
180	225	180	22 x 20	15	1.00	0.6	1.106	ELH187M180AQ7(1)
180	225	220	22 x 25	15	1.10	0.8	0.905	ELH227M180AQ1(1)
180	225	270	22 x 25	15	1.25	1.0	0.737	ELH277M180AQ1(1)
180	225	330	22 x 25	15	1.40	1.2	0.603	ELH337M180AQ1(1)
180	225	330	22 x 30	15	1.40	1.2	0.603	ELH337M180AQ2(1)
Rated Voltage	Surge Voltage	Rated Capacitance	Case Size	DF	RC	LC	ESR	Part Number

(1) Insert packaging code. See Ordering Options Table for available options.
** When capacitance exceeds 1,000 µF, the DF value (%) is increased by 2% for every additional 1,000 µF.*

Downloaded from Arrow.com.

Table 1 – Ratings & Part Number Reference cont.

Rated Voltage	Surge Voltage	Rated Capacitance	Case Size	DF	RC	LC	ESR	Part Number
(VDC)	(VDC)	120 Hz 20°C (µF)	D x L (mm)	120 Hz 20°C (tanδ %)*	120 Hz 85°C (A)	20°C 5 minutes (mA)	120 Hz 20°C (Ω)	( ) Represents Part Number Options
180	225	390	22 x 30	15	1.60	1.4	0.510	ELH397M180AQ2(1)
180	225	470	22 x 35	15	1.80	1.7	0.423	ELH477M180AQ3(1)
180	225	560	22 x 35	15	2.00	2.0	0.355	ELH567M180AQ3(1)
180	225	560	22 x 40	15	2.00	2.0	0.355	ELH567M180AQ4(1)
180	225	680	22 x 45	15	2.25	2.4	0.293	ELH687M180AQ5(1)
180	225	820	22 x 50	15	2.55	2.9	0.243	ELH827M180AQ6(1)
180	225	270	25 x 20	15	1.25	1.0	0.737	ELH277M180AR7(1)
180	225	330	25 x 25	15	1.40	1.2	0.603	ELH337M180AR1(1)
180	225	390	25 x 25	15	1.60	1.4	0.510	ELH397M180AR1(1)
180	225	470	25 x 30	15	1.80	1.7	0.423	ELH477M180AR2(1)
180	225	560	25 x 30	15	1.95	2.0	0.355	ELH567M180AR2(1)
180	225	680	25 x 35	15	2.20	2.4	0.293	ELH687M180AR3(1)
180	225	820	25 x 40	15	2.55	2.9	0.243	ELH827M180AR4(1)
180	225	1,000	25 x 45	15	2.85	3.0	0.199	ELH108M180AR5(1)
180	225	470	30 x 25	15	1.80	1.7	0.423	ELH477M180AS1(1)
180	225	560	30 x 25	15	2.00	2.0	0.355	ELH567M180AS1(1)
180	225	680	30 x 30	15	2.20	2.4	0.293	ELH687M180AS2(1)
180	225	820	30 x 30	15	2.60	2.9	0.243	ELH827M180AS2(1)
180	225	820	30 x 35	15	2.60	2.9	0.243	ELH827M180AS3(1)
180	225	1,000	30 x 35	15	2.85	3.0	0.199	ELH108M180AS3(1)
180	225	1,200	30 x 40	15	3.25	3.0	0.166	ELH128M180AS4(1)
180	225	1,500	30 x 45	15	3.85	3.0	0.133	ELH158M180AS5(1)
180	225	680	35 x 25	15	2.20	2.4	0.293	ELH687M180AT1(1)
180	225	820	35 x 25	15	2.60	2.9	0.243	ELH827M180AT1(1)
180	225	1,000	35 x 30	15	2.90	3.0	0.199	ELH108M180AT2(1)
180	225	1,200	35 x 30	15	3.30	3.0	0.166	ELH128M180AT2(1)
180	225	1,200	35 x 35	15	3.30	3.0	0.166	ELH128M180AT3(1)
180	225	1,500	35 x 35	15	3.80	3.0	0.133	ELH158M180AT3(1)
180	225	1,500	35 x 40	15	3.80	3.0	0.133	ELH158M180AT4(1)
180	225	1,800	35 x 40	15	4.30	3.0	0.111	ELH188M180AT4(1)
180	225	1,800	35 x 45	15	4.30	3.0	0.111	ELH188M180AT5(1)
180	225	2,200	35 x 45	15	4.90	3.0	0.090	ELH228M180AT5(1)
180	225	2,200	35 x 50	15	4.90	3.0	0.090	ELH228M180AT6(1)
200	250	180	22 x 25	15	0.95	0.7	1.106	ELH187M200AQ1(1)
200	250	220	22 x 25	15	1.10	0.9	0.905	ELH227M200AQ1(1)
200	250	270	22 x 25	15	1.25	1.1	0.737	ELH277M200AQ1(1)
200	250	330	22 x 25	15	1.45	1.3	0.603	ELH337M200AQ1(1)
200	250	270	22 x 30	15	1.25	1.1	0.737	ELH277M200AQ2(1)
200	250	330	22 x 30	15	1.45	1.3	0.603	ELH337M200AQ2(1)
200	250	390	22 x 30	15	1.60	1.6	0.510	ELH397M200AQ2(1)
200	250	470	22 x 35	15	1.80	1.9	0.423	ELH477M200AQ3(1)
200	250	560	22 x 40	15	2.00	2.2	0.355	ELH567M200AQ4(1)
200	250	680	22 x 45	15	2.35	2.7	0.293	ELH687M200AQ5(1)
200	250	270	25 x 25	15	1.25	1.1	0.737	ELH277M200AR1(1)
200	250	330	25 x 25	15	1.45	1.3	0.603	ELH337M200AR1(1)
200	250	390	25 x 25	15	1.55	1.6	0.510	ELH397M200AR1(1)
200	250	470	25 x 30	15	1.80	1.9	0.423	ELH477M200AR2(1)
200	250	560	25 x 35	15	2.00	2.2	0.355	ELH567M200AR3(1)
200	250	680	25 x 35	15	2.30	2.7	0.293	ELH687M200AR3(1)
200	250	820	25 x 40	15	2.60	3.0	0.243	ELH827M200AR4(1)
200	250	820	25 x 45	15	2.60	3.0	0.243	ELH827M200AR5(1)
200	250	1,000	25 x 45	15	3.00	3.0	0.199	ELH108M200AR5(1)
200	250	1,000	25 x 50	15	3.00	3.0	0.199	ELH108M200AR6(1)
200	250	1,200	25 x 50	15	3.30	3.0	0.166	ELH128M200AR6(1)
200	250	470	30 x 25	15	1.80	1.9	0.423	ELH477M200AS1(1)
200	250	560	30 x 25	15	2.00	2.2	0.355	ELH567M200AS1(1)
200	250	680	30 x 30	15	2.30	2.7	0.293	ELH687M200AS2(1)
Rated Voltage	Surge Voltage	Rated Capacitance	Case Size	DF	RC	LC	ESR	Part Number

(1) Insert packaging code. See Ordering Options Table for available options.
** When capacitance exceeds 1,000 µF, the DF value (%) is increased by 2% for every additional 1,000 µF.*

Downloaded from Arrow.com.

Table 1 – Ratings & Part Number Reference cont.

Rated Voltage	Surge Voltage	Rated Capacitance	Case Size	DF	RC	LC	ESR	Part Number
(VDC)	(VDC)	120 Hz 20°C (µF)	D x L (mm)	120 Hz 20°C (tanδ %)*	120 Hz 85°C (A)	20°C 5 minutes (mA)	120 Hz 20°C (Ω)	( ) Represents Part Number Options
200	250	820	30 x 30	15	2.60	3.0	0.243	ELH827M200AS2(1)
200	250	820	30 x 35	15	2.60	3.0	0.243	ELH827M200AS3(1)
200	250	1,000	30 x 35	15	3.05	3.0	0.199	ELH108M200AS3(1)
200	250	1,000	30 x 40	15	3.05	3.0	0.199	ELH108M200AS4(1)
200	250	1,200	30 x 40	15	3.30	3.0	0.166	ELH128M200AS4(1)
200	250	1,200	30 x 45	15	3.30	3.0	0.166	ELH128M200AS5(1)
200	250	1,500	30 x 45	15	3.80	3.0	0.133	ELH158M200AS5(1)
200	250	1,500	30 x 50	15	3.80	3.0	0.133	ELH158M200AS6(1)
200	250	680	35 x 25	15	2.30	2.7	0.293	ELH687M200AT1(1)
200	250	820	35 x 30	15	2.60	3.0	0.243	ELH827M200AT2(1)
200	250	1,000	35 x 30	15	3.00	3.0	0.199	ELH108M200AT2(1)
200	250	1,200	35 x 30	15	3.30	3.0	0.166	ELH128M200AT2(1)
200	250	1,200	35 x 35	15	3.30	3.0	0.166	ELH128M200AT3(1)
200	250	1,500	35 x 35	15	3.80	3.0	0.133	ELH158M200AT3(1)
200	250	1,500	35 x 40	15	3.80	3.0	0.133	ELH158M200AT4(1)
200	250	1,800	35 x 40	15	4.35	3.0	0.111	ELH188M200AT4(1)
200	250	1,800	35 x 45	15	4.35	3.0	0.111	ELH188M200AT5(1)
200	250	2,200	35 x 45	15	4.95	3.0	0.090	ELH228M200AT5(1)
200	250	2,200	35 x 50	15	4.95	3.0	0.090	ELH228M200AT6(1)
250	300	120	22 x 20	15	0.78	0.6	1.659	ELH127M250AQ7(1)
250	300	150	22 x 25	15	0.90	0.7	1.327	ELH157M250AQ1(1)
250	300	180	22 x 25	15	1.05	0.9	1.106	ELH187M250AQ1(1)
250	300	220	22 x 30	15	1.15	1.1	0.905	ELH227M250AQ2(1)
250	300	270	22 x 30	15	1.30	1.3	0.737	ELH277M250AQ2(1)
250	300	330	22 x 30	15	1.50	1.6	0.603	ELH337M250AQ2(1)
250	300	220	22 x 35	15	1.15	1.1	0.905	ELH227M250AQ3(1)
250	300	390	22 x 35	15	1.65	1.9	0.510	ELH397M250AQ3(1)
250	300	470	22 x 40	15	1.85	2.3	0.423	ELH477M250AQ4(1)
250	300	560	22 x 45	15	2.10	2.8	0.355	ELH567M250AQ5(1)
250	300	180	25 x 20	15	1.00	0.9	1.106	ELH187M250AR7(1)
250	300	220	25 x 25	15	1.15	1.1	0.905	ELH227M250AR1(1)
250	300	270	25 x 25	15	1.30	1.3	0.737	ELH277M250AR1(1)
250	300	330	25 x 25	15	1.50	1.6	0.603	ELH337M250AR1(1)
250	300	390	25 x 35	15	1.65	1.9	0.510	ELH397M250AR3(1)
250	300	470	25 x 35	15	1.85	2.3	0.423	ELH477M250AR3(1)
250	300	560	25 x 40	15	2.10	2.8	0.355	ELH567M250AR4(1)
250	300	680	25 x 45	15	2.45	3.0	0.293	ELH687M250AR5(1)
250	300	330	30 x 25	15	1.50	1.6	0.603	ELH337M250AS1(1)
250	300	390	30 x 25	15	1.65	1.9	0.510	ELH397M250AS1(1)
250	300	470	30 x 30	15	1.90	2.3	0.423	ELH477M250AS2(1)
250	300	560	30 x 30	15	2.10	2.8	0.355	ELH567M250AS2(1)
250	300	680	30 x 35	15	2.45	3.0	0.293	ELH687M250AS3(1)
250	300	820	30 x 45	15	2.75	3.0	0.243	ELH827M250AS5(1)
250	300	1,000	30 x 45	15	3.30	3.0	0.199	ELH108M250AS5(1)
250	300	470	35 x 25	15	1.90	2.3	0.423	ELH477M250AT1(1)
250	300	560	35 x 25	15	2.10	2.8	0.355	ELH567M250AT1(1)
250	300	680	35 x 25	15	2.45	3.0	0.293	ELH687M250AT1(1)
250	300	820	35 x 30	15	2.75	3.0	0.243	ELH827M250AT2(1)
250	300	820	35 x 35	15	2.75	3.0	0.243	ELH827M250AT3(1)
250	300	1,000	35 x 35	15	3.30	3.0	0.199	ELH108M250AT3(1)
250	300	1,200	35 x 40	15	3.55	3.0	0.166	ELH128M250AT4(1)
250	300	1,500	35 x 45	15	4.05	3.0	0.133	ELH158M250AT5(1)
350	400	68	22 x 20	15	0.55	0.5	2.927	ELH686M350AQ7(1)
350	400	82	22 x 25	15	0.65	0.6	2.427	ELH826M350AQ1(1)
350	400	100	22 x 30	15	0.90	0.7	1.990	ELH107M350AQ2(1)
350	400	120	22 x 30	15	1.00	0.8	1.659	ELH127M350AQ2(1)
350	400	150	22 x 35	15	1.15	1.0	1.327	ELH157M350AQ3(1)
Rated Voltage	Surge Voltage	Rated Capacitance	Case Size	DF	RC	LC	ESR	Part Number

(1) Insert packaging code. See Ordering Options Table for available options.
** When capacitance exceeds 1,000 µF, the DF value (%) is increased by 2% for every additional 1,000 µF.*

Downloaded from Arrow.com.

Table 1 – Ratings & Part Number Reference cont.

Rated Voltage	Surge Voltage	Rated Capacitance	Case Size	DF	RC	LC	ESR	Part Number
(VDC)	(VDC)	120 Hz 20°C (µF)	D x L (mm)	120 Hz 20°C (tanδ %)*	120 Hz 85°C (A)	20°C 5 minutes (mA)	120 Hz 20°C (Ω)	( ) Represents Part Number Options
350	400	180	22 x 40	15	1.30	1.3	1.106	ELH187M350AQ4(1)
350	400	220	22 x 45	15	1.45	1.5	0.905	ELH227M350AQ5(1)
350	400	82	25 x 20	15	0.65	0.6	2.427	ELH826M350AR7(1)
350	400	100	25 x 20	15	0.90	0.7	1.990	ELH107M350AR7(1)
350	400	120	25 x 25	15	1.00	0.8	1.659	ELH127M350AR1(1)
350	400	150	25 x 30	15	1.15	1.0	1.327	ELH157M350AR2(1)
350	400	180	25 x 30	15	1.25	1.3	1.106	ELH187M350AR2(1)
350	400	220	25 x 35	15	1.45	1.5	0.905	ELH227M350AR3(1)
350	400	270	25 x 40	15	1.65	1.9	0.737	ELH277M350AR4(1)
350	400	330	25 x 50	15	1.80	2.3	0.603	ELH337M350AR6(1)
350	400	150	30 x 25	15	1.15	1.0	1.327	ELH157M350AS1(1)
350	400	180	30 x 25	15	1.25	1.3	1.106	ELH187M350AS1(1)
350	400	220	30 x 30	15	1.45	1.5	0.905	ELH227M350AS2(1)
350	400	270	30 x 35	15	1.65	1.9	0.737	ELH277M350AS3(1)
350	400	330	30 x 40	15	1.80	2.3	0.603	ELH337M350AS4(1)
350	400	390	30 x 40	15	2.00	2.7	0.510	ELH397M350AS4(1)
350	400	470	30 x 45	15	2.25	3.0	0.423	ELH477M350AS5(1)
350	400	220	35 x 25	15	1.45	1.5	0.905	ELH227M350AT1(1)
350	400	270	35 x 25	15	1.65	1.9	0.737	ELH277M350AT1(1)
350	400	330	35 x 30	15	1.80	2.3	0.603	ELH337M350AT2(1)
350	400	390	35 x 30	15	2.00	2.7	0.510	ELH397M350AT2(1)
350	400	470	35 x 35	15	2.25	3.0	0.423	ELH477M350AT3(1)
350	400	560	35 x 40	15	2.50	3.0	0.355	ELH567M350AT4(1)
350	400	680	35 x 45	15	2.90	3.0	0.293	ELH687M350AT5(1)
400	450	56	22 x 20	15	0.55	0.4	3.554	ELH566M400AQ7(1)
400	450	68	22 x 25	15	0.60	0.5	2.927	ELH686M400AQ1(1)
400	450	82	22 x 25	15	0.80	0.6	2.427	ELH826M400AQ1(1)
400	450	100	22 x 25	15	0.85	0.8	1.990	ELH107M400AQ1(1)
400	450	100	22 x 30	15	0.90	0.8	1.990	ELH107M400AQ2(1)
400	450	120	22 x 30	15	0.95	1.0	1.659	ELH127M400AQ2(1)
400	450	120	22 x 35	15	1.05	1.0	1.659	ELH127M400AQ3(1)
400	450	180	22 x 40	15	1.20	1.4	1.106	ELH187M400AQ4(1)
400	450	180	22 x 45	15	1.30	1.4	1.106	ELH187M400AQ5(1)
400	450	220	22 x 50	15	1.50	1.8	0.905	ELH227M400AQ6(1)
400	450	270	22 x 50	15	1.60	2.2	0.737	ELH277M400AQ6(1)
400	450	68	25 x 20	15	0.60	0.5	2.927	ELH686M400AR7(1)
400	450	82	25 x 20	15	0.80	0.6	2.427	ELH826M400AR7(1)
400	450	100	25 x 25	15	0.90	0.8	1.990	ELH107M400AR1(1)
400	450	120	25 x 25	15	1.05	1.0	1.659	ELH127M400AR1(1)
400	450	150	25 x 30	15	1.15	1.2	1.327	ELH157M400AR2(1)
400	450	180	25 x 35	15	1.30	1.4	1.106	ELH187M400AR3(1)
400	450	220	25 x 40	15	1.50	1.8	0.905	ELH227M400AR4(1)
400	450	270	25 x 40	15	1.65	2.2	0.737	ELH277M400AR4(1)
400	450	330	25 x 45	15	1.75	2.6	0.603	ELH337M400AR5(1)
400	450	330	25 x 50	15	1.90	2.6	0.603	ELH337M400AR6(1)
400	450	150	30 x 25	15	1.15	1.2	1.327	ELH157M400AS1(1)
400	450	180	30 x 30	15	1.35	1.4	1.106	ELH187M400AS2(1)
400	450	220	30 x 30	15	1.50	1.8	0.905	ELH227M400AS2(1)
400	450	270	30 x 35	15	1.65	2.2	0.737	ELH277M400AS3(1)
400	450	330	30 x 40	15	1.90	2.6	0.603	ELH337M400AS4(1)
400	450	390	30 x 40	15	1.95	3.0	0.510	ELH397M400AS4(1)
400	450	390	30 x 45	15	2.15	3.0	0.510	ELH397M400AS5(1)
400	450	470	30 x 45	15	2.20	3.0	0.423	ELH477M400AS5(1)
400	450	470	30 x 50	15	2.40	3.0	0.423	ELH477M400AS6(1)
400	450	560	30 x 50	15	2.45	3.0	0.355	ELH567M400AS6(1)
400	450	220	35 x 25	15	1.50	1.8	0.905	ELH227M400AT1(1)
400	450	270	35 x 30	15	1.65	2.2	0.737	ELH277M400AT2(1)
Rated Voltage	Surge Voltage	Rated Capacitance	Case Size	DF	RC	LC	ESR	Part Number

(1) Insert packaging code. See Ordering Options Table for available options.
** When capacitance exceeds 1,000 µF, the DF value (%) is increased by 2% for every additional 1,000 µF.*

Downloaded from Arrow.com.

Table 1 – Ratings & Part Number Reference cont.

Rated Voltage	Surge Voltage	Rated Capacitance	Case Size	DF	RC	LC	ESR	Part Number
(VDC)	(VDC)	120 Hz 20°C (µF)	D x L (mm)	120 Hz 20°C (tanδ %)*	120 Hz 85°C (A)	20°C 5 minutes (mA)	120 Hz 20°C (Ω)	( ) Represents Part Number Options
400	450	330	35 x 30	15	1.85	2.6	0.603	ELH337M400AT2(1)
400	450	390	35 x 35	15	2.10	3.0	0.510	ELH397M400AT3(1)
400	450	680	35 x 35	15	2.50	3.0	0.293	ELH687M400AT3(1)
400	450	470	35 x 40	15	2.40	3.0	0.423	ELH477M400AT4(1)
400	450	560	35 x 45	15	2.70	3.0	0.355	ELH567M400AT5(1)
400	450	680	35 x 50	15	2.90	3.0	0.293	ELH687M400AT6(1)
420	470	120	22 x 30	20	0.95	1.0	2.212	ELH127M420AQ2(1)
420	470	150	22 x 35	20	1.05	1.3	1.769	ELH157M420AQ3(1)
420	470	180	22 x 40	20	1.35	1.6	1.474	ELH187M420AQ4(1)
420	470	220	22 x 45	20	1.40	1.9	1.206	ELH227M420AQ5(1)
420	470	220	22 x 50	20	1.55	1.9	1.206	ELH227M420AQ6(1)
420	470	150	25 x 30	20	1.05	1.3	1.769	ELH157M420AR2(1)
420	470	220	25 x 40	20	1.50	1.9	1.206	ELH227M420AR4(1)
420	470	270	25 x 40	20	1.50	2.3	0.983	ELH277M420AR4(1)
420	470	220	25 x 45	20	1.60	1.9	1.206	ELH227M420AR5(1)
420	470	330	25 x 45	20	1.75	2.8	0.804	ELH337M420AR5(1)
420	470	330	25 x 50	20	1.85	2.8	0.804	ELH337M420AR6(1)
420	470	150	30 x 25	20	1.05	1.3	1.769	ELH157M420AS1(1)
420	470	270	30 x 40	20	1.60	2.3	0.983	ELH277M420AS4(1)
420	470	330	30 x 40	20	1.75	2.8	0.804	ELH337M420AS4(1)
420	470	330	30 x 45	20	1.90	2.8	0.804	ELH337M420AS5(1)
420	470	390	30 x 45	20	1.90	3.0	0.680	ELH397M420AS5(1)
420	470	470	30 x 45	20	2.10	3.0	0.565	ELH477M420AS5(1)
420	470	470	30 x 50	20	2.20	3.0	0.565	ELH477M420AS6(1)
420	470	560	30 x 50	20	2.30	3.0	0.474	ELH567M420AS6(1)
420	470	560	35 x 45	20	2.30	3.0	0.474	ELH567M420AT5(1)
450	500	47	22 x 25	20	0.50	0.4	5.647	ELH476M450AQ1(1)
450	500	56	22 x 25	20	0.65	0.5	4.739	ELH566M450AQ1(1)
450	500	68	22 x 25	20	0.67	0.6	3.903	ELH686M450AQ1(1)
450	500	68	22 x 30	20	0.70	0.6	3.903	ELH686M450AQ2(1)
450	500	82	22 x 30	20	0.80	0.7	3.236	ELH826M450AQ2(1)
450	500	100	22 x 30	20	0.85	0.9	2.654	ELH107M450AQ2(1)
450	500	120	22 x 30	20	0.95	1.1	2.212	ELH127M450AQ2(1)
450	500	100	22 x 35	20	0.95	0.9	2.654	ELH107M450AQ3(1)
450	500	150	22 x 35	20	1.05	1.3	1.769	ELH157M450AQ3(1)
450	500	120	22 x 40	20	1.05	1.1	2.212	ELH127M450AQ4(1)
450	500	150	22 x 45	20	1.20	1.3	1.769	ELH157M450AQ5(1)
450	500	220	22 x 45	20	1.40	2.0	1.206	ELH227M450AQ5(1)
450	500	68	25 x 25	20	0.70	0.6	3.903	ELH686M450AR1(1)
450	500	82	25 x 25	20	0.80	0.7	3.236	ELH826M450AR1(1)
450	500	100	25 x 30	20	0.95	0.9	2.654	ELH107M450AR2(1)
450	500	120	25 x 30	20	1.05	1.1	2.212	ELH127M450AR2(1)
450	500	150	25 x 35	20	1.20	1.3	1.769	ELH157M450AR3(1)
450	500	180	25 x 40	20	1.35	1.6	1.474	ELH187M450AR4(1)
450	500	220	25 x 50	20	1.55	2.0	1.206	ELH227M450AR6(1)
450	500	270	25 x 50	20	1.55	2.4	0.983	ELH277M450AR6(1)
450	500	100	30 x 25	20	0.95	0.9	2.654	ELH107M450AS1(1)
450	500	120	30 x 25	20	1.05	1.1	2.212	ELH127M450AS1(1)
450	500	150	30 x 30	20	1.20	1.3	1.769	ELH157M450AS2(1)
450	500	180	30 x 35	20	1.35	1.6	1.474	ELH187M450AS3(1)
450	500	220	30 x 40	20	1.55	2.0	1.206	ELH227M450AS4(1)
450	500	330	30 x 40	20	1.75	3.0	0.804	ELH337M450AS4(1)
450	500	270	30 x 45	20	1.75	2.4	0.983	ELH277M450AS5(1)
450	500	390	30 x 45	20	2.00	3.0	0.680	ELH397M450AS5(1)
450	500	330	30 x 50	20	2.00	3.0	0.804	ELH337M450AS6(1)
450	500	470	30 x 50	20	2.30	3.0	0.565	ELH477M450AS6(1)
450	500	180	35 x 25	20	1.35	1.6	1.474	ELH187M450AT1(1)
Rated Voltage	Surge Voltage	Rated Capacitance	Case Size	DF	RC	LC	ESR	Part Number

(1) Insert packaging code. See Ordering Options Table for available options.
** When capacitance exceeds 1,000 µF, the DF value (%) is increased by 2% for every additional 1,000 µF.*

Downloaded from Arrow.com.

Table 1 – Ratings & Part Number Reference cont.

Rated Voltage	Surge Voltage	Rated Capacitance	Case Size	DF	RC	LC	ESR	Part Number
(VDC)	(VDC)	120 Hz 20°C (µF)	D x L (mm)	120 Hz 20°C (tanδ %)*	120 Hz 85°C (A)	20°C 5 minutes (mA)	120 Hz 20°C (Ω)	( ) Represents Part Number Options
450	500	220	35 x 30	20	1.55	2.0	1.206	ELH227M450AT2(1)
450	500	270	35 x 35	20	1.70	2.4	0.983	ELH277M450AT3(1)
450	500	330	35 x 40	20	2.00	3.0	0.804	ELH337M450AT4(1)
450	500	390	35 x 45	20	2.25	3.0	0.680	ELH397M450AT5(1)
450	500	470	35 x 50	20	2.50	3.0	0.565	ELH477M450AT6(1)
450	500	560	35 x 50	20	2.70	3.0	0.474	ELH567M450AT6(1)
450	500	680	35 x 60	20	2.90	3.0	0.390	ELH687M450AT8(1)
500	550	100	22 x 40	20	1.00	1.0	2.654	ELH107M500AQ4(1)
500	550	150	22 x 50	20	1.40	1.5	1.769	ELH157M500AQ6(1)
500	550	47	25 x 20	20	0.50	0.5	5.647	ELH476M500AR7(1)
500	550	100	30 x 25	20	0.90	1.0	2.654	ELH107M500AS1(1)
500	550	120	30 x 30	20	1.00	1.2	2.212	ELH127M500AS2(1)
500	550	150	30 x 35	20	1.20	1.5	1.769	ELH157M500AT3(1)
500	550	180	30 x 40	20	1.40	1.8	1.474	ELH187M500AS4(1)
500	550	220	30 x 45	20	1.60	2.2	1.206	ELH227M500AS5(1)
500	550	270	30 x 50	20	1.80	2.7	0.983	ELH277M500AS6(1)
500	550	120	35 x 25	20	1.00	1.2	2.212	ELH127M500AT1(1)
500	550	180	35 x 30	20	1.30	1.8	1.474	ELH187M500AT2(1)
500	550	220	35 x 35	20	1.50	2.2	1.206	ELH227M500AT3(1)
500	550	270	35 x 40	20	1.70	2.7	0.983	ELH277M500AT4(1)
500	550	330	35 x 45	20	2.00	3.0	0.804	ELH337M500AT5(1)
500	550	390	35 x 50	20	2.30	3.0	0.680	ELH397M500AT6(1)
Rated Voltage	Surge Voltage	Rated Capacitance	Case Size	DF	RC	LC	ESR	Part Number

(1) Insert packaging code. See Ordering Options Table for available options.
** When capacitance exceeds 1,000 µF, the DF value (%) is increased by 2% for every additional 1,000 µF.*

Downloaded from Arrow.com.

Mounting Positions (Safety Vent)

In operation, electrolytic capacitors will always conduct a leakage current, which causes electrolysis. The oxygen produced by electrolysis will regenerate the dielectric layer but, at the same time, the hydrogen released may cause the internal pressure of the capacitor to increase. The overpressure vent, or safety vent, ensures that the gas can escape when the pressure reaches a certain value. All mounting positions must allow the safety vent to work properly.

Installing

- As a general principle, lower-use temperatures result in a longer, useful life of the capacitor. For this reason, it should be ensured that electrolytic capacitors are placed away from heat-emitting components. Adequate space should be allowed between components for cooling air to circulate, particularly when high ripple current loads are applied. In any case, the maximum category temperature must not be exceeded.
- Do not deform the case of the capacitors or use capacitors with a deformed case.
- Verify that the connections of the capacitors are able to insert on the board without excessive mechanical force.
- If the capacitors require mounting through additional means, the recommended mounting accessories shall be used.
- Verify the correct polarization of the capacitor on the board.
- Verify that the space around the pressure relief device is according to the following guideline:

Case Diameter	Space Around Safety Vent
≤ 16 mm	> 2 mm
> 16 to ≤ 40 mm	> 3 mm
> 40 mm	> 5 mm

It is recommended that capacitors always be mounted with the safety device uppermost or in the upper part of the capacitor.

- If the capacitors are stored for a long time, the leakage current must be verified. If the leakage current is superior to the value listed in this catalog, the capacitors must be reformed. In this case, they can be reformed by application of the rated voltage through a series resistor approximately 1 kΩ for capacitors with V_R ≤ 160 V (5 W resistor) and 10 kΩ for the other rated voltages.
- In the case of capacitors connected in a series, a suitable voltage sharing must be used.
  In the case of balancing resistors, the approximate resistance value can be calculated as: R = 60/C.

KEMET recommends, nevertheless, to ensure that the voltage across each capacitor does not exceed its rated voltage.

Downloaded from Arrow.com.

Application & Operation Guidelines

Electrical Ratings:
Capacitance (ESC)

Simplified equivalent circuit diagram of an electrolytic capacitor

The capacitive component of the equivalent series circuit, (equivalent series capacitance - ESC), is determined by applying an alternate voltage of ≤ 0.5 V at a frequency of 120 or 100 Hz and 20°C (IEC 384-1, 384-4).

Temperature Dependence of the Capacitance
Capacitance of an electrolytic capacitor depends upon temperature: with decreasing temperature the viscosity of the electrolyte increases, thereby reducing its conductivity.
Capacitance will decrease if temperature decreases. Furthermore, temperature drifts cause armature dilatation and, therefore, capacitance changes (up to 20% depending on the series considered, from 0 to 80°C). This phenomenon is more evident for electrolytic capacitors than for other types.

Frequency Dependence of the Capacitance
Effective capacitance value is derived from the impedance curve, as long as impedance is still in the range where the capacitance component is dominant.

$$C = \frac{1}{2\pi f Z}$$

C = capacitance (F)
f = frequency (Hz)
Z = impedance (Ω)

Dissipation Factor tan δ (DF)
Dissipation Factor tan δ is the ratio between the active and reactive power for a sinusoidal waveform voltage. It can be thought of as a measurement of the gap between an actual and ideal capacitor.

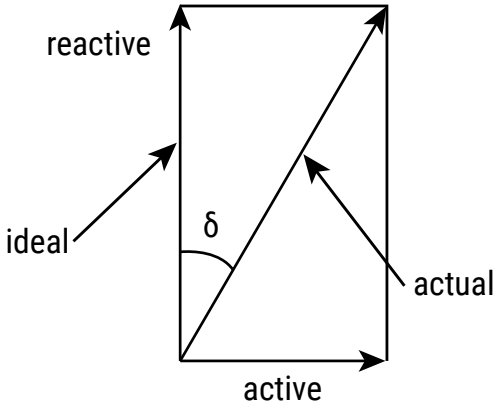

Tan δ is measured with the same set-up used for the series capacitance ESC.
Tan δ = ω x ESC x ESR where:
ESC = Equivalent series capacitance
ESR = Equivalent series resistance

Downloaded from Arrow.com.

Application & Operation Guidelines cont.

Equivalent Series Inductance (ESL)
Equivalent series inductance or self inductance results from the terminal configuration and internal design of the capacitor.

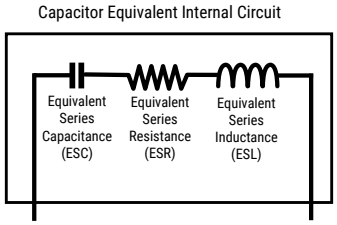

Equivalent Series Resistance (ESR)
Equivalent series resistance is the resistive component of the equivalent series circuit. ESR value depends on frequency and temperature, and is related to the tan δ by the following equation:

$$ESR = \frac{\tan \delta}{2\pi f\ ESC}$$

ESR = Equivalent series resistance (Ω)
tan δ = Dissipation factor
ESC = Equivalent series capacitance (F)
f = Frequency (Hz)

Tolerance limits of the rated capacitance must be taken into account when calculating this value.

Impedance (Z)
Impedance of an electrolytic capacitor results from a circuit formed by the following individual equivalent series components:

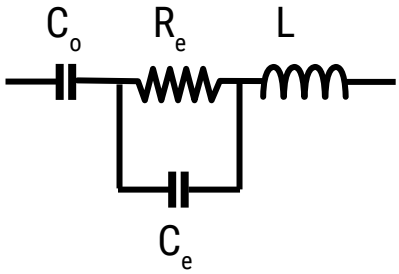

C_o = Aluminum oxide capacitance (surface and thickness of the dielectric.)
R_e = Resistance of electrolyte and paper mixture (other resistances not depending on the frequency are not considered: tabs, plates, etc.)
C_e = Electrolyte soaked paper capacitance.
L = Inductive reactance of the capacitor winding and terminals.
Impedance of an electrolytic capacitor is not a constant quantity that retains its value under all conditions; it changes depending on frequency and temperature.
Impedance as a function of frequency (sinusoidal waveform) for a certain temperature can be represented as follows:

Downloaded from Arrow.com.

Application & Operation Guidelines cont.

Impedance (Z) cont.

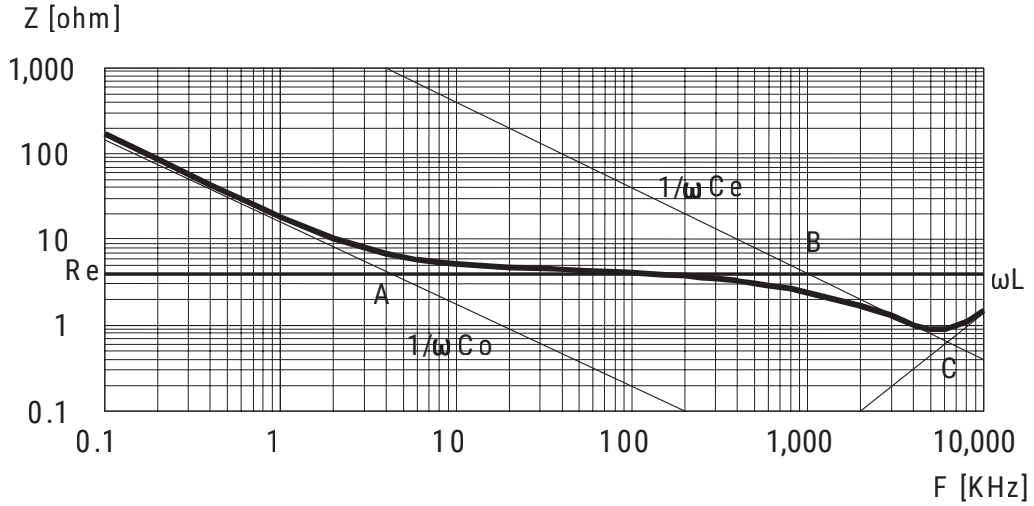

- Capacitive reactance predominates at low frequencies.
- With increasing frequency, capacitive reactance $Xc = 1/\omega C_o$ decreases until it reaches the order of magnitude of electrolyte resistance R_e(A)
- At even higher frequencies, resistance of the electrolyte predominates: $Z = R_e$ (A - B)
- When the capacitor's resonance frequency is reached (ω_0), capacitive and inductive reactance mutually cancel each other $1/\omega C_e = \omega L$, $\omega_0 = 1/SQR(LC_e)$
- Above this frequency, inductive reactance of the winding and its terminals (XL = Z = ωL) becomes effective and leads to an increase in impedance

Generally speaking, it can be estimated that $C_e \approx 0.01\ C_o$.

Impedance as a function of frequency (sinusoidal waveform) for different temperature values can be represented as follows (typical values):

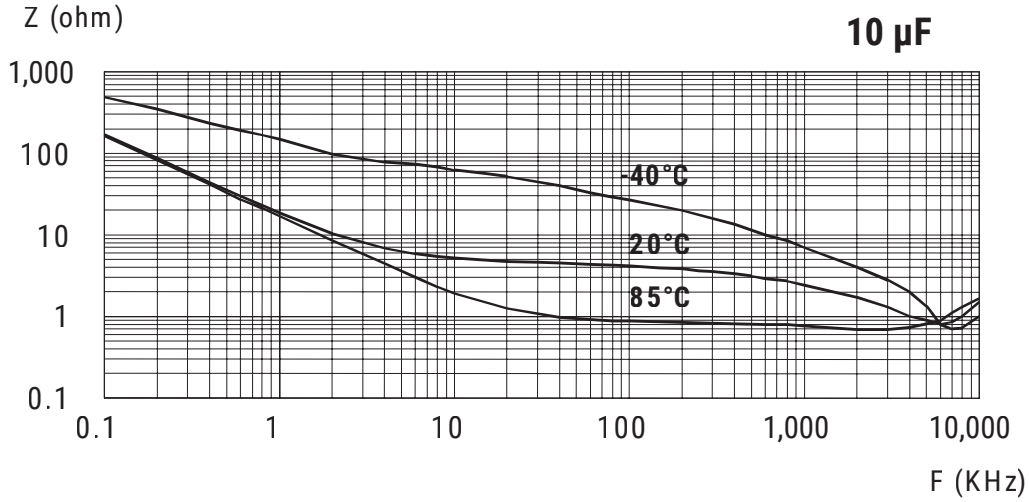

R_e is the most temperature-dependent component of an electrolytic capacitor equivalent circuit. Electrolyte resistivity will decrease if temperature rises.

In order to obtain a low impedance value throughout the temperature range, R_e must be as little as possible. However, R_e values that are too low indicate a very aggressive electrolyte, resulting in a shorter life of the electrolytic capacitor at high temperatures. A compromise must be reached.

Downloaded from Arrow.com.

Application & Operation Guidelines cont.

Leakage Current (LC)
Due to the aluminum oxide layer that serves as a dielectric, a small current will continue to flow even after a DC voltage has been applied for long periods. This current is called leakage current.

A high leakage current flows after applying voltage to the capacitor then decreases in a few minutes, for example, after prolonged storage without any applied voltage. In the course of continuous operation, the leakage current will decrease and reach an almost constant value.

After a voltage-free storage the oxide layer may deteriorate, especially at a high temperature. Since there are no leakage currents to transport oxygen ions to the anode, the oxide layer is not regenerated. The result is that a higher than normal leakage current will flow when voltage is applied after prolonged storage.

As the oxide layer is regenerated in use, the leakage current will gradually decrease to its normal level.
The relationship between the leakage current and voltage applied at constant temperature can be shown schematically as follows:

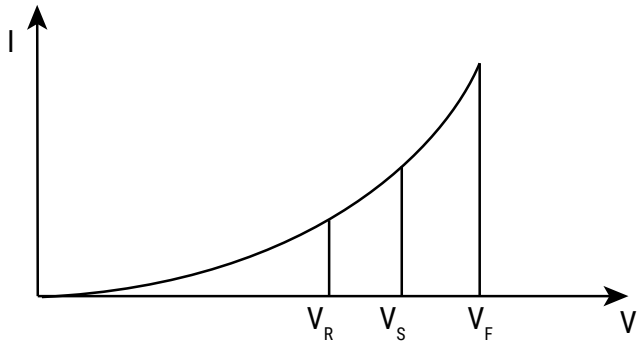

Where:
V_F = Forming voltage
If this level is exceeded, a large quantity of heat and gas will be generated and the capacitor could be damaged.
V_R = Rated voltage
This level represents the top of the linear part of the curve.
V_S = Surge voltage
This lies between V_R and V_F. The capacitor can be subjected to V_S for short periods only.

Electrolytic capacitors are subjected to a reforming process before acceptance testing. The purpose of this preconditioning is to ensure that the same initial conditions are maintained when comparing different products.

Ripple Current (RC)
The maximum ripple current value depends on:
- Ambient temperature
- Surface area of the capacitor (heat dissipation area)
tan δ or ESR
- Frequency

The capacitor's life depends on the thermal stress.

Downloaded from Arrow.com.

Application & Operation Guidelines cont.

Frequency Dependence of the Ripple Current
ESR and, thus, the tan δ depend on the frequency of the applied voltage. This indicates that the allowed ripple current is also a function of the frequency.

Temperature Dependence of the Ripple Current
The data sheet specifies maximum ripple current at the upper category temperature for each capacitor.

Expected Life Calculation
Expected life depends on operating temperature according to the following formula: $L = Lo \times 2^{(To-T)/10}$
Where:

L: Expected life
Lo: Load life at a maximum permissible operating temperature
T: Actual operating temperature
To: Maximum permissible operating temperature

This formula is applicable between 40°C and To.

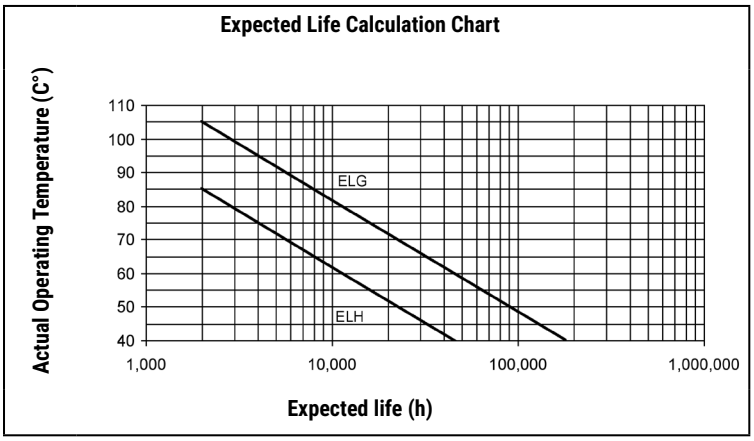

Downloaded from Arrow.com.

Packaging Quantities

Size Code	Diameter (mm)	Length (mm)	Bulk Standard Leads
Q7	22	20	400
Q1	22	25	400
Q2	22	30	400
Q3	22	35	400
Q4	22	40	400
Q5	22	45	400
Q6	22	50	400
R7	25	20	200
R1	25	25	200
R2	25	30	200
R3	25	35	200
R4	25	40	200
R5	25	45	200
R6	25	50	200
S1	30	25	200
S2	30	30	200
S3	30	35	200
S4	30	40	200
S5	30	45	200
S6	30	50	200
T1	35	25	200
T2	35	30	200
T3	35	35	200
T4	35	40	200
T5	35	45	200
T6	35	50	200
T8	35	60	200

Downloaded from Arrow.com.

Marking

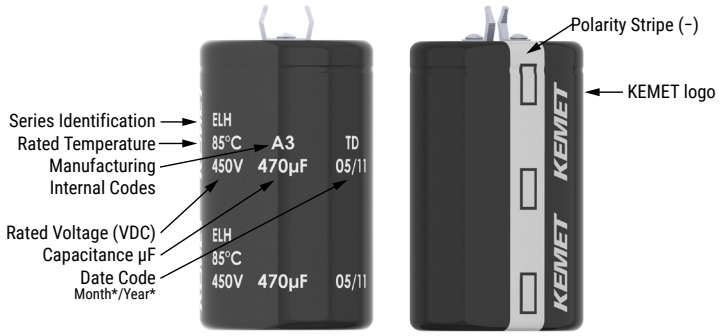

*Y = Year

Code	19	20	21	22	23	24	25	26	27
Year	2019	2020	2021	2022	2023	2024	2025	2026	2027

*M = Month

Code	01	02	03	04	05	06	07	08	09	10	11	12
Month	1	2	3	4	5	6	7	8	9	10	11	12

** Image for reference only. A slight change in the layout can occur, not affecting the marking content. This change will not impact the product's form, fit, or function, as the products remain equivalent in physical, mechanical, quality, and reliability characteristics.

Construction

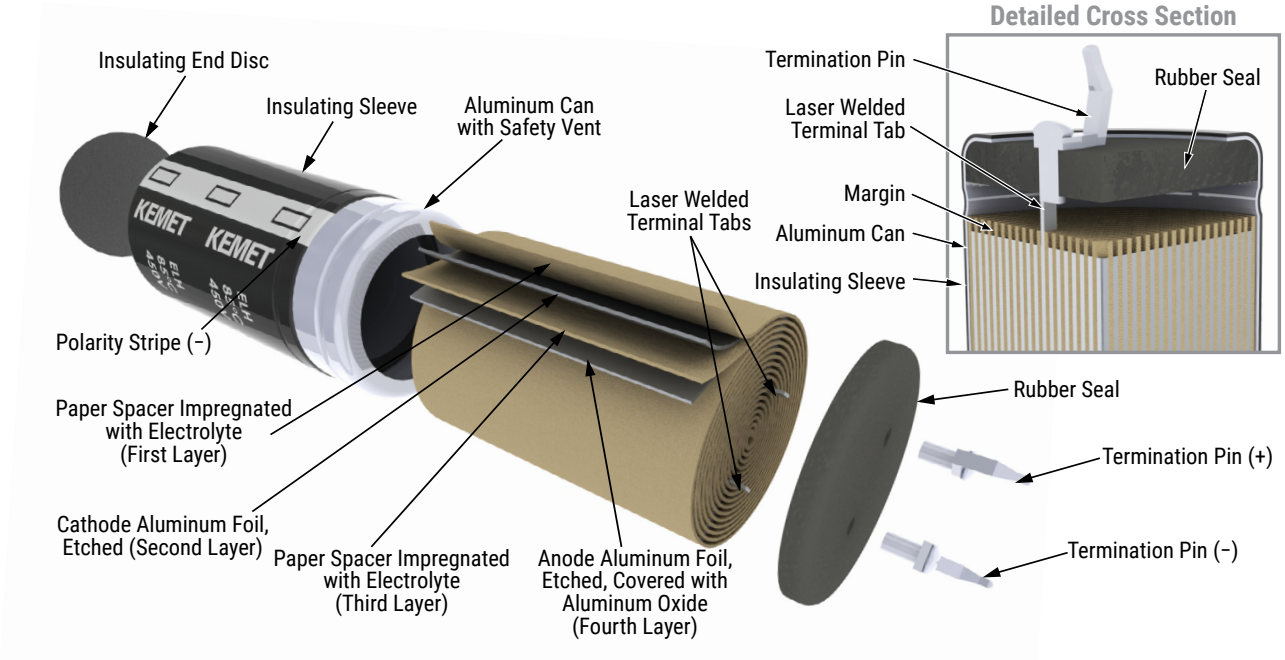

Downloaded from Arrow.com.

Construction Data

The manufacturing process begins with the anode foil being electrochemically etched to increase the surface area and then "formed" to produce the aluminum oxide layer. Both the anode and cathode foils are then interleaved with absorbent paper and wound into a cylinder. During the winding process, aluminum tabs are attached to each foil to provide the electrical contact.

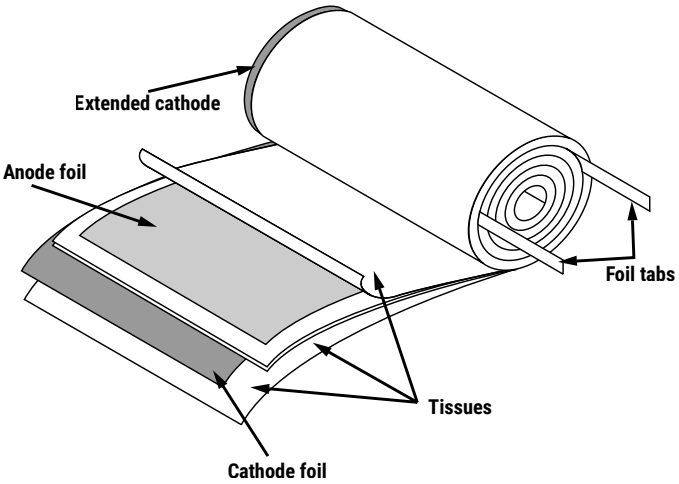

The deck, complete with terminals, is attached to the tabs and then folded down to rest on top of the winding. The complete winding is impregnated with electrolyte before being housed in a suitable container, usually an aluminum can, and sealed. Throughout the process, all materials inside the housing must be maintained at the highest purity and be compatible with the electrolyte.

Each capacitor is aged and tested before being sleeved and packed. The purpose of aging is to repair any damage in the oxide layer and thus reduce the leakage current to a very low level. Aging is normally carried out at the rated temperature of the capacitor and is accomplished by applying voltage to the device while carefully controlling the supply current. The process may take several hours to complete.

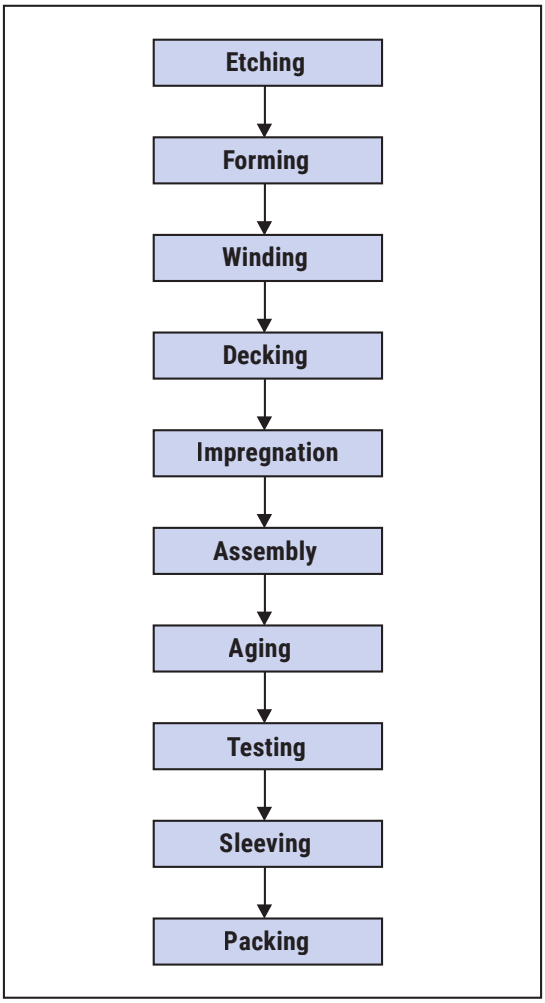

Damage to the oxide layer can occur due to variety of reasons:

- Slitting of the anode foil after forming
- Attaching the tabs to the anode foil
- Minor mechanical damage caused during winding

A sample from each batch is taken by the quality department after completion of the production process. This sample size is controlled by the use of recognized sampling tables defined in BS 6001.

The following tests are applied and may be varied at the request of the customer. In this case the batch, or special procedure, will determine the course of action.

Electrical:

- Leakage current
- Capacitance
- ESR
- Impedance
- Tan Delta

Mechanical/Visual:

- Overall dimensions
- Torque test of mounting stud
- Print detail
- Box labels
- Packaging, including packed quantity

Downloaded from Arrow.com.

KEMET Electronics Corporation Sales Offices

For a complete list of our global sales offices, please visit https://www.yageogroup.com/SalesResources/SalesOffices

Disclaimer

YAGEO Corporation and its affiliates do not recommend the use of commercial or automotive grade products for high reliability applications or manned space flight.

All product specifications, statements, information and data (collectively, the "Information") in this datasheet are subject to change. The customer is responsible for checking and verifying the extent to which the Information contained in this publication is applicable to an order at the time the order is placed. All Information given herein is believed to be accurate and reliable, but it is presented without guarantee, warranty, or responsibility of any kind, expressed or implied.

Statements of suitability for certain applications are based on KEMET Electronics Corporation's ("KEMET") knowledge of typical operating conditions for such applications, but are not intended to constitute – and KEMET specifically disclaims – any warranty concerning suitability for a specific customer application or use. The Information is intended for use only by customers who have the requisite experience and capability to determine the correct products for their application. Any technical advice inferred from this Information or otherwise provided by KEMET with reference to the use of KEMET's products is given gratis, and KEMET assumes no obligation or liability for the advice given or results obtained.

Although KEMET designs and manufactures its products to the most stringent quality and safety standards, given the current state of the art, isolated component failures may still occur. Accordingly, customer applications which require a high degree of reliability or safety should employ suitable designs or other safeguards (such as installation of protective circuitry or redundancies) in order to ensure that the failure of an electrical component does not result in a risk of personal injury or property damage.

Although all product–related warnings, cautions and notes must be observed, the customer should not assume that all safety measures are indicated or that other measures may not be required.

KEMET requires its products to be packaged and shipped on pallets. This is because KEMET's products are specifically designed to be packed onto pallets during shipment. If for any reason, the products are removed from pallets by the shipping party and shipped to the end customer, then additional external protection is required. In this instance, an external box with two carton layers and an upwards orientation sticker must be used by the shipping party, with the empty space filled with filling material, and afterwards sealing the box. If this packing and packaging guideline is not followed by the shipping party, the shipping party, and not KEMET, will be held responsible for any packaging, packing and/or product damages upon delivery of the products to the end customer. KEMET hereby disclaims any liability for damages to the products or otherwise that have been, or threaten to be, inflicted, result from or are in any way related to the packaging, packing or damage by the shipping party in contravention of the packing and packaging guidelines herein.

KEMET is a registered trademark of KEMET Electronics Corporation.

Downloaded from Arrow.com.