CAD GENERATED DRAWING - NO PENCIL CHANGES ALLOWED

PART NUMBER	CURRENT RATING (A)	BODY COLOR	RATED VOLTAGE
0283020.MXJ-B	20	LT. BLUE	32V
0283030.MXJ-B	30	PINK	
0283040.MXJ-B	40	GREEN	
0283050.MXJ-B	50	RED	
0283060.MXJ-B	60	YELLOW	
0283070.MXJ-B	70	BROWN	
0283080.MXJ-B	80	BLACK	
0283100.MXJ-B	100	BLUE	
0283120.MXJ-B	120	WHITE	
0283140.MXJ-B	140	REDDISH BROWN	

% OF RATED CURRENT	OPENING TIME	
	MIN	MAX
110%	14,400 SEC.	-
200%	5 SEC.	100 SEC.
350%	0.2 SEC.	7 SEC.
600%	0.04 SEC.	1 SEC.

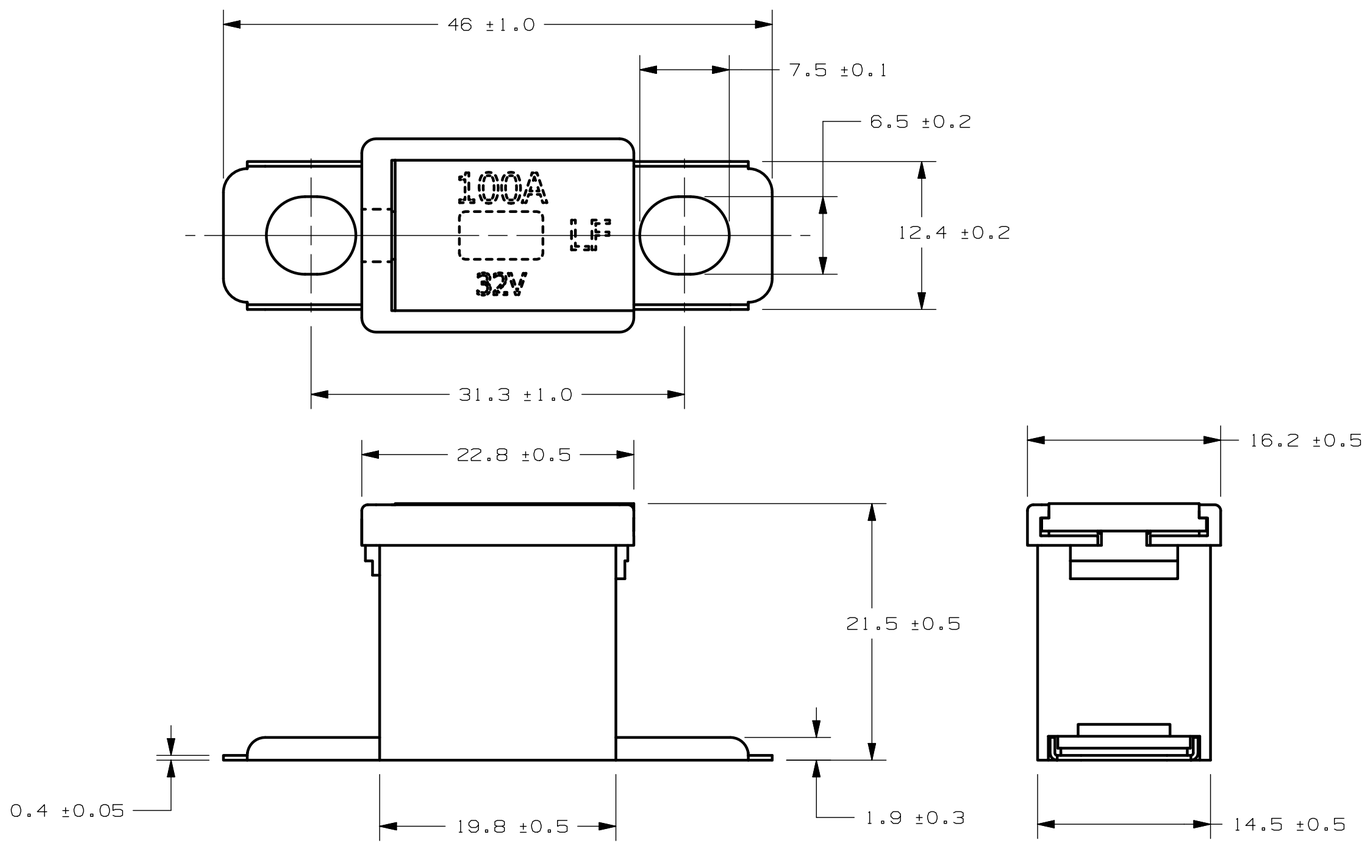

METRIC

UNLESS OTHERWISE SPECIFIED, DIMENSIONS ARE IN MILLIMETERS.
DIMENSIONS IN BRACKETS [ ] ARE INCHES

UNLESS OTHERWISE SPECIFIED, DIMENSIONS DO NOT INCLUDE PLATING.

◎ DENOTES CRITICAL CHARACTERISTICS.

CPK DENOTES CPK DIMENSIONS, -MINIMUM CPK VALUE

ST DENOTES A CHARACTERISTIC THAT PROVIDES AN INDICATION OF PROCESS PERFORMANCE. PROCEDURE FOR MEASUREMENT AND TRACKING TO BE DEFINED IN LITTELFUSE INSPECTION INSTRUCTIONS

CP DENOTES CP DIMENSIONS, -MINIMUM CP VALUE MUST BE WITHIN THE DIMENSIONAL LIMITATIONS SHOWN ON DRAWING AND INITIALLY LOCATED TO ALLOW FOR MAXIMUM TOOL LIFE

NO	COMPONENT NO	DESCRIPTION	QTY/M	U/M

BILL OF MATERIAL

MATL SPEC

FINISH

COPIES TO: 1 9 18 / 2 10 19 / 3 12 20 / 4 13 21 / 5 14 23 / 6 15 33 / 7 16 43 / 8 17 53

DRW GMB DATE 08/14/09 SCALE 2:1
CHK DATE SUPER DR
APPD DATE FINSH GOOD WT GRAMS/PIECE

TOLERANCE UNLESS OTHERWISE SPECIFIED
ONE PLACE DEC +/-.4 THREE PLACE DEC +/-.100
TWO PLACE DEC +/-.25 ANGULAR +/-1°

3RD ANGLE PROJECTION

TITLE FUSE - PAL 283 ATIS 31mm 32V SLOW BLOW

Littelfuse® DES PLAINES, ILLINOIS 60016

REVISION A DRWG. NO. OL-0283000.MXJ-B OUTLINE

LTR	DATE	REVISION	CHK	APD
A	08/14/09	000762ER-RELEASE GMB		

Downloaded from Arrow.com.