Rev	AWO #	Description	Date	Appr
-	9427	RELEASED	3/06/09	
A	-	REDRAWN	7/11/11	

APPROVED: _____

DATE: _____ TITLE: _____

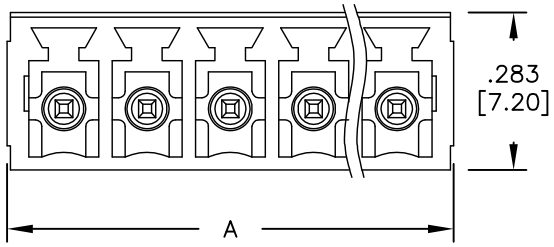

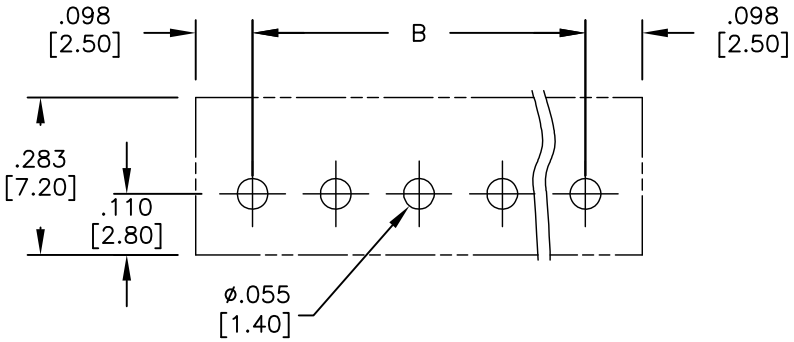

Recommended PCB Layout

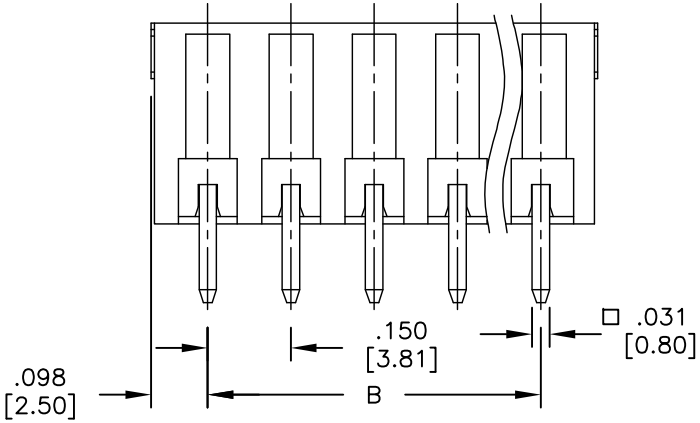

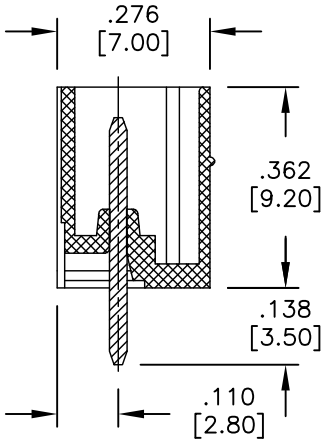

Poles	Tolerance
2–6P	±.006 [0.15]
7–12P	±.008 [0.20]
13–18P	±.010 [0.25]
19–24p	±.012 [0.30]

Poles: 2 thru 24
A = .150 [3.81] X No. of Spaces + .197 [5.00]
B = .150 [3.81] X No. of Spaces

SPECIFICATIONS:
Material:
Insulator: Thermoplastic, rated UL 94V–0
Insulator color: Green
Contact: Copper Alloy, Tin plated.
Electrical:
Operation voltage: 300 VAC
Current rating: 10 Amps
Mechanical:
Withstanding Voltage: 1.6KV
Environmental:
Operating temperature: –40°C to +115°C
Lead free, RoHS compliant.

RoHS COMPLIANT

UNLESS OTHERWISE SPECIFIED
ALL DIMENSIONS ARE MM
TOLERANCES: EXCEPT AS NOTED

INCHES		HOLES	
.X	± .10	Ø.X	±.10
.XX	± .020	Ø.XX	±.015
.XXX	± .015	Ø.XXX	±.010

APPROVALS		DATE
DRAWN	DY	3/06/09
CHECKED		
APPROVED		

ADAM TECH
909 Rahway Avenue, Union, NJ 07083
Phone: 908-687-5000 Fax: 908-687-5710

TITLE
.150 [3.81] PITCH,TERMINAL BLOCK, VERTICAL

SIZE	PART NO.	REV.
X	EB3-XX-B-180	A

REF: S00007T | SCALE: NTS | SHEET 1 OF 1

Downloaded from Arrow.com.