THIS DRAWING IS UNPUBLISHED. RELEASED FOR PUBLICATION -,- .
© COPYRIGHT - By - ALL RIGHTS RESERVED.

REVISIONS					
P	LTR	DESCRIPTION	DATE	DWN	APVD
	C1	REVISED PER ECR-18-008168	06JUL18	MD	TD

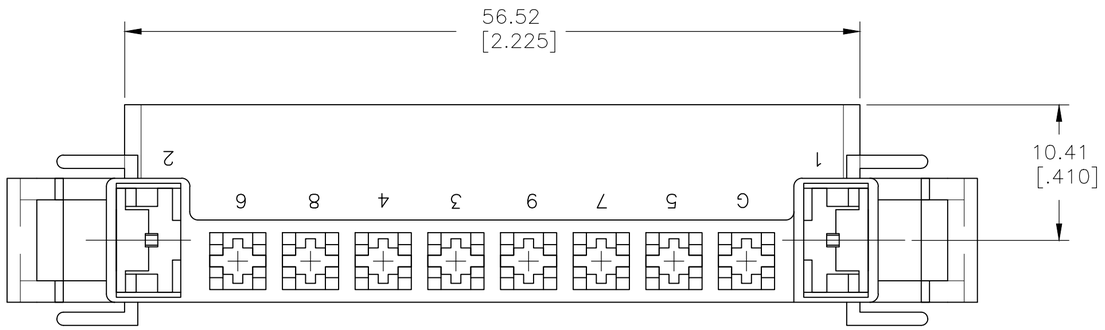

1 POSITIONS 3 THRU 8 AND G ACCEPT .125 BLADE RECEPTACLE P/N 1217039-1

2 POSITIONS 1 AND 2 ACCEPT .250 FASTON LIF RECEPTACLES P/N 603306-( ) OR 63537-( ) OR 63365- ( ). ALSO ACCEPTS FASTON RECEPTACLE 280001-9

△3 GLOW WIRE COMPLIANT PER IEC 60335-1, 750°C NO FLAME.

△4 PRELIMINARY - NOT FOR PRODUCTION

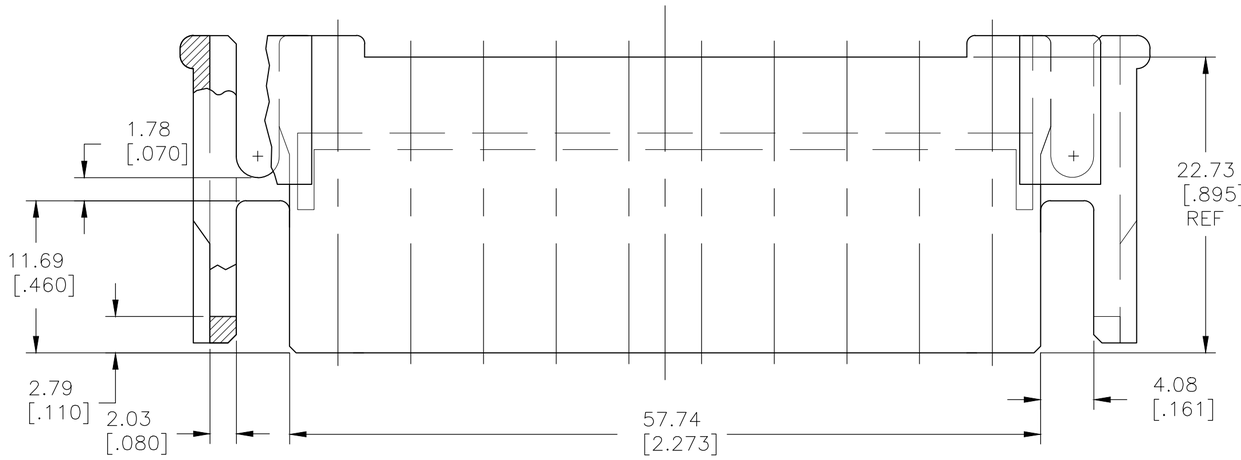

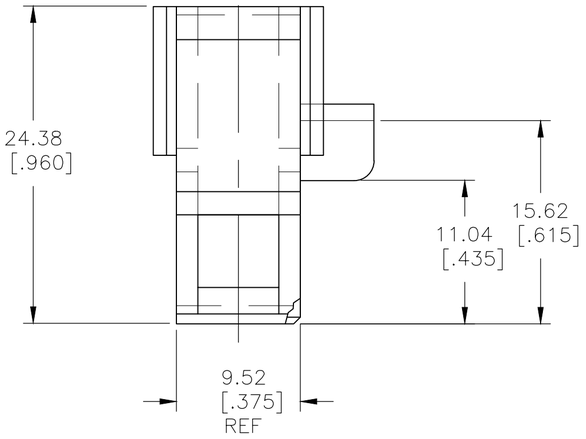

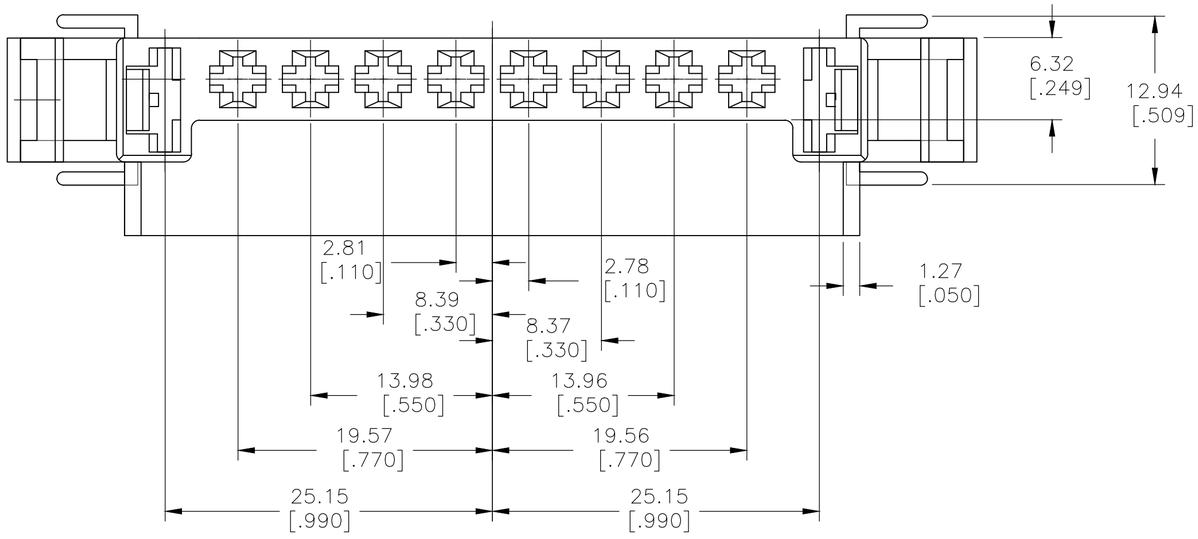

	MAX WIRE SIZE	COLOR	MATERIAL	PART NO.
OBSOLETE	2.5 mm2 (#13.5 awg)	~~BLACK~~	~~△3 NYLON 6~~	~~△4 521986-3~~
OBSOLETE	2.5 mm2 (#13.5 awg)	~~NATURAL~~	~~△3 NYLON 6~~	~~521986-2~~
	5.0 mm2 (#10 awg)	NATURAL	NYLON 6/6	521986-1

THIS DRAWING IS A CONTROLLED DOCUMENT.

DIMENSIONS: mm [INCHES]

TOLERANCES UNLESS OTHERWISE SPECIFIED:
0 PLC ± -
1 PLC ± -
2 PLC ± 0.25[.010]
3 PLC ± -
4 PLC ± -
ANGLES ± -

MATERIAL: SEE TABLE
FINISH: SEE TABLE

DWN JR RUTH 06DEC06
CHK JOHN KNOLL 06DEC06
APVD JOHN KNOLL 06DEC06
PRODUCT SPEC 108-1271-1
APPLICATION SPEC 114-49003
WEIGHT 0,000000

TE Connectivity Ltd.

NAME: MOTOR HOUSING, DRYER, 10 POSITION GEN III -

SIZE	CAGE CODE	DRAWING NO	RESTRICTED TO
A2	00779	C-521986	-

CUSTOMER DRAWING | SCALE 3:1 | SHEET 1 OF 1 | REV C1

521986

Downloaded from Arrow.com.