FAIRCHILD™

Is Now Part of

ON

ON Semiconductor®

To learn more about ON Semiconductor, please visit our website at
www.onsemi.com

Please note: As part of the Fairchild Semiconductor integration, some of the Fairchild orderable part numbers will need to change in order to meet ON Semiconductor's system requirements. Since the ON Semiconductor product management systems do not have the ability to manage part nomenclature that utilizes an underscore (_), the underscore (_) in the Fairchild part numbers will be changed to a dash (-). This document may contain device numbers with an underscore (_). Please check the ON Semiconductor website to verify the updated device numbers. The most current and up-to-date ordering information can be found at www.onsemi.com. Please email any questions regarding the system integration to Fairchild_questions@onsemi.com.

ON Semiconductor and the ON Semiconductor logo are trademarks of Semiconductor Components Industries, LLC dba ON Semiconductor or its subsidiaries in the United States and/or other countries. ON Semiconductor owns the rights to a number of patents, trademarks, copyrights, trade secrets, and other intellectual property. A listing of ON Semiconductor's product/patent coverage may be accessed at www.onsemi.com/site/pdf/Patent-Marking.pdf. ON Semiconductor reserves the right to make changes without further notice to any products herein. ON Semiconductor makes no warranty, representation or guarantee regarding the suitability of its products for any particular purpose, nor does ON Semiconductor assume any liability arising out of the application or use of any product or circuit, and specifically disclaims any and all liability, including without limitation special, consequential or incidental damages. Buyer is responsible for its products and applications using ON Semiconductor products, including compliance with all laws, regulations and safety requirements or standards, regardless of any support or applications information provided by ON Semiconductor. "Typical" parameters which may be provided in ON Semiconductor data sheets and/or specifications can and do vary in different applications and actual performance may vary over time. All operating parameters, including "Typicals" must be validated for each customer application by customer's technical experts. ON Semiconductor does not convey any license under its patent rights nor the rights of others. ON Semiconductor products are not designed, intended, or authorized for use as a critical component in life support systems or any FDA Class 3 medical devices or medical devices with a same or similar classification in a foreign jurisdiction or any devices intended for implantation in the human body. Should Buyer purchase or use ON Semiconductor products for any such unintended or unauthorized application, Buyer shall indemnify and hold ON Semiconductor and its officers, employees, subsidiaries, affiliates, and distributors harmless against all claims, costs, damages, and expenses, and reasonable attorney fees arising out of, directly or indirectly, any claim of personal injury or death associated with such unintended or unauthorized use, even if such claim alleges that ON Semiconductor was negligent regarding the design or manufacture of the part. ON Semiconductor is an Equal Opportunity/Affirmative Action Employer. This literature is subject to all applicable copyright laws and is not for resale in any manner.

Downloaded from Arrow.com.

FAIRCHILD SEMICONDUCTOR®

July 2012

FXMA2104
Dual-Supply, 4-Bit Voltage Translator / Buffer / Repeater / Isolator for Open-Drain Applications

Features

- Bi-Directional Interface between Any Two Levels: 1.65V to 5.5V
- Direction Control not Needed
- System GPIO Resources Not Required when OE Tied to V_{CCA}
- I^2C 400pF Buffer / Repeater
- I^2C-Bus® Isolation
- A/B Port V_{OL} = 175mV (Typical), V_{IL} = 150mV, I_{OL} = 6mA
- Open-Drain Inputs / Outputs
- Accommodates Standard-Mode and Fast-Mode I^2C-Bus Devices
- Supports I^2C Clock Stretching & Multi-Master
- Fully Configurable: Inputs and Outputs Track V_{CC}
- Non-Preferential Power-Up; Either V_{CC} May Be Powered-Up First
- Outputs Switch to 3-State if Either V_{CC} is at GND
- Tolerant Output Enable: 5V
- Packaged in 12-Lead Ultrathin MLP (1.8mm x 1.8mm)
- ESD Protection Exceeds:
  - 5kV HBM ESD (per JESD22-A114)
  - 2kV CDM (per JESD22-C101)

Description

The FXMA2104 is a 4-bit high-performance, configurable dual-voltage supply, open-drain translator for bi-directional voltage translation over a wide range of input and output voltages levels.

Intended for use as a voltage translator in applications using the I^2C-Bus® interface, the input and output voltage levels are compatible with I^2C device specification voltage levels. External pull-up resistors are required.

The device is designed so that the A port tracks the V_{CCA} level and the B port tracks the V_{CCB} level. This allows for bi-directional A/B port voltage translation between any two levels from 1.65V to 5.5V. V_{CCA} can equal V_{CCB} from 1.65V to 5.5V.

Non-preferential power-up means either V_{CC} can be powered-up first. Internal power-down control circuits place the device in 3-state if either V_{CC} is removed.

The two ports of the device have automatic direction-sense capability. Either port may sense an input signal and transfer it as an output signal to the other port.

Ordering Information

Part Number	Operating Temperature Range	Top Mark	Package	Packing Method
FXMA2104UMX	-40 to +85°C	BX	12-Lead, Ultrathin, MLP, 1.8mm x 1.8mm	5000 Units on Tape and Reel

© 2011 Fairchild Semiconductor Corporation

Downloaded from Arrow.com.

Block Diagram

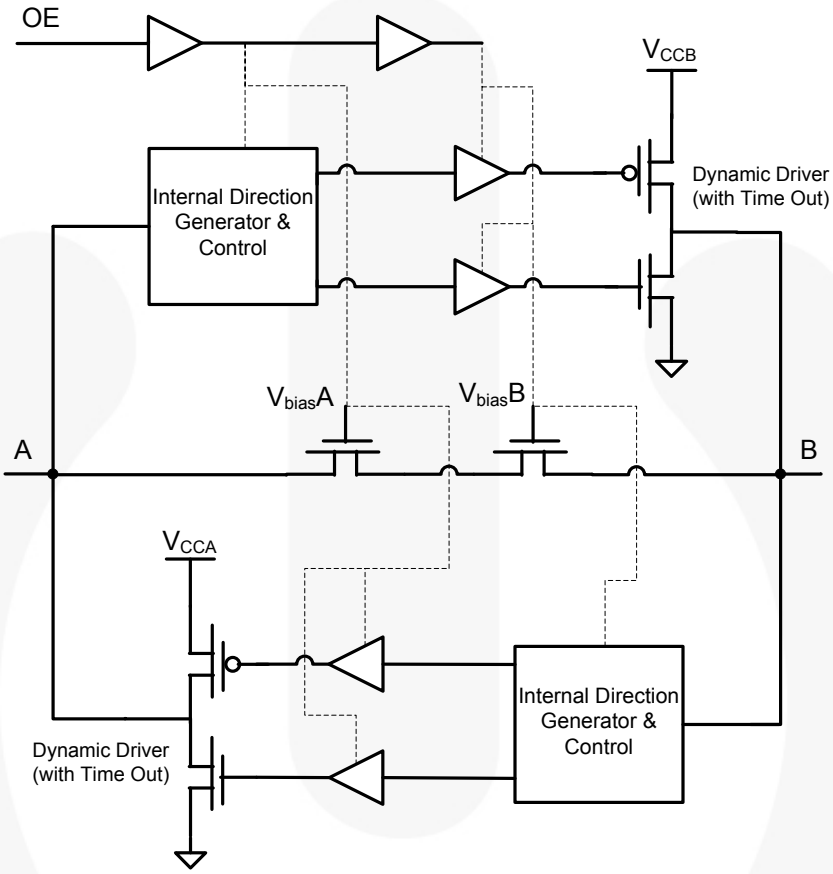

Figure 1. Block Diagram, 1 of 4 Channels

Downloaded from Arrow.com.

Pin Configuration

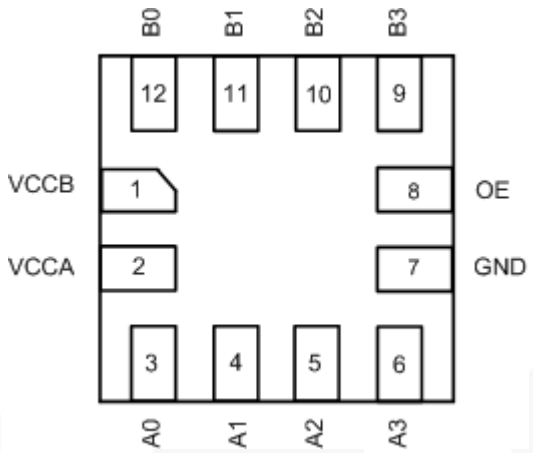

Figure 2. UMLP (Top-Through View)

Pin Definitions

Pin #	Name	Description
1	V_{CCB}	B-Side Power Supply
2	V_{CCA}	A-Side Power Supply
3, 4, 5, 6	A_0, A_1, A_2, A_3	A-Side Inputs or 3-State Outputs
7	GND	Ground
8	OE	Output Enable Input
9, 10, 11, 12	B_3, B_2, B_1, B_0,	B-Side Inputs or 3-State Outputs

Truth Table

Control	Outputs
OE	
LOW Logic Level	3-State
HIGH Logic Level	Normal Operation

Note:

1. If the OE pin is driven LOW, the FXMA2104 is disabled and the A_0, A_1, A_2, A_3, B_0, B_1, B_2 and B_3 pins (including dynamic drivers) are forced into 3-state.

Downloaded from Arrow.com.

Absolute Maximum Ratings

Stresses exceeding the Absolute Maximum Ratings may damage the device. The device may not function or be operable above the recommended operating conditions and stressing the parts to these levels is not recommended. In addition, extended exposure to stresses above the recommended operating conditions may affect device reliability. The absolute maximum ratings are stress ratings only.

Symbol	Parameter		Min.	Max.	Units
V_{CCA}, V_{CCB}	Supply Voltage		-0.5	7.0	V
V_{IN}	DC Input Voltage	A Port	-0.5	7.0	V
		B Port	-0.5	7.0	
		Control Input (OE)	-0.5	7.0	
V_O	Output Voltage(2)	A_n Outputs 3-State	-0.5	7.0	V
		B_n Outputs 3-State	-0.5	7.0	
		A_n Outputs Active	-0.5	V_{CCA} + 0.5V	
		B_n Outputs Active	-0.5	V_{CCB} + 0.5V	
I_{IK}	DC Input Diode Current	At V_{IN} < 0V		-50	mA
I_{OK}	DC Output Diode Current	At V_O < 0V		-50	mA
		At V_O > V_{CC}		+50	
I_{OH} / I_{OL}	DC Output Source/Sink Current		-50	+50	mA
I_{CC}	DC V_{CC} or Ground Current per Supply Pin			±100	mA
P_D	Power Dissipation	At 400KHz		0.129	mW
T_{STG}	Storage Temperature Range		-65	+150	°C
ESD	Electrostatic Discharge Capability	Human Body Model, JESD22-A114		5	kV
		Charged Device Mode, JESD22-C101		2	

Note:
2. I_O absolute maximum rating must be observed.

Recommended Operating Conditions

The Recommended Operating Conditions table defines the conditions for actual device operation. Recommended operating conditions are specified to ensure optimal performance to the datasheet specifications. Fairchild does not recommend exceeding them or designing to Absolute Maximum Ratings.

Symbol	Parameter		Min.	Max.	Units
V_{CCA}, V_{CCB}	Power Supply Operating		1.65	5.50	V
V_{IN}	Input Voltage	A Port	0	5.5	V
		B Port	0	5.5	
		Control Input (OE)	0	V_{CCA}	
Θ_{JA}	Thermal Resistance			301.5	C°/W
T_A	Free Air Operating Temperature		-40	+85	°C

Note:
3. All unused inputs and I/O pins must be held at V_{CCI} or GND, V_{CCI} is the V_{CC} associated with the input side.

Downloaded from Arrow.com.

Functional Description

Power-Up/Power-Down Sequencing

FXM translators offer an advantage in that either V_{CC} may be powered up first. This benefit derives from the chip design. When either V_{CC} is at 0V, outputs are in a high-impedance state. The control input (OE) is designed to track the V_{CCA} supply. A pull-down resistor tying OE to GND should be used to ensure that bus contention, excessive currents, or oscillations do not occur during power-up/power-down. The size of the pull-down resistor is based upon the current-sinking capability of the device driving the OE pin.

The recommended power-up sequence is:

1. Apply power to the first V_{CC}.
2. Apply power to the second V_{CC}.
3. Drive the OE input HIGH to enable the device.

The recommended power-down sequence is:

1. Drive OE input LOW to disable the device.
2. Remove power from either V_{CC}.
3. Remove power from other V_{CC}.

Note:

4. Alternatively, the OE pin can be hardwired to V_{CCA} to save GPIO pins. If OE is hardwired to V_{CCA}, either V_{CC} can be powered up or down first.

Application Circuit

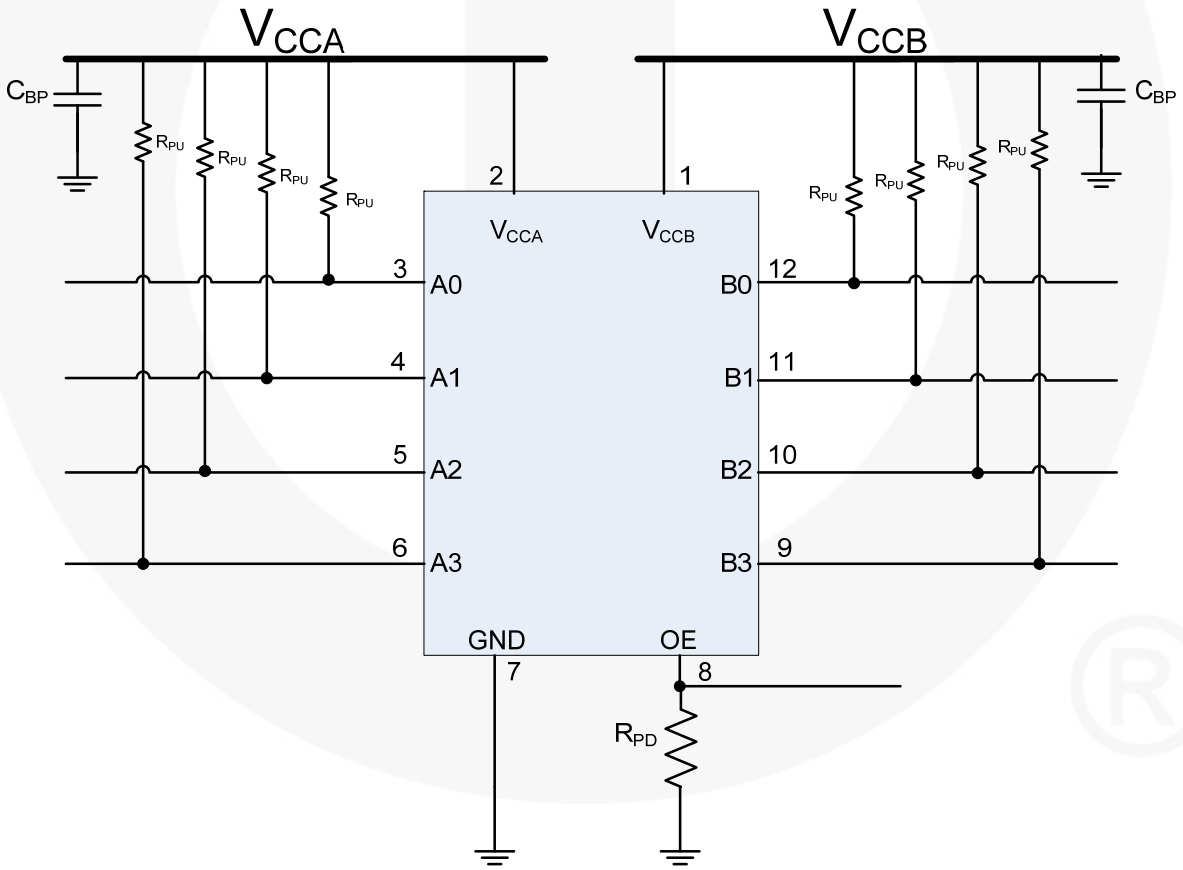

Figure 3. Application Circuit

Downloaded from Arrow.com.

Application Information

The FXMA2104 has open-drain I/Os and requires external pull-up resistors on the eight data I/O pins, as shown in Figure 3. If a pair of data I/O pins (A_n/B_n) is not used, both pins should be tied to GND (or both to V_{CC}). In this case, pull-down or pull-up resistors are not required. The recommended values for the pull-up resistors (RPUs) are 1KΩ to 10K, depending on the total bus capacitance, the user is free to vary the pull-up resistor value to meet the maximum I^2C edge rate per the I^2C specification (UM10204 rev. 03, June 19, 2007). For example, the maximum edge rate (30% - 70%) during Fast Mode (400kbit/s) is 300ns. If bus capacitance is approaching the maximum 400pF, lower the RPU value to keep the rise time below 300ns (Fast Mode). Section 7.1 of the I^2C specification provides an excellent guideline for pull-up resistor sizing.

Theory of Operation

The FXMA2104 is designed for high-performance level shifting and buffer / repeating in an I^2C application. Figure 1 shows that each bi-directional channel contains two series-Npassgates and two dynamic drivers. This hybrid architecture is highly beneficial in an I^2C application where auto-direction is a necessity.

For example, during the following three I^2C protocol events:

- Clock Stretching
- Slave's ACK Bit (9th bit = 0) following a Master's Write Bit (8th bit = 0)
- Clock Synchronization and Multi Master Arbitration

the bus direction needs to change from master-to-slave to slave-to-master without the occurrence of an edge. If there is an I^2C translator between the master and slave in these examples, the I^2C translator must change direction when both A and B ports are LOW. The Npassgates can accomplish this task very efficiently because, when both A and B ports are LOW, the Npassgates act as a low resistive short between the two (A and B) ports.

Due to I^2C's open-drain topology, I^2C masters and slaves are not push-pull drivers. Logic LOWs are "pulled down" (I_{sink}), while logic HIGHs are "let go" (3-state). For example, when the master lets go of SCL (SCL always comes from the master), the rise time of SCL is largely determined by the RC time constant, where R = R_{PU} and C = the bus capacitance. If the FXMA2104 is attached to the master [on the A port] and there is a slave on the B port, the Npassgates act as a low resistive short between the ports until either of the port's $V_{CC}/2$ thresholds are reached. After the RC time constant has reached the $V_{CC}/2$ threshold of either port, the port's edge detector triggers both dynamic drivers to drive their respective ports in the LOW-to-HIGH (LH) direction, accelerating the rising edge. The resulting rise time resembles the scope shot in Figure 4. Effectively, two distinct slew rates appear in rise time. The first slew rate (slower) is the RC time constant of the bus. The second slew rate (much faster) is the dynamic driver accelerating the edge.

If both the A and B ports of the translator are HIGH, a high-impedance path exists between the A and B ports because both the Npassgates are turned off. If a master or slave device decides to pull SCL or SDA LOW, that device's driver pulls down (I_{sink}) SCL or SDA until the edge reaches the A or B port $V_{CC}/2$ threshold. When either the A or B port threshold is reached, the port's edge detector triggers both dynamic drivers to drive their respective ports in the HIGH-to-LOW (HL) direction, accelerating the falling edge.

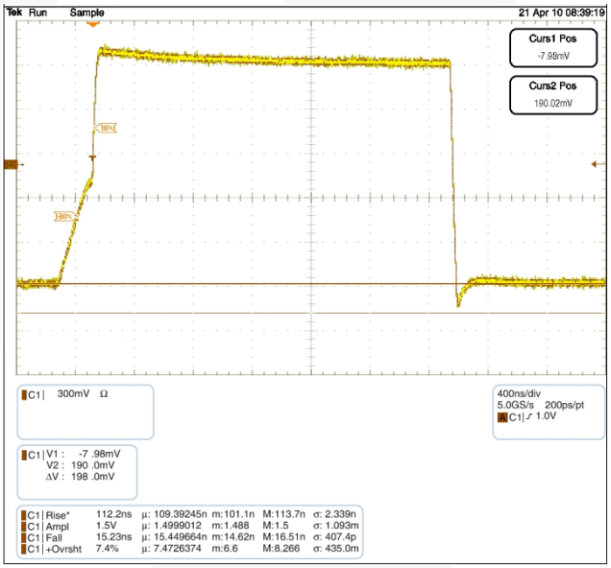

Figure 4. Waveform C: 600pF, Total R_{PU}: 2.2KΩ

Downloaded from Arrow.com.

Buffer / Repeater Performance

The FXMA2104 dynamic drivers have enough current-sourcing capability to drive a 400pF capacitive bus. This is beneficial when an I^2C buffer / repeater is required. The I^2C specification stipulates a maximum bus capacitance of 400pF. If an I^2C segment exceeds 400pF, an I^2C buffer / repeater is required to split the segment into two segments, each of which is less than 400pF. Figure 4 is a scope shot of an FXMA2104 driving a lumped load of 600pF. Notice the (30% - 70%) rise time is only 112ns (total R_{PU} = 2.2K •). This is well below the maximum edge rate of 300ns. Not only does the FXMA2104 drive 400Pf; it also provides excellent headroom below the I^2C specification maximum edge rate of 300ns.

V_{OL} vs. I_{OL}

The I^2C specification mandates a maximum V_{IL} (I_{OL} of 3mA) of V_{CC} • 0.3 and a maximum V_{OL} of 0.4V. If there is a master on the A port of an I^2C translator with a V_{CC} of 1.65V and a slave on the I^2C translator B port with a V_{CC} of 3.3V, the maximum V_{IL} of the master is (1.65V x 0.3) 495mV. The slave could legally transmit a valid logic LOW of 0.4V to the master.

If the I^2C translator's channel resistance is too high, the voltage drop across the translator could present a V_{IL} to the master greater than 495mV. To complicate matters, the I^2C specification states that 6mA of I_{OL} is recommended for bus capacitances approaching 400pF. More I_{OL} increases the voltage drop across the I^2C translator. The I^2C application benefits when I^2C translators exhibit low V_{OL} performance. Figure 5 depicts typical FXMA2104 V_{OL} performance vs. a competitor, given a 0.4V V_{IL}.

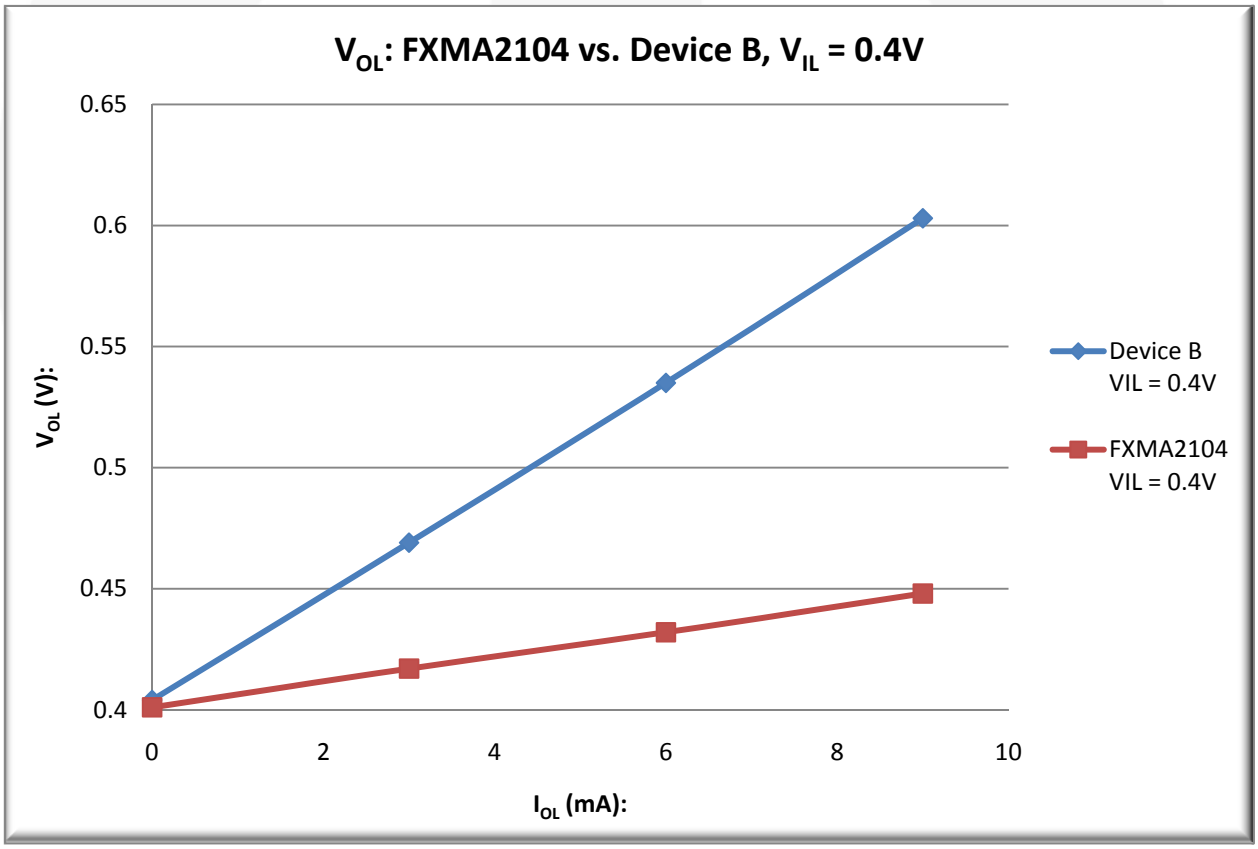

Figure 5. V_{OL} vs. I_{OL}

Downloaded from Arrow.com.

I²C Bus Isolation

The FXMA2104 supports I²C-Bus® isolation for the following conditions:

- Bus isolation if bus clear
- Bus isolation if either V_{CC} goes to ground

Bus Clear

Because the I²C specification defines the minimum SCL frequency of DC, the SCL signal can be held LOW forever; however, this condition shuts down the I²C bus. The I²C specification refers to this condition as Bus Clear. In Figure 6, if slave #2 holds down SCL forever, the master and slave #1 are not able to communicate because the FXMA2104 passes the SCL stuck-LOW condition from slave #2 to slave #1 as well as the master. However, if the OE pin is pulled LOW (disabled), both ports (A and B) are 3-stated. This results in the FXMA2104 isolating slave #2 from the master and slave #1, allowing full communication between the master and slave #1.

Either V_{CC} to GND

If slave #2 is a camera that is suddenly removed from the I²C bus, resulting in V_{CCB} transitioning from a valid V_{CC} (1.65V – 5.5V) to 0V; the FXMA2104 automatically forces all I/Os on both its A and B ports into 3-state. Once V_{CCB} has reached 0V, full I²C communication between the master and slave #1 remains undisturbed.

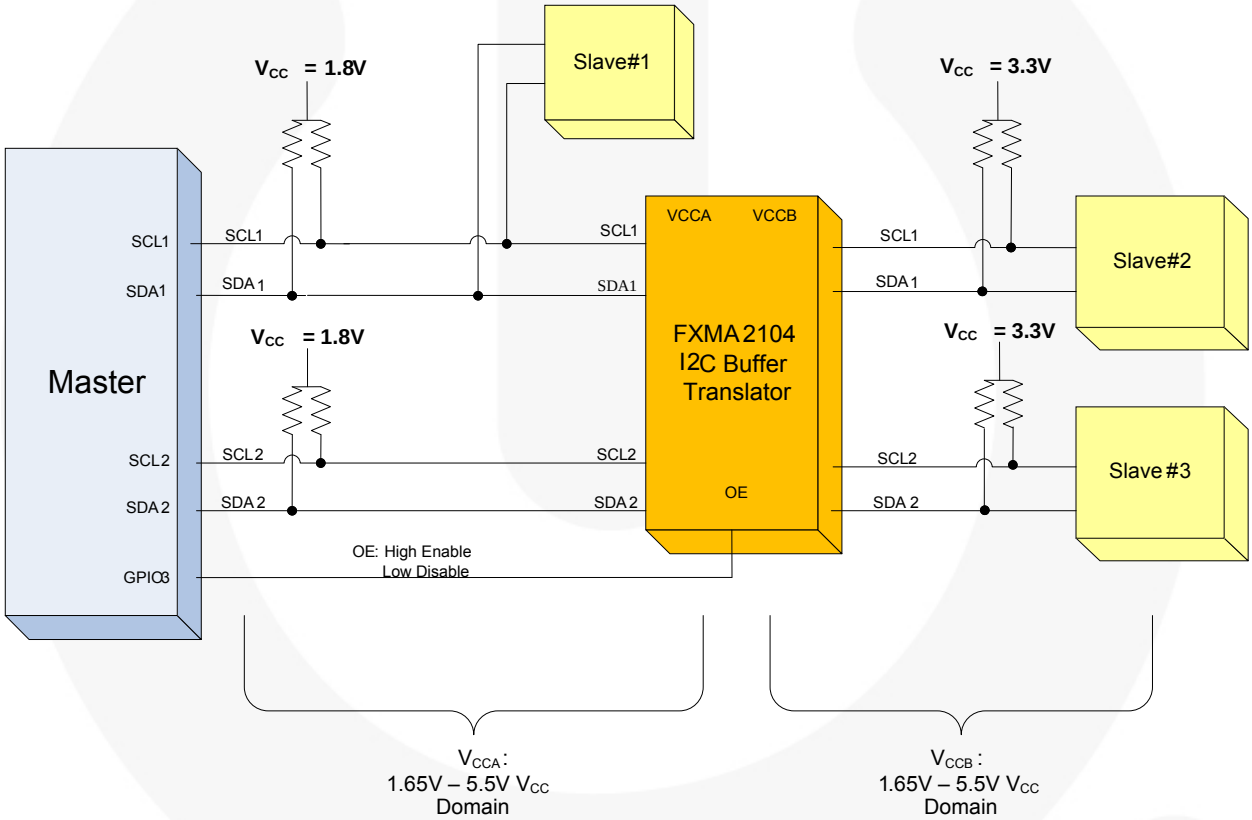

Figure 6. Bus Isolation

Downloaded from Arrow.com.

DC Electrical Characteristics

T_A = –40°C to +85°C.

Symbol	Parameter	Condition		V_{CCA} (V)	V_{CCB} (V)	Min.	Max.	Unit
V_{IHA}	High Level Input Voltage A	Data Inputs A_n		1.65–5.50	1.65–5.50	V_{CCA} – 0.4		V
		Control Input OE		1.65–5.50	1.65–5.50	0.7 x V_{CCA}		
V_{IHB}	High Level Input Voltage B	Data Inputs B_n		1.65–5.50	1.65–5.50	V_{CCB} – 0.4		V
V_{ILA}	Low Level Input Voltage A	Data Inputs A_n		1.65–5.50	1.65–5.50		0.4	V
		Control Input OE		1.65–5.50	1.65–5.50		0.3 x V_{CCA}	
V_{ILB}	Low Level Input Voltage B	Data Inputs B_n		1.65–5.50	1.65–5.50		0.4	V
V_{OL}	Low Level Output Voltage	V_{IL} = 0.15V		1.65–5.50	1.65–5.50		0.4	V
		I_{OL} = 6mA						
I_L	Input Leakage Current	Control Input OE, V_{IN} = V_{CCA} or GND		1.65–5.50	1.65–5.50		±1	µA
I_{OFF}	Power-Off Leakage Current	A_n	V_{IN} or V_O = 0V to 5.5V	0	5.50		±2	µA
		B_n	V_{IN} or V_O = 0V to 5.5V	5.50	0		±2	
I_{OZ}	3-State Output Leakage(6)	A_n, B_n	V_O = 0V to 5.5V, OE = V_{IL}	5.50	5.50		±2	µA
		A_n	V_O = 0V to 5.5V, OE = Don't Care	5.50	0		±2	
		B_n	V_O = 0V to 5.5V, OE = Don't Care	0	5.50		±2	
$I_{CCA/B}$	Quiescent Supply Current(7,8)	V_{IN} = V_{CCI} or GND, I_O = 0		1.65–5.50	1.65–5.50		5	µA
I_{CCZ}	Quiescent Supply Current(7)	V_{IN} = V_{CCI} or GND, I_O = 0, OE = V_{IL}		1.65–5.50	1.65–5.50		5	µA
I_{CCA}	Quiescent Supply Current(6)	V_{IN} = 5.5V or GND, I_O = 0, OE = Don't Care, B_n to A_n		0	1.65–5.50		-2	µA
				1.65–5.50	0		2	
I_{CCB}	Quiescent Supply Current(6)	V_{IN} = 5.5V or GND, I_O = 0, OE = Don't Care, A_n to B_n		1.65–5.50	0		-2	µA
				0	1.65–5.50		2	

Notes:

5. This table contains the output voltage for static conditions. Dynamic drive specifications are given in Dynamic Output Electrical Characteristics.
6. "Don't Care" indicates any valid logic level.
7. V_{CCI} is the V_{CC} associated with the input side.
8. Reflects current per supply, V_{CCA} or V_{CCB}.

Downloaded from Arrow.com.

Dynamic Output Electrical Characteristics

Output Rise / Fall Time

Output load: C_L = 50pF, R_{PU} = 2.2kΩ, push / pull driver, and T_A = -40°C to +85°C.

Symbol	Parameter	V_{CCO}[10]				Unit
		4.5 to 5.5V	3.0 to 3.6V	2.3 to 2.7V	1.65 to 1.95V	
		Typical				
t_{rise}	Output Rise Time; A Port, B Port[11]	3	4	5	7	ns
t_{fall}	Output Fall Time; A Port, B Port[12]	11	8	6	4	ns

Notes:
9. Output rise and fall times guaranteed by design simulation and characterization; not production tested.
10. V_{CCO} is the V_{CC} associated with the output side.
11. *See Figure 11*.
12. *See Figure 12*.

Maximum Data Rate[13]

Output load: C_L = 50pF, R_{PU} = 2.2kΩ, push-pull driver, and T_A = -40°C to +85°C.

V_{CCA}	Direction	V_{CCB}				Unit
		4.5 to 5.5V	3.0 to 3.6V	2.3 to 2.7V	1.65 to 1.95V	
		Minimum				
4.5V to 5.5V	A to B	26	20	16	9	MHz
	B to A	26	20	16	9	
3.0V to 3.6V	A to B	26	20	16	9	MHz
	B to A	26	20	16	9	
2.3V to 2.7V	A to B	26	20	16	9	MHz
	B to A	26	20	16	9	
1.65V to 1.95V	A to B	26	20	16	9	MHz
	B to A	26	20	16	9	

Note:
13. F-toggle guaranteed by design simulation; not production tested.

Downloaded from Arrow.com.

AC Characteristics[17]

Output Load: C_L = 50pF, R_{PU} = 2.2kΩ, and T_A = -40°C to +85°C.

Symbol	Parameter	V_{CCB}								Units
		4.5 to 5.5V		3.0 to 3.6V		2.3 to 2.7V		1.65 to 1.95V		
		Typ.	Max.	Typ.	Max.	Typ.	Max.	Typ.	Max.	
V_{CCA} = 4.5 to 5.5V										
t_{PLH}	A to B	1	3	1	3	1	3	1	3	ns
	B to A	1	3	2	4	3	5	4	7	
t_{PHL}	A to B	2	4	3	5	4	6	6	7	ns
	B to A	2	4	2	5	2	6	5	7	
t_{PZL}	OE to A	4	5	6	10	5	9	7	15	ns
	OE to B	3	5	4	7	5	8	10	15	
t_{PLZ}	OE to A	65	100	65	105	65	105	65	105	ns
	OE to B	5	9	6	10	7	12	9	16	
t_{skew}	A Port, B Port[14]	0.5	1.5	0.5	1.0	0.5	1.0	0.5	1.0	ns
V_{CCA} = 3.0 to 3.6V										
t_{PLH}	A to B	2.0	5.0	1.5	3.0	1.5	3.0	1.5	3.0	ns
	B to A	1.5	3.0	1.5	4.0	2.0	6.0	3.0	9.0	
t_{PHL}	A to B	2	4	2	4	2	5	6	7	ns
	B to A	2	4	2	4	2	5	3	5	
t_{PZL}	OE to A	4	8	5	9	6	11	7	15	ns
	OE to B	4	8	6	9	8	11	10	14	
t_{PLZ}	OE to A	100	115	100	115	100	115	100	115	ns
	OE to B	5	10	4	8	5	10	9	15	
t_{skew}	A Port, B Port[14]	0.5	1.5	0.5	1.0	0.5	1.0	0.5	1.0	ns
V_{CCA} = 2.3 to 2.7V										
t_{PLH}	A to B	2.5	5.0	2.5	5.0	2.0	4.0	1.0	3.0	ns
	B to A	1.5	3.0	2.0	4.0	3.0	6.0	5.0	10.0	
t_{PHL}	A to B	2	5	2	5	2	5	5	6	ns
	B to A	2	5	2	5	2	5	3	6	
t_{PZL}	OE to A	5	10	5	10	6	12	9.0	18.0	ns
	OE to B	4.0	8.0	4.5	9.0	5.0	10.0	9.0	18.0	
t_{PLZ}	OE to A	100	115	100	115	100	115	100	115	ns
	OE to B	65	110	65	110	65	115	12	25	
t_{skew}	A Port, B Port[14]	0.5	1.5	0.5	1.0	0.5	1.0	0.5	1.0	ns
V_{CCA} = 1.65 to 1.95V										
t_{PLH}	A to B	4.0	7.0	40.	7.0	5.0	8.0	5.0	10.0	ns
	B to A	1.0	2.0	1.0	2.0	1.5	3.0	5.0	10.0	
t_{PHL}	A to B	5	8	3	7	3	7	8	9	ns
	B to A	4	8	3	7	3	7	3	7	
t_{PZL}	OE to A	11	15	11	14	14	28	14	23	ns
	OE to B	6	14	6	14	6	14	9	19	
t_{PLZ}	OE to A	75	115	75	115	75	115	75	115	ns
	OE to B	75	115	75	115	75	115	75	115	
t_{skew}	A Port, B Port[14]	0.5	1.5	0.5	1.0	0.5	1.0	0.5	1.0	ns

Note:

14. Skew is the variation of propagation delay between output signals and applies only to output signals on the same port (A_n or B_n) and switching with the same polarity (LOW-to-HIGH or HIGH-to-LOW) *(see Figure 14)*. Skew is guaranteed, but not tested.
15. AC Characteristic is guaranteed by Design and Characterization.

Downloaded from Arrow.com.

Capacitance

T_A = +25°C.

Symbol	Parameter	Condition	Typical	Unit
C_{IN}	Input Capacitance Control Pin (OE)	V_{CCA} = V_{CCB} = GND	2.2	pF
$C_{I/O}$	Input / Output Capacitance, A_n, B_n	V_{CCA} = V_{CCB} = 5.0V, OE = GND	13.0	pF
C_{pd}	Power Dissipation Capacitance	V_{CCA} = V_{CCB} = 5.0V, V_{IN} = 0V or V_{CC}, f = 400KHz	13.5	pF

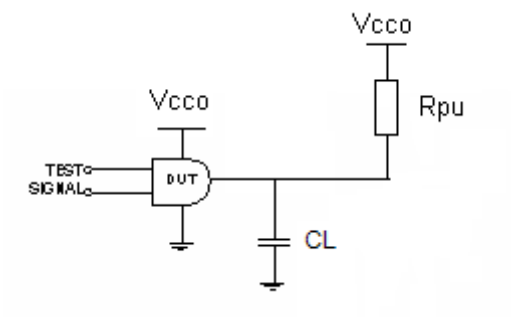

Figure 7. AC Test Circuit

Table 1. Propagation Delay Table[17]

Test	Input Signal	Output Enable Control
t_{PLH}, t_{PHL}	Data Pulses	V_{CCA}
t_{PZL} (OE to A_n, B_n)	0V	LOW to HIGH Switch
t_{PLZ} (OE to A_n, B_n)	0V	HIGH to LOW Switch

Table 2. AC Load Table

V_{CCO}	C_L	R_L
1.8 ± 0.15V	50pF	2.2kΩ
2.5 ± 0.2V	50pF	2.2kΩ
3.3 ± 0.3V	50pF	2.2kΩ
5.0 ± 0.5V	50pF	2.2kΩ

Downloaded from Arrow.com.

Timing Diagrams

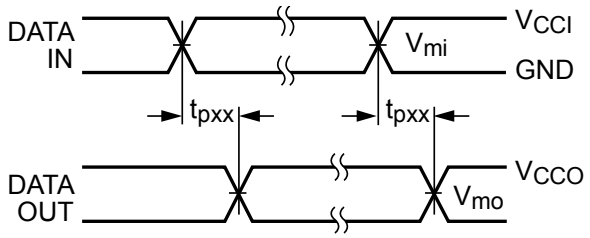

Figure 8. Waveform for Inverting and Non-Inverting Functions[16]

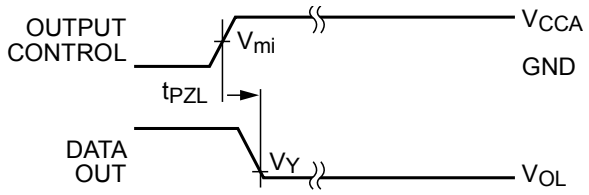

Figure 9. 3-STATE Output Low Enable Time[16]

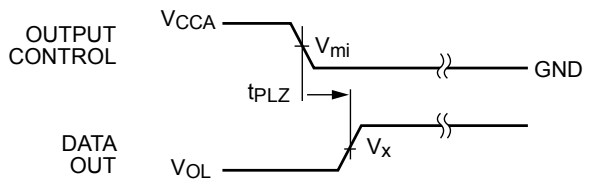

Figure 10. 3-STATE Output High Enable Time[16]

Symbol	V_{CC}
V_{mi}	V_{CCI} / 2
V_{mo}	V_{CCO} / 2
V_X	0.5 x V_{CCO}
V_Y	0.1 x V_{CCO}

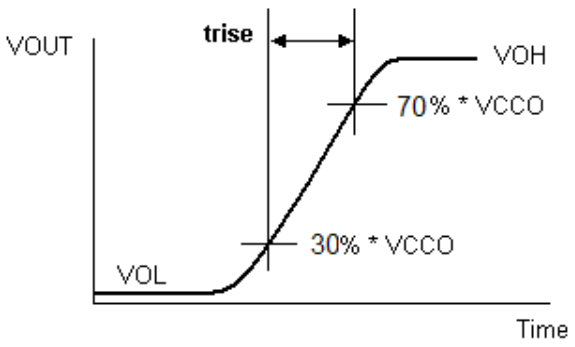

Figure 11. Active Output Rise Time

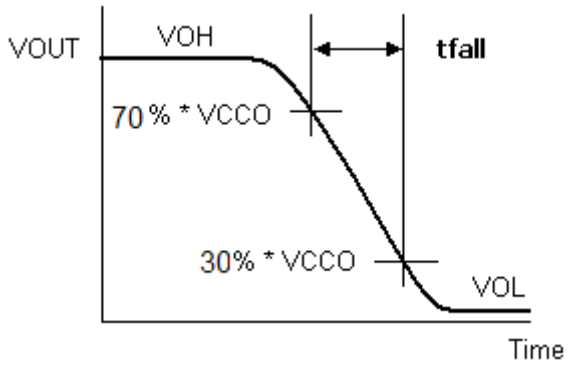

Figure 12. Active Output Fall Time

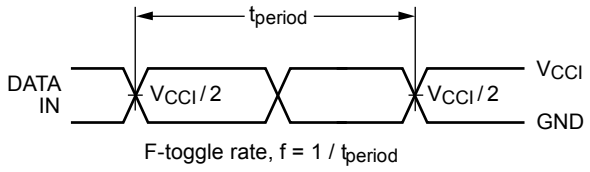

Figure 13. F-Toggle Rate

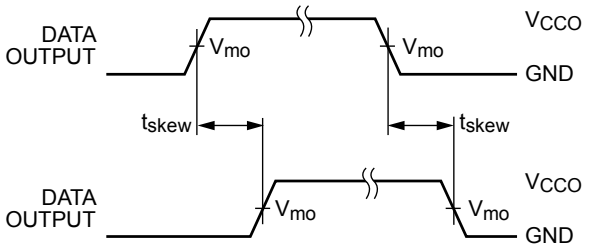

$t_{skew} = (t_{pHLmax} - t_{pHLmin})$ or $(t_{pLHmax} - t_{pLHmin})$

Figure 14. Output Skew Time

Notes:

16. Input $t_R = t_F$ = 2.0ns, 10% to 90% at V_{IN} = 1.65V to 1.95V;
    Input $t_R = t_F$ = 2.0ns, 10% to 90% at V_{IN} = 2.3 to 2.7V;
    Input $t_R = t_F$ = 2.5ns, 10% to 90%, at V_{IN} = 3.0V to 3.6V only;
    Input $t_R = t_F$ = 2.5ns, 10% to 90%, at V_{IN} = 4.5V to 5.5 only.
17. $V_{CCI} = V_{CCA}$ for control pin OE or $V_{mi} = (V_{CCA} / 2)$.

Downloaded from Arrow.com.

Physical Dimensions

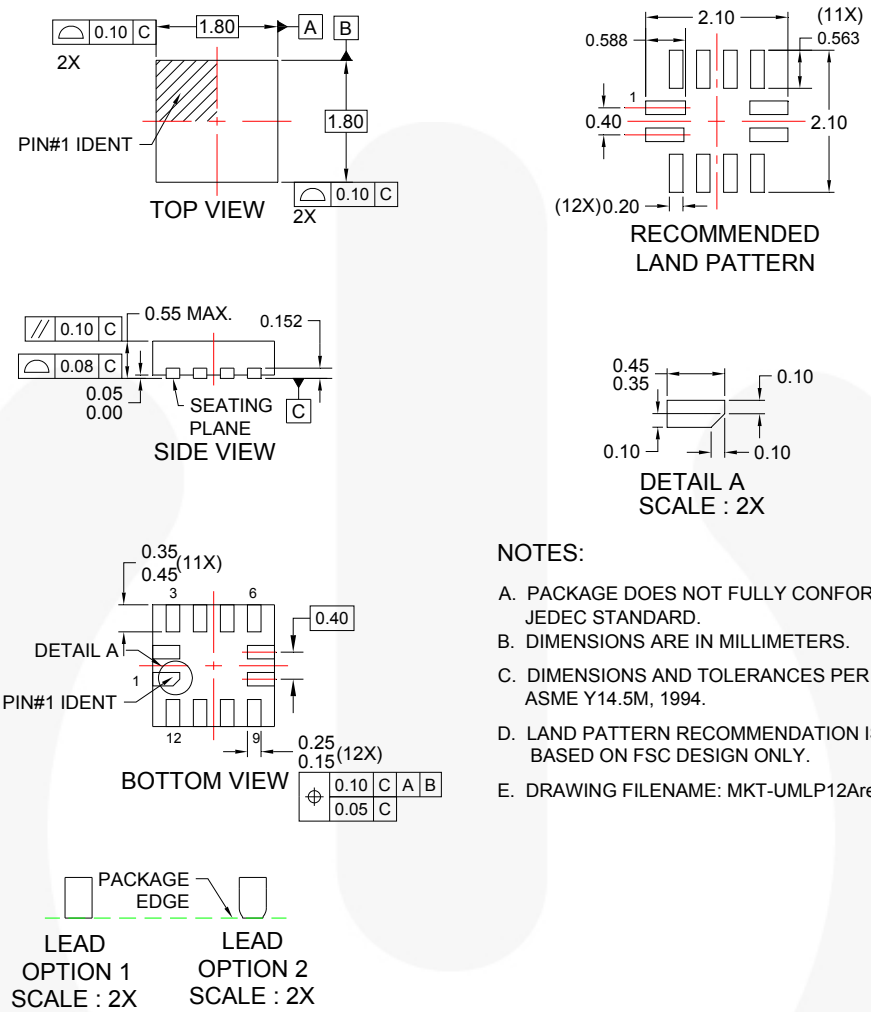

NOTES:

A. PACKAGE DOES NOT FULLY CONFORM TO JEDEC STANDARD.
B. DIMENSIONS ARE IN MILLIMETERS.
C. DIMENSIONS AND TOLERANCES PER ASME Y14.5M, 1994.
D. LAND PATTERN RECOMMENDATION IS BASED ON FSC DESIGN ONLY.
E. DRAWING FILENAME: MKT-UMLP12Arev4.

Figure 15. 12-Lead Ultrathin MLP, 1.8mm x 1.8mm

Package drawings are provided as a service to customers considering Fairchild components. Drawings may change in any manner without notice. Please note the revision and/or date on the drawing and contact a Fairchild Semiconductor representative to verify or obtain the most recent revision. Package specifications do not expand the terms of Fairchild's worldwide terms and conditions, specifically the warranty therein, which covers Fairchild products.

Always visit Fairchild Semiconductor's online packaging area for the most recent package drawings: http://www.fairchildsemi.com/packaging/.

Downloaded from Arrow.com.

FAIRCHILD SEMICONDUCTOR®

TRADEMARKS

The following includes registered and unregistered trademarks and service marks, owned by Fairchild Semiconductor and/or its global subsidiaries, and is not intended to be an exhaustive list of all such trademarks.

2Cool™
AccuPower™
AX-CAP™*
BitSiC™
Build it Now™
CorePLUS™
CorePOWER™
CROSSVOLT™
CTL™
Current Transfer Logic™
DEUXPEED®
Dual Cool™
EcoSPARK®
EfficientMax™
ESBC™
F®
Fairchild®
Fairchild Semiconductor®
FACT Quiet Series™
FACT®
FAST®
FastvCore™
FETBench™
FlashWriter®*
FPS™
F-PFS™
FRFET®
Global Power Resource℠
GreenBridge™
Green FPS™
Green FPS™ e-Series™
Gmax™
GTO™
IntelliMAX™
ISOPLANAR™
Making Small Speakers Sound Louder and Better™
MegaBuck™
MICROCOUPLER™
MicroFET™
MicroPak™
MicroPak2™
MillerDrive™
MotionMax™
mWSaver™
OptoHiT™
OPTOLOGIC®
OPTOPLANAR®
PowerTrench®
PowerXS™
Programmable Active Droop™
QFET®
QS™
Quiet Series™
RapidConfigure™
™
Saving our world, 1mW/W/kW at a time™
SignalWise™
SmartMax™
SMART START™
Solutions for Your Success™
SPM®
STEALTH™
SuperFET®
SuperSOT™-3
SuperSOT™-6
SuperSOT™-8
SupreMOS®
SyncFET™
Sync-Lock™
SYSTEM GENERAL®*
The Power Franchise®
the power franchise
TinyBoost™
TinyBuck™
TinyCalc™
TinyLogic®
TINYOPTO™
TinyPower™
TinyPWM™
TinyWire™
TranSiC™
TriFault Detect™
TRUECURRENT®*
µSerDes™
µSerDes
UHC®
Ultra FRFET™
UniFET™
VCX™
VisualMax™
VoltagePlus™
XS™

* Trademarks of System General Corporation, used under license by Fairchild Semiconductor.

DISCLAIMER

FAIRCHILD SEMICONDUCTOR RESERVES THE RIGHT TO MAKE CHANGES WITHOUT FURTHER NOTICE TO ANY PRODUCTS HEREIN TO IMPROVE RELIABILITY, FUNCTION, OR DESIGN. FAIRCHILD DOES NOT ASSUME ANY LIABILITY ARISING OUT OF THE APPLICATION OR USE OF ANY PRODUCT OR CIRCUIT DESCRIBED HEREIN; NEITHER DOES IT CONVEY ANY LICENSE UNDER ITS PATENT RIGHTS, NOR THE RIGHTS OF OTHERS. THESE SPECIFICATIONS DO NOT EXPAND THE TERMS OF FAIRCHILD'S WORLDWIDE TERMS AND CONDITIONS, SPECIFICALLY THE WARRANTY THEREIN, WHICH COVERS THESE PRODUCTS.

LIFE SUPPORT POLICY

FAIRCHILD'S PRODUCTS ARE NOT AUTHORIZED FOR USE AS CRITICAL COMPONENTS IN LIFE SUPPORT DEVICES OR SYSTEMS WITHOUT THE EXPRESS WRITTEN APPROVAL OF FAIRCHILD SEMICONDUCTOR CORPORATION.

As used herein:

1. Life support devices or systems are devices or systems which, (a) are intended for surgical implant into the body or (b) support or sustain life, and (c) whose failure to perform when properly used in accordance with instructions for use provided in the labeling, can be reasonably expected to result in a significant injury of the user.
2. A critical component in any component of a life support, device, or system whose failure to perform can be reasonably expected to cause the failure of the life support device or system, or to affect its safety or effectiveness.

ANTI-COUNTERFEITING POLICY

Fairchild Semiconductor Corporation's Anti-Counterfeiting Policy. Fairchild's Anti-Counterfeiting Policy is also stated on our external website, www.fairchildsemi.com, under Sales Support.

Counterfeiting of semiconductor parts is a growing problem in the industry. All manufacturers of semiconductor products are experiencing counterfeiting of their parts. Customers who inadvertently purchase counterfeit parts experience many problems such as loss of brand reputation, substandard performance, failed applications, and increased cost of production and manufacturing delays. Fairchild is taking strong measures to protect ourselves and our customers from the proliferation of counterfeit parts. Fairchild strongly encourages customers to purchase Fairchild parts either directly from Fairchild or from Authorized Fairchild Distributors who are listed by country on our web page cited above. Products customers buy either from Fairchild directly or from Authorized Fairchild Distributors are genuine parts, have full traceability, meet Fairchild's quality standards for handling and storage and provide access to Fairchild's full range of up-to-date technical and product information. Fairchild and our Authorized Distributors will stand behind all warranties and will appropriately address any warranty issues that may arise. Fairchild will not provide any warranty coverage or other assistance for parts bought from Unauthorized Sources. Fairchild is committed to combat this global problem and encourage our customers to do their part in stopping this practice by buying direct or from authorized distributors.

PRODUCT STATUS DEFINITIONS

Definition of Terms

Datasheet Identification	Product Status	Definition
Advance Information	Formative / In Design	Datasheet contains the design specifications for product development. Specifications may change in any manner without notice.
Preliminary	First Production	Datasheet contains preliminary data; supplementary data will be published at a later date. Fairchild Semiconductor reserves the right to make changes at any time without notice to improve design.
No Identification Needed	Full Production	Datasheet contains final specifications. Fairchild Semiconductor reserves the right to make changes at any time without notice to improve the design.
Obsolete	Not In Production	Datasheet contains specifications on a product that is discontinued by Fairchild Semiconductor. The datasheet is for reference information only.

Rev. I62

Downloaded from Arrow.com.

ON Semiconductor and ON are trademarks of Semiconductor Components Industries, LLC dba ON Semiconductor or its subsidiaries in the United States and/or other countries. ON Semiconductor owns the rights to a number of patents, trademarks, copyrights, trade secrets, and other intellectual property. A listing of ON Semiconductor's product/patent coverage may be accessed at www.onsemi.com/site/pdf/Patent−Marking.pdf. ON Semiconductor reserves the right to make changes without further notice to any products herein. ON Semiconductor makes no warranty, representation or guarantee regarding the suitability of its products for any particular purpose, nor does ON Semiconductor assume any liability arising out of the application or use of any product or circuit, and specifically disclaims any and all liability, including without limitation special, consequential or incidental damages. Buyer is responsible for its products and applications using ON Semiconductor products, including compliance with all laws, regulations and safety requirements or standards, regardless of any support or applications information provided by ON Semiconductor. "Typical" parameters which may be provided in ON Semiconductor data sheets and/or specifications can and do vary in different applications and actual performance may vary over time. All operating parameters, including "Typicals" must be validated for each customer application by customer's technical experts. ON Semiconductor does not convey any license under its patent rights nor the rights of others. ON Semiconductor products are not designed, intended, or authorized for use as a critical component in life support systems or any FDA Class 3 medical devices or medical devices with a same or similar classification in a foreign jurisdiction or any devices intended for implantation in the human body. Should Buyer purchase or use ON Semiconductor products for any such unintended or unauthorized application, Buyer shall indemnify and hold ON Semiconductor and its officers, employees, subsidiaries, affiliates, and distributors harmless against all claims, costs, damages, and expenses, and reasonable attorney fees arising out of, directly or indirectly, any claim of personal injury or death associated with such unintended or unauthorized use, even if such claim alleges that ON Semiconductor was negligent regarding the design or manufacture of the part. ON Semiconductor is an Equal Opportunity/Affirmative Action Employer. This literature is subject to all applicable copyright laws and is not for resale in any manner.

PUBLICATION ORDERING INFORMATION

LITERATURE FULFILLMENT:
Literature Distribution Center for ON Semiconductor
19521 E. 32nd Pkwy, Aurora, Colorado 80011 USA
Phone: 303−675−2175 or 800−344−3860 Toll Free USA/Canada
Fax: 303−675−2176 or 800−344−3867 Toll Free USA/Canada
Email: orderlit@onsemi.com

N. American Technical Support: 800−282−9855 Toll Free USA/Canada
Europe, Middle East and Africa Technical Support:
Phone: 421 33 790 2910
Japan Customer Focus Center
Phone: 81−3−5817−1050

ON Semiconductor Website: **www.onsemi.com**

Order Literature: http://www.onsemi.com/orderlit

For additional information, please contact your local Sales Representative

Downloaded from Arrow.com.