MS Series

The MS series of cable end float switches are designed for controlling levels in large tanks, cisterns or reservoirs and can be directly installed on submersible pumps. The casing is manufactured in blow moulded Polyethylene (PEHD), with 5m PVC cable with protective earth conductor as standard. The switching element is a microswitch, with UL, VDE and CENELEC approvals, activated by a moving stainless steel ball and having an electrical life of 200,000 operations. Non hygroscopic closed cell expanded polyurethane is injected around the switch housing within the outer casing, hermetically sealing the unit. It is capable of working down to 100 metres depth in water.

Version with polyurethane cable is for use in fuel oils.

Technical Specifications

Cynergy3 Part		**MS10A**	**MS10B**	**MS20A**	**MS10AU**
Contact Form		N/O	N/C	N/O	N/O
Switching Current Max. Resistive		10A	10A	20A	10A
Switching Current Max.	AC	4A	4A	8 A	4A
Inductive	DC	1 A	1A	2A	1A
Power Rating	AC VA	750	750	1500	750
Max	DC W	180	180	360	180
Switching Voltage	AC V	250			
Max	DC V	110			
Cable Material		PVC		Polyurethane	
Cable length		5m with protective earth wire included			
Body Material		High Density Polyethylene			
Temp Range	°C	0 / +55			
	°F	+ 32 / +131			
Max. working pressure	bar	10			

MECHANICAL

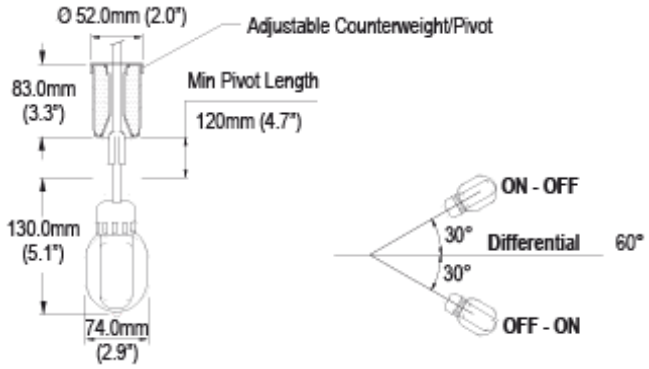

- **Direct power switching**
- **Cable mounting**
- **100 metre depth capability**

Cynergy3 Components Ltd
7 Cobham Road
Ferndown Industrial Estate
Wimborne
Dorset BH21 7PE
Tel: +44 (0) 1202 897969
sales@cynergy3.com
www.cynergy3.com

ISO 9001 CERTIFIED

www.cynergy3.com

© 2011 Cynergy3 Components, All Rights Reserved. Specifications are subject to change without prior notice. Cynergy3 Components and the Cynergy3 Components logo are trademarks of Cynergy3 Components Limited.

Downloaded from Arrow.com.

MS Series

Part Numbering System

MS 10 A U 10

Series

Max. current

Contact Form
A = n/o
B = n/c
C = c/o

Cable length in metres:
Blank = 5M standard

Cable covering:
Blank = PVC
U = Polyurethane
W = WRC approved

Installation

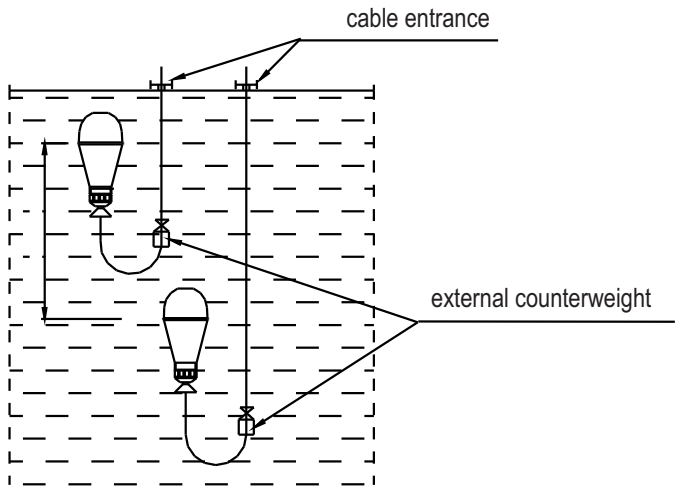

wiring diagram for filling pump

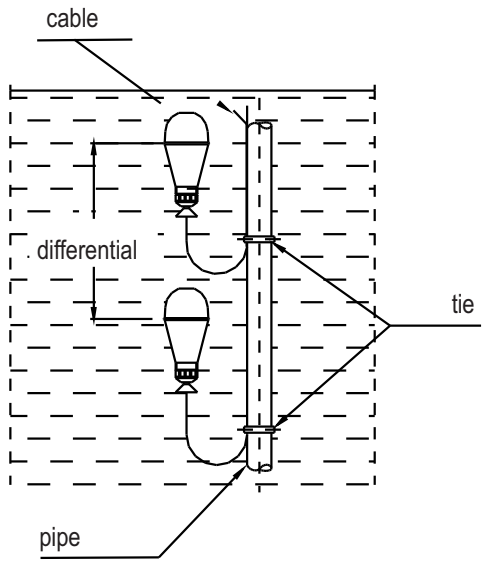

wiring diagram for emptying pump

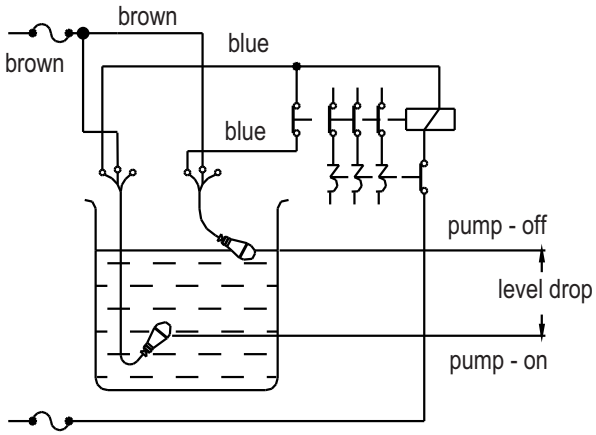

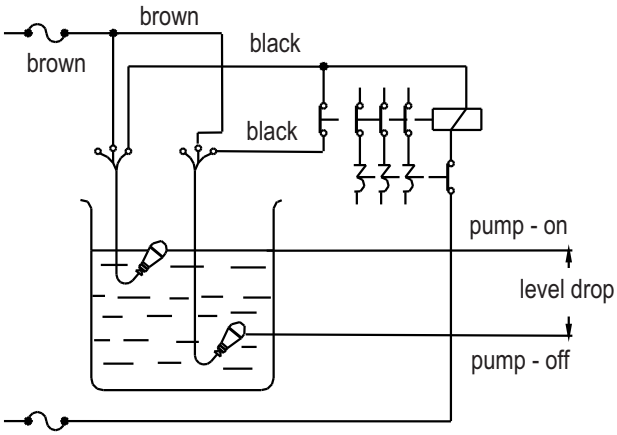

ISO 9001 CERTIFIED

www.cynergy3.com

© 2011 Cynergy3 Components, All Rights Reserved. Specifications are subject to change without prior notice. Cynergy3 Components and the Cynergy3 Components logo are trademarks of Cynergy3 Components Limited.

Downloaded from Arrow.com.