NEWHAVEN DISPLAY
INTERNATIONAL

Product Specification

NHD-0420DZW-AG5

Character OLED Display Module

NHD-	Newhaven Display
0420-	4 Lines x 20 Characters
DZW-	OLED
A-	Model
G-	Emitting color: Green
5-	5V Power Supply

Newhaven Display International, Inc.
2661 Galvin Court, Elgin, IL 60124 USA

Ph: 847.844.8795 | Fx: 847.844.8796
www.newhavendisplay.com

REACH Compliant

RoHS Compliant

Downloaded from Arrow.com.

Table of Contents

Document Revision History 2
Mechanical Drawing 3
Pin Description 4
Jumper Selection 4
Wiring Diagrams 5
Electrical Characteristics 6
Optical Characteristics 6
Table of Commands 7
Instruction Descriptions 8
Built-in Font Tables 11
How to use CGRAM 15
Timing Characteristics 16
Initialization Sequence 20
Quality Information 22

Additional Resources

- **Support Forum:** https://support.newhavendisplay.com/hc/en-us/community/topics
- **GitHub:** https://github.com/newhavendisplay
- **Example Code:** https://support.newhavendisplay.com/hc/en-us/categories/4409527834135-Example-Code/
- **Knowledge Center:** https://www.newhavendisplay.com/knowledge_center.html
- **Quality Center:** https://www.newhavendisplay.com/quality_center.html
- **Precautions for using LCDs/LCMs:** https://www.newhavendisplay.com/specs/precautions.pdf
- **Warranty / Terms & Conditions:** https://www.newhavendisplay.com/terms.html

Downloaded from Arrow.com.

Document Revision History

Revision	Date	Description	Changed By
0	04/01/2011	Initial Product Release	-
1	05/26/2011	Block Diagram & Jumper Selections Updated	AK
2	06/29/2011	Pin Description Updated	AK
3	07/12/2011	Serial Interface Information & Pin Description Updated	AK
4	08/31/2011	Font Tables Updated	AK
5	09/30/2011	Jumper Selections Updated	AK
6	03/26/2012	Jumper Selections Updated	AK
7	02/08/2013	Optical Characteristics and Mechanical Drawing Updated	JN
8	09/7/2013	Photo of Jumpers (solder pads) Added	AK
9	06/09/2015	Photo of Jumpers (solder pads) Updated	KA
10	06/23/2015	Electrical Characteristics & Brightness Updated	SB
11	02/10/2017	Supply Current Updated	SB
12	04/17/2019	Supply Voltage & Current Updated	SB
13	04/23/2019	Drawing Note Correction	SB
14	08/05/2019	OLED Panel Updated	SB
15	02/25/2021	Controller IC Upgraded; Updated Supply Current, MAX Storage Temperature, Optical Characteristics & Quality Information Part Revision Upgraded from Rev1A to Rev1B	AS
16	09/11/2023	Part Revision Upgraded from Rev1B to Rev 1C	KL

Downloaded from Arrow.com.

Mechanical Drawing

Newhaven Display
NHD-0420DZW-AG5_Rev1C
Date Code

Part Label (type/format may vary)

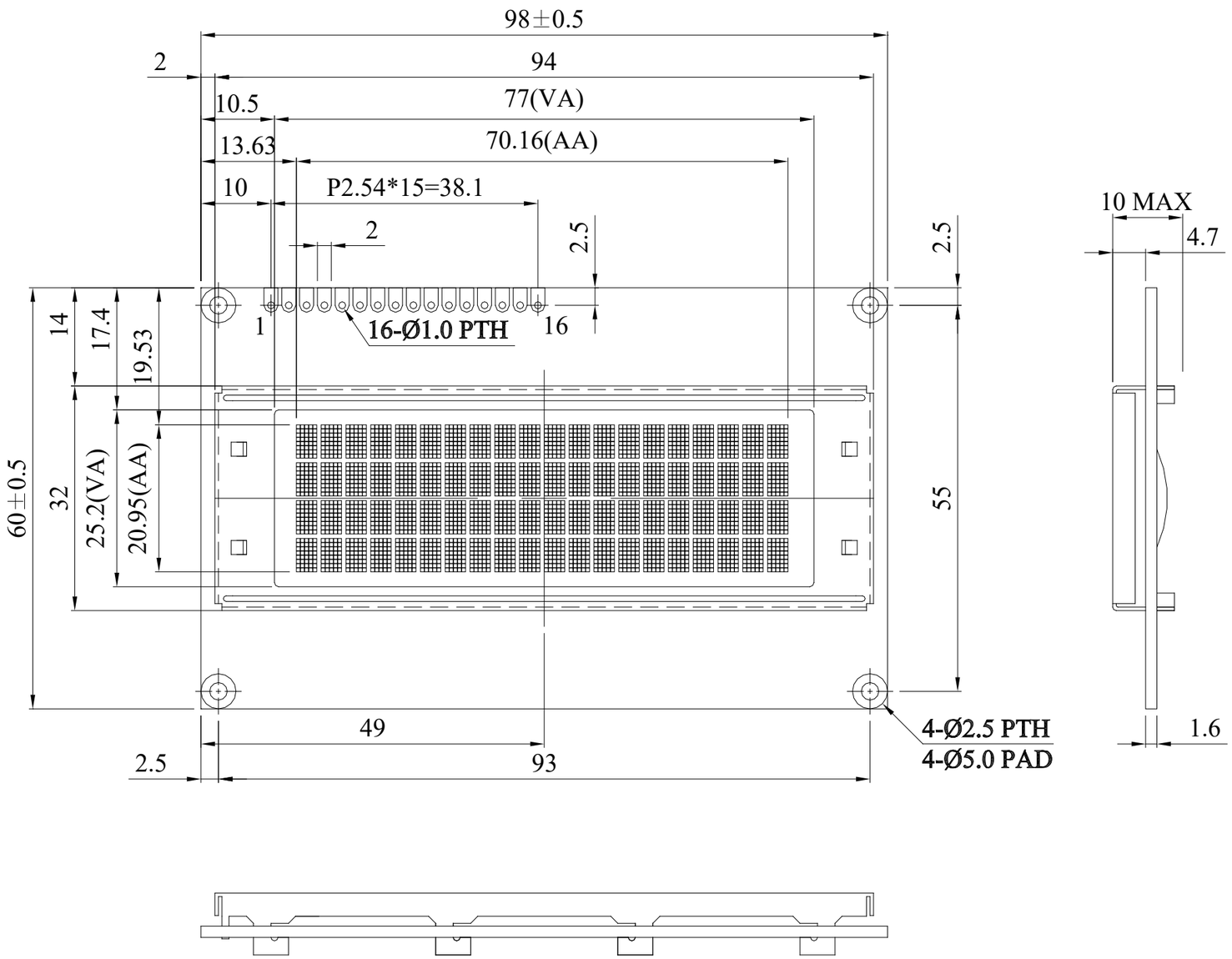

PIN	SYMBOL
1	VSS
2	VDD
3	NC
4	RS
5	R/$\overline{W}$
6	E
7	DB0
8	DB1
9	DB2
10	DB3
11	DB4
12	DB5
13	DB6
14	DB7
15	NC
16	NC

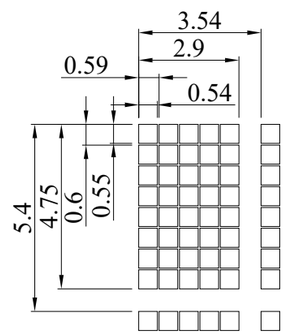

DOT SIZE
SCALE 5/1

Product Description: 4x20 Character OLED

1. Driving Mode: 1/16 Duty
2. Interface: 4/8-bit 6800/8080 Parallel, SPI
3. Power Requirement: 5.0V OLED
4. Optical Features: Green Color, Anti-Glare, Full View
5. Recommended Pin Header: 1x16pin 2.54mm pitch

Standard Tolerance:
(Unless otherwise specified)
Linear: ±0.3mm

NEWHAVEN DISPLAY INTERNATIONAL

Drawing/Part Number: NHD-0420DZW-AG5
Revision: 1C

Unless otherwise specified:
• Dimensions are in Millimeters
• Third Angle Projection

Drawn By: K. Lewis
Drawn Date: 09/11/2023
Approved By: K. Lewis
Approved Date: 09/11/2023

This drawing is solely the property of Newhaven Display International, Inc. The information it contains is not to be disclosed, reproduced or copied in whole or part without written approval from Newhaven Display.

Downloaded from Arrow.com.

Pin Description

Parallel Interface (default):

Pin No.	Symbol	External Connection	Function Description
1	V_{SS}	Power Supply	Ground
2	V_{DD}	Power Supply	Supply Voltage for OLED and Logic
3	NC	-	No Connect
4	RS	MPU	Register Select signal. RS=0: Command, RS=1: Data
5	R/W	MPU	Read/Write select signal, R/W=1: Read R/W: =0: Write
6	E	MPU	Operation Enable signal. Falling edge triggered.
7-10	DB0 – DB3	MPU	Four low order bi-directional three-state data bus lines. These four are not used during 4-bit operation.
11-14	DB4 – DB7	MPU	Four high order bi-directional three-state data bus lines.
15	NC	-	No Connect
16	NC	-	No Connect

Serial Interface:

Pin No.	Symbol	External Connection	Function Description
1	V_{SS}	Power Supply	Ground
2	V_{DD}	Power Supply	Supply Voltage for OLED and Logic
3-11	NC	-	No Connect
12	SCL	MPU	Serial Clock signal
13	SDO	MPU	Serial Data output signal
14	SDI	MPU	Serial Data input signal
15	/CS	MPU	Active LOW Chip Select signal
16	NC	-	No Connect

Jumper Selection

MPU Interface	H_PS_L	J68_J80	H_SHL_L	H_CS1_L	H_CS2_L	JCS1	JCS2
6800-MPU Parallel (default)	H	J68	H	L	H	X	X
8080-MPU Parallel	H	J80	H	L	H	X	X
Serial MPU	L	X	H	Open	Open	Short	Short

X = Don't care

Downloaded from Arrow.com.

Wiring Diagrams

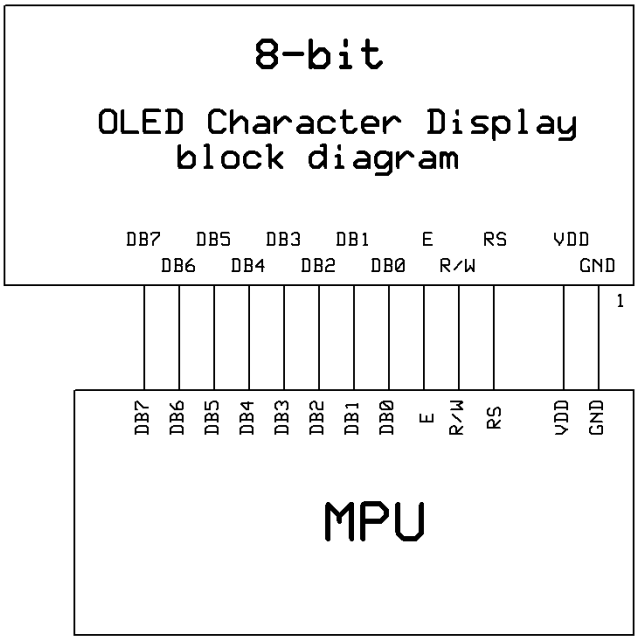

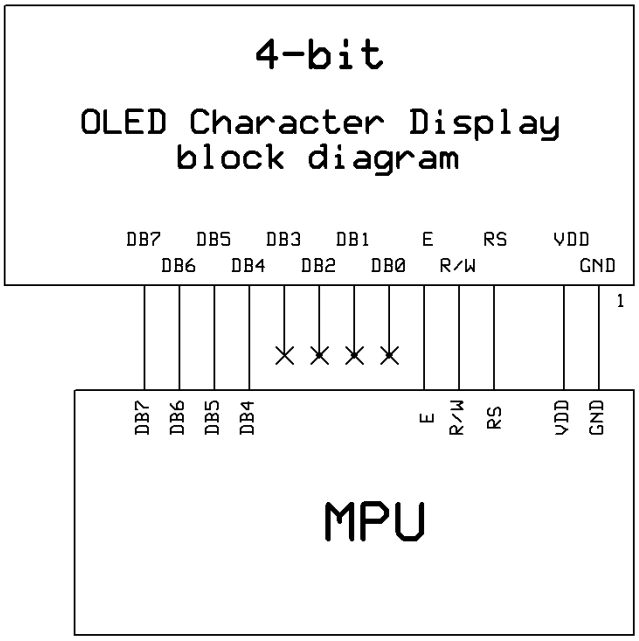

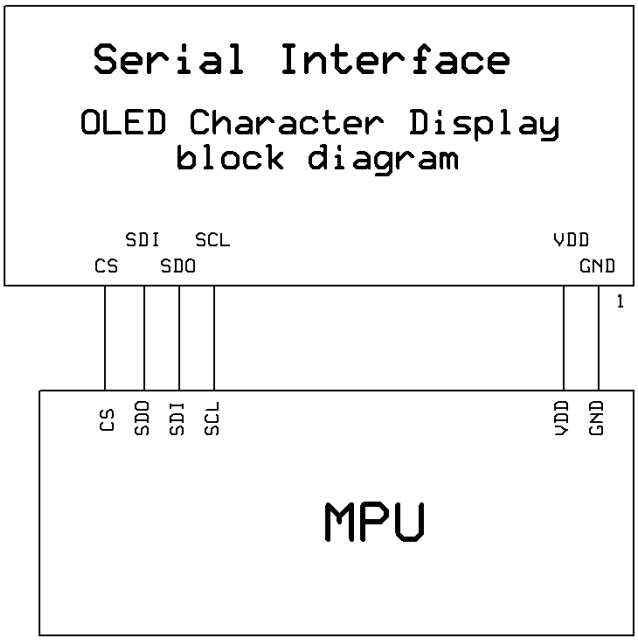

Downloaded from Arrow.com.

Electrical Characteristics

Item	Symbol	Condition	Min.	Typ.	Max.	Unit
Operating Temperature Range	T_{OP}	Absolute Max	-40	-	+80	°C
Storage Temperature Range	T_{ST}	Absolute Max	-40	-	+85	°C
Supply Voltage	V_{DD}	-	4.8	5.0	5.3	V
Supply Current	I_{DD}	T_{OP}=25°C, V_{DD}=5.0V 50% Checkerboard	-	65	97.5	mA
"H" Level input	V_{IH}	-	0.8 * V_{DD}	-	V_{DD}	V
"L" Level input	V_{IL}	-	V_{SS}	-	0.2*V_{DD}	V
"H" Level output	V_{OH}	-	0.8 * V_{DD}	-	V_{DD}	V
"L" Level output	V_{OL}	-	V_{SS}	-	0.2 * V_{DD}	V

Optical Characteristics

Item		Symbol	Condition	Min.	Typ.	Max.	Unit
Optimal Viewing Angles	Top	φY+		80	-	-	°
	Bottom	φY-		80	-	-	°
	Left	θX-		80	-	-	°
	Right	θX+		80	-	-	°
Contrast Ratio		CR	-	10,000:1	-	-	-
Response Time	Rise	T_R	-	-	10	-	µs
	Fall	T_F	-	-	10	-	µs
Brightness[2,3]		-	V_{DD}= 5.0V, T_{OP}= 25°C 50% Checkerboard	70	90	-	cd/m²
Lifetime[1]		-		80,000	100,000	-	Hrs

Note:

1) Lifetime at typical temperature is based on accelerated high-temperature operation. Lifetime is tested at average 50% pixels on and is rated as hours until half-brightness. The Display OFF command can be used to extend the lifetime of the display.

2) Luminance of active pixels will degrade faster than inactive pixels. Residual (burn-in) images may occur. To avoid this, every pixel should be illuminated uniformly. Using a screensaver is highly recommended.

3) Brightness is related to the VDD, the brightness will be dimmer if used with lower voltages.

Downloaded from Arrow.com.

Table of Commands

Instruction	Code										Description	Max Execution Time
	RS	R/W	DB7	DB6	DB5	DB4	DB3	DB2	DB1	DB0		
Clear Display	0	0	**0**	**0**	**0**	**0**	**0**	**0**	**0**	**1**	Clears entire display. **Does not change DDRAM address.**	2ms
Return Home	0	0	**0**	**0**	**0**	**0**	**0**	**0**	**1**	**0**	Sets DDRAM Address to 0x00. Returns shifted display to original position.	600us
Entry Mode Set	0	0	**0**	**0**	**0**	**0**	**0**	**1**	**I/D**	**S**	Sets cursor to auto Increment or Decrement, and sets display shift.	600us
Display ON/OFF control	0	0	**0**	**0**	**0**	**0**	**1**	**D**	**C**	**B**	Sets Display (D) ON/OFF. Sets Cursor (C) ON/OFF. Sets Blinking (B) of cursor ON/OFF.	600us
Cursor/Display Shift	0	0	**0**	**0**	**0**	**1**	**S/C**	**R/L**	**0**	**0**	Moves cursor & shifts display without changing DDRAM contents.	600us
Function Set	0	0	**0**	**0**	**1**	**DL**	**1**	**0**	**FT1**	**FT0**	Set interface data length. Select Font Table.	600us
Set CGRAM address	0	0	**0**	**1**	**ACG5**	**ACG4**	**ACG3**	**ACG2**	**ACG1**	**ACG0**	Move to CGRAM address.	600us
Set DDRAM address	0	0	**1**	**ADD6**	**ADD5**	**ADD4**	**ADD3**	**ADD2**	**ADD1**	**ADD0**	Move to DDRAM address.	600us
Read Busy Flag & Address	0	1	**BF**	**AC6**	**AC5**	**AC4**	**AC3**	**AC2**	**AC1**	**AC0**	Read Busy Flag (BF) and Address Counter.	600us
Write data to CGRAM or DDRAM	1	0	**Write Data**								Write data to CGRAM or DDRAM	600us
Read data from CGRAM or DDRAM	1	1	**Read Data**								Read data from CGRAM or DDRAM	600us

Downloaded from Arrow.com.

Instruction Descriptions

When an instruction is being executed, only the Busy Flag read instruction can be performed. During execution of an instruction, the Busy Flag = “1”. When BF = “0” instructions can be sent to the controller.

Clear Display

RS	R/W	DB7	DB6	DB5	DB4	DB3	DB2	DB1	DB0
0	0	**0**	**0**	**0**	**0**	**0**	**0**	**0**	**1**

This instruction is used to clear the display by writing 0x20 in all DDRAM addresses. This instruction does not change the DDRAM Address.

Return Home

RS	R/W	DB7	DB6	DB5	DB4	DB3	DB2	DB1	DB0
0	0	**0**	**0**	**0**	**0**	**0**	**0**	**1**	**0**

This instruction is used to set the DDRAM Address to 0x00 and shifts the display back to the original state. The cursor (if on) will be at the first line’s left-most character. The DDRAM contents on the display do not change.

Entry Mode Set

RS	R/W	DB7	DB6	DB5	DB4	DB3	DB2	DB1	DB0
0	0	**0**	**0**	**0**	**0**	**0**	**1**	**I/D**	**S**

I/D = Increment/Decrement
When I/D = “1”, the DDRAM or CGRAM Address with automatically increment when a character code is written into or read from the DDRAM or CGRAM. The auto-increment will move the cursor one character space to the right.
When I/D = “0”, the DDRAM or CGRAM Address with automatically decrement when a character code is written into or read from the DDRAM or CGRAM. The auto-decrement will move the cursor one character space to the left.

S = Shift Entire Display
When S = “1”, the entire display is shifted to the right (when I/D = “0”) or left (when I/D = “1”).

I/D=1, S=1

		1	2	3	4	_	Initial display
	1	2	3	4	A	_	Input new character "A"
1	2	3	4	A	B	_	Input new character "B"
2	3	4	A	B	C	_	Input new character "C"
3	4	A	B	C	D	_	Input new character "D"

I/D=0, S=1

1	2	3	4	_			Initial display
	1	2	3	4	A		Input new character "A"
		1	2	3	B	A	Input new character "B"
			1	2	C	B	Input new character "C"
				1	D	C	Input new character "D"

Downloaded from Arrow.com.

Display ON/OFF

RS	R/W	DB7	DB6	DB5	DB4	DB3	DB2	DB1	DB0
0	0	**0**	**0**	**0**	**0**	**1**	**D**	**C**	**B**

D = Display ON/OFF
When D = "1", the display is turned ON. When D = "0", the display is turned OFF. Contents in DDRAM are not changed.

C = Cursor ON/OFF
When C = "1", the cursor is displayed. The cursor is displayed as 5 dots on the 8th line of a character. When C = "0", the cursor is OFF.

B = Blinking Cursor
When B = "1", the entire character specified by the cursor blinks at a speed of 409.6ms intervals. When B = "0", the character does not blink, the cursor remains on.

Cursor/Display Shift

RS	R/W	DB7	DB6	DB5	DB4	DB3	DB2	DB1	DB0
0	0	**0**	**0**	**0**	**1**	**S/C**	**R/L**	**0**	**0**

S/C	R/L	Shift Function
0	**0**	**Shifts the cursor position to the left (AC is decremented by 1).**
0	**1**	**Shifts the cursor position to the right (AC is incremented by 1).**
1	**0**	**Shifts the entire display to the left. The cursor follows the display shift.**
1	**1**	**Shifts the entire display to the right. The cursor follows the display shift.**

When the display is shifted repeatedly, each line moves only horizontally. The second line display does not shift into the first line.
The Address Counter does not change during a Display Shift.

Function Set

RS	R/W	DB7	DB6	DB5	DB4	DB3	DB2	DB1	DB0
0	0	**0**	**0**	**1**	**DL**	**1**	**0**	**FT1**	**FT0**

DL = Interface Data Length
When DL = "1", the data is sent or received in 8-bit length via DB7...DB0.
When DL = "0", the data is sent or received in 4-bit length via DB7...DB4. When the 4-bit data length is used, the data must be sent or received in two consecutive writes/reads to combine the data into full 8-bits.

FT1, FT0 = Font Table Selection

FT1	FT0	Font Table
0	**0**	**English / Japanese**
0	**1**	**Western European #1**
1	**0**	**English / Russian**
1	**1**	**Western European #2**

Note: Changing the font table during operation will immediately change any data currently on the display to the corresponding character on the newly selected font table.

Downloaded from Arrow.com.

Set CGRAM Address

RS	R/W	DB7	DB6	DB5	DB4	DB3	DB2	DB1	DB0
0	0	**0**	**1**	**ACG5**	**ACG4**	**ACG3**	**ACG2**	**ACG1**	**ACG0**

This instruction is used to set the CGRAM address into the Address Counter. Data can then be written to or read from the CGRAM locations. See section: "How to use CGRAM".
ACG5...ACG0 is the binary CGRAM address.

Set DDRAM Address

RS	R/W	DB7	DB6	DB5	DB4	DB3	DB2	DB1	DB0
0	0	**1**	**ADD6**	**ADD5**	**ADD4**	**ADD3**	**ADD2**	**ADD1**	**ADD0**

This instruction is used to set the DDRAM address into the Address Counter. Data can then be written to or read from the DDRAM locations.
ADD6...ADD0 is the binary DDRAM address.
Line 1 = Address 0x00 through 0x13
Line 2 = Address 0x40 through 0x53
Line 3 = Address 0x14 through 0x27
Line 4 = Address 0x54 through 0x67

1	2	3	4	5	6	7	8	9	10	11	12	13	14	15	16	17	18	19	20
00	01	02	03	04	05	06	07	08	09	0A	0B	0C	0D	0E	0F	10	11	12	13
40	41	42	43	44	45	46	47	48	49	4A	4B	4C	4D	4E	4F	50	51	52	53
14	15	16	17	18	19	1A	1B	1C	1D	1E	1F	20	21	22	23	24	25	26	27
54	55	56	57	58	59	5A	5B	5C	5D	5E	5F	60	61	62	63	64	65	66	67

Read Busy Flag and Address Counter

RS	R/W	DB7	DB6	DB5	DB4	DB3	DB2	DB1	DB0
0	1	**BF**	**AC6**	**AC5**	**AC4**	**AC3**	**AC2**	**AC1**	**AC0**

This instruction is used to read the Busy Flag (BF) to indicate if the display controller is performing an internal operation. The Address Counter is read simultaneously with checking the Busy Flag.
When BF = "1", the controller is busy and the next instruction will be ignored.
When BF = "0", the controller is not busy and is ready to accept instructions.
AC6...AC0 is the binary location of either the CGRAM or DDRAM current address.

Write Data to CGRAM or DDRAM

RS	R/W	DB7	DB6	DB5	DB4	DB3	DB2	DB1	DB0
1	0	**Write Data**							

This instruction is used to write 8-bits of data to the CGRAM or DDRAM at the current address counter. After the write is complete, the address is automatically incremented or decremented by 1 according to the Entry Mode.

Read Data from CGRAM or DDRAM

RS	R/W	DB7	DB6	DB5	DB4	DB3	DB2	DB1	DB0
1	1	**Read Data**							

This instruction is used to read 8-bits of data to the CGRAM or DDRAM at the current address counter. After the read is complete, the address is automatically incremented or decremented by 1 according to the Entry Mode.
The Set CGRAM Address or Set DDRAM Address Instruction must be executed before this instruction can be performed, otherwise the first Read Data will not be valid.

Downloaded from Arrow.com.

Built-in Font Tables

English/Japanese (FT[1:0] = 00, default)

Upper 4bit / Lower 4bit	LLLL	LLLH	LLHL	LLHH	LHLL	LHLH	LHHL	LHHH	HLLL	HLLH	HLHL	HLHH	HHLL	HHLH	HHHL	HHHH
LLLL	CG RAM (1)															
LLLH	CG RAM (2)															
LLHL	CG RAM (3)															
LLHH	CG RAM (4)															
LHLL	CG RAM (5)															
LHLH	CG RAM (6)															
LHHL	CG RAM (7)															
LHHH	CG RAM (8)															
HLLL	CG RAM (9)															
HLLH	CG RAM (10)															
HLHL	CG RAM (11)															
HLHH	CG RAM (12)															
HHLL	CG RAM (13)															
HHLH	CG RAM (14)															
HHHL	CG RAM (15)															
HHHH	CG RAM (16)															

Downloaded from Arrow.com.

Western European table 1 (FT[1:0] = 01)

Upper 4bit / Lower 4bit	LLLL	LLLH	LLHL	LLHH	LHLL	LHLH	LHHL	LHHH	HLLL	HLLH	HLHL	HLHH	HHLL	HHLH	HHHL	HHHH
LLLL	CG RAM (1)															
LLLH	CG RAM (2)															
LLHL	CG RAM (3)															
LLHH	CG RAM (4)															
LHLL	CG RAM (5)															
LHLH	CG RAM (6)															
LHHL	CG RAM (7)															
LHHH	CG RAM (8)															
HLLL	CG RAM (9)															
HLLH	CG RAM (10)															
HLHL	CG RAM (11)															
HLHH	CG RAM (12)															
HHLL	CG RAM (13)															
HHLH	CG RAM (14)															
HHHL	CG RAM (15)															
HHHH	CG RAM (16)															

Downloaded from Arrow.com.

English/Russian (FT[1:0] = 10)

Upper / 4bit	LLLL	LLLH	LLHL	LLHH	LHLL	LHLH	LHHL	LHHH	HLLL	HLLH	HLHL	HLHH	HHLL	HHLH	HHHL	HHHH
LLLL	CG RAM (1)															
LLLH	CG RAM (2)															
LLHL	CG RAM (3)															
LLHH	CG RAM (4)															
LHLL	CG RAM (5)															
LHLH	CG RAM (6)															
LHHL	CG RAM (7)															
LHHH	CG RAM (8)															
HLLL	CG RAM (9)															
HLLH	CG RAM (10)															
HLHL	CG RAM (11)															
HLHH	CG RAM (12)															
HHLL	CG RAM (13)															
HHLH	CG RAM (14)															
HHHL	CG RAM (15)															
HHHH	CG RAM (16)															

Downloaded from Arrow.com.

Western European table 2 (FT[1:0] = 11)

Upper 4bit / Lower 4bit	LLLL	LLLH	LLHL	LLHH	LHLL	LHLH	LHHL	LHHH	HLLL	HLLH	HLHL	HLHH	HHLL	HHLH	HHHL	HHHH
LLLL	CG RAM (1)															
LLLH	CG RAM (2)															
LLHL	CG RAM (3)															
LLHH	CG RAM (4)															
LHLL	CG RAM (5)															
LHLH	CG RAM (6)															
LHHL	CG RAM (7)															
LHHH	CG RAM (8)															
HLLL	CG RAM (9)															
HLLH	CG RAM (10)															
HLHL	CG RAM (11)															
HLHH	CG RAM (12)															
HHLL	CG RAM (13)															
HHLH	CG RAM (14)															
HHHL	CG RAM (15)															
HHHH	CG RAM (16)															

Downloaded from Arrow.com.

How to use CGRAM

The Character Generator RAM (CGRAM) is used to generate custom 5x8 character patterns. There are 8 available addresses: CGRAM Address 0x00 through 0x08.

Character Code DDRAM address on Font Table used to write CGRAM character to display	**CGRAM Address**						**Character Patterns (CGRAM data)**								**Character Patterns (CGRAM data)**
	5	4	3	2	1	0	7	6	5	4	3	2	1	0	
0x00	0	0	0	0	0	0	-	-	-	1	1	1	1	0	Character pattern #0
				0	0	1	-	-	-	1	0	0	0	1	
				0	1	0	-	-	-	1	0	0	0	1	
				0	1	1	-	-	-	1	1	1	1	0	
				1	0	0	-	-	-	1	0	1	0	0	
				1	0	1	-	-	-	1	0	0	1	0	
				1	1	0	-	-	-	1	0	0	0	1	
				1	1	1	-	-	-	0	0	0	0	0	Cursor position
0x01	0	0	1	0	0	0	-	-	-	1	0	0	0	1	Character pattern #1
				0	0	1	-	-	-	0	1	0	1	0	
				0	1	0	-	-	-	1	1	1	1	1	
				0	1	1	-	-	-	0	0	1	0	0	
				1	0	0	-	-	-	1	1	1	1	1	
				1	0	1	-	-	-	0	0	1	0	0	
				1	1	0	-	-	-	0	0	1	0	0	
				1	1	1	-	-	-	0	0	0	0	0	Cursor position
0x02...0x06	.	.	.	.	.	.	-	-	-	.	.	.	.	.	
	.	.	.	.	.	.	-	-	-	.	.	.	.	.	
	.	.	.	.	.	.	-	-	-	.	.	.	.	.	
	.	.	.	.	.	.	-	-	-	.	.	.	.	.	
0x07	1	1	1	0	0	0	-	-	-	0	0	0	0	0	Character pattern #7
				0	0	1	-	-	-	0	1	0	1	0	
				0	1	0	-	-	-	0	0	0	0	0	
				0	1	1	-	-	-	0	0	0	0	0	
				1	0	0	-	-	-	1	0	0	0	1	
				1	0	1	-	-	-	0	1	1	1	0	
				1	1	0	-	-	-	0	0	1	0	0	
				1	1	1	-	-	-	0	0	0	0	0	Cursor position

Notes:
"-" = Not used
The cursor line position can be used, it will be displayed as a logic-OR if the cursor is turned ON.
CGRAM is stored in positions 0x00 through 0x07 of the font table. Therefore, to write the first CGRAM character to the display, you would move the cursor to the desired DDRAM location on the display and write character data 0x00.

Downloaded from Arrow.com.

Timing Characteristics

MPU Interface

When DL is set for 8-bit mode, the display interfaces with the MPU with DB7...DB0 (DB7 is the MSB).
When DL is set for 4-bit mode, the display interfaces with the MPU with only DB7...DB4 (DB7 is the MSB). Each instruction must be sent in two operations, the 4 high-order bits first, followed by the 4 low-order bits. The Busy Flag must be checked after completion of the entire 8-bit instruction.

6800-MPU Parallel Interface (default)

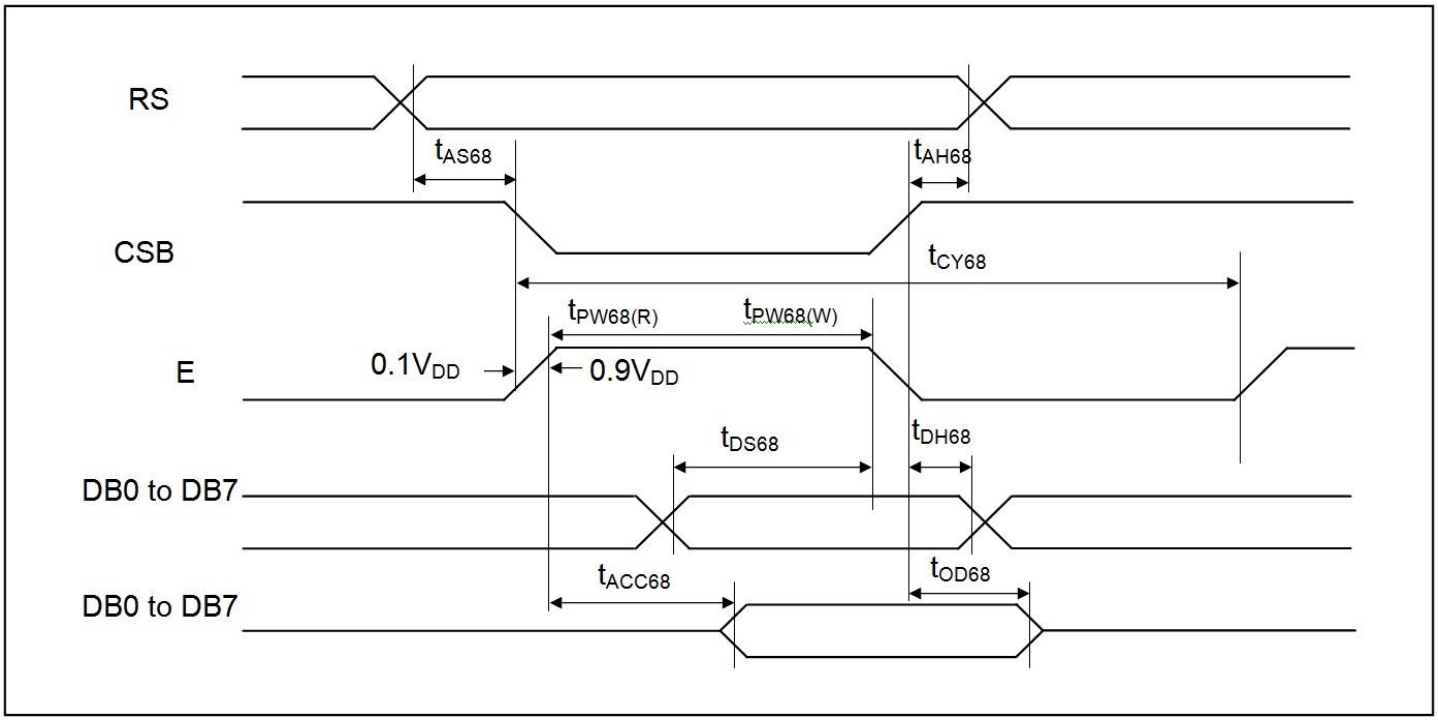

Item	Signal	Symbol	Min.	Typ.	Max.	Unit	Note
Address setup time	RS	tAS68	20	-	-	ns	
Address hold time	RS	tAH68	0	-	-	ns	
System cycle time		tCY68	500	-	-	ns	
Pulse width (write)	E	tPW68(W)	250	-	-	ns	
Pulse width (read)	E	tPW68(R)	250	-	-	ns	
Data setup time	DB7...DB0	tDS68	40	-	-	ns	
Data hold time	DB7...DB0	tDH68	20	-	-	ns	
Read access time	DB7...DB0	tACC68	-	-	180	ns	CL=100pF
Output disable time	DB7...DB0	tOD68	10	-	-	ns	

Downloaded from Arrow.com.

8080-MPU Parallel Interface

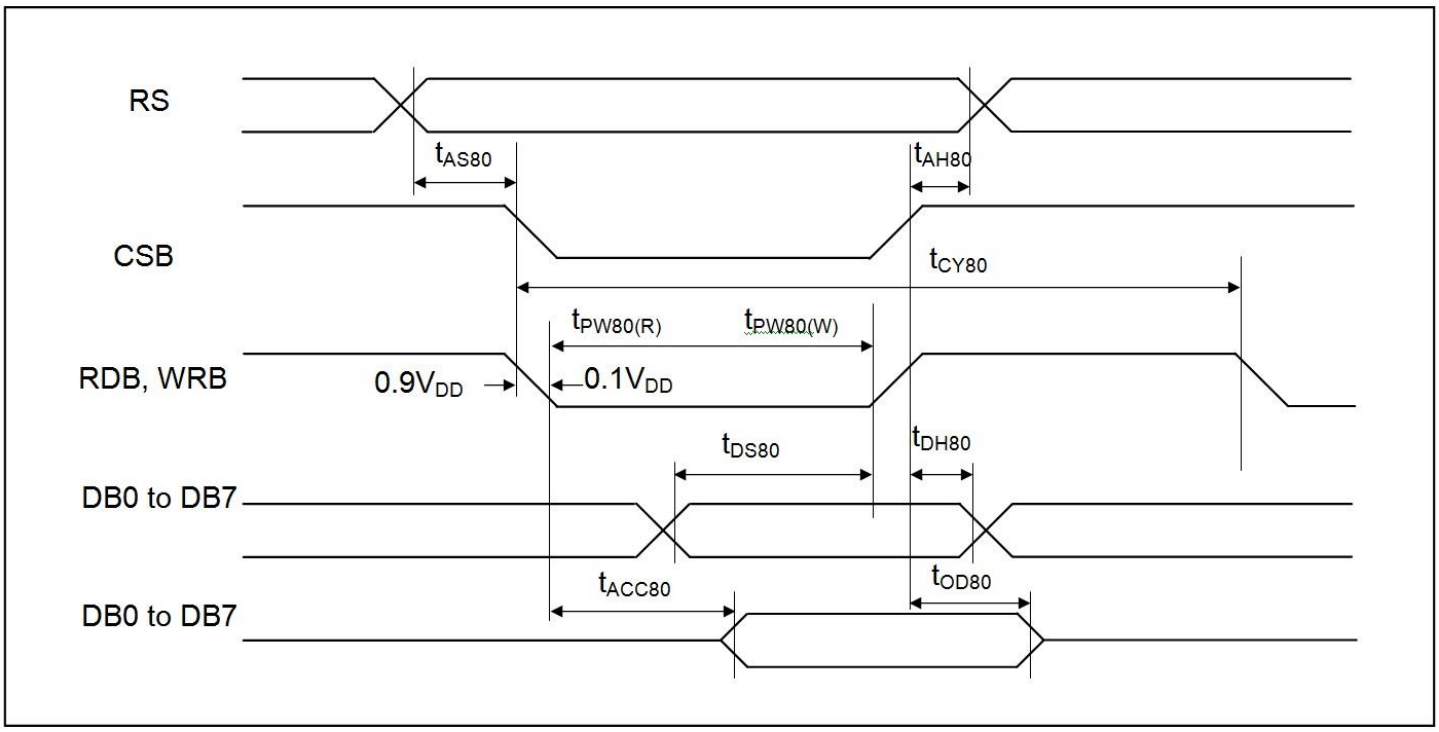

Item	Signal	Symbol	Min.	Typ.	Max.	Unit	Note
Address setup time	RS	tAS80	20	-	-	ns	
Address hold time	RS	tAH80	0	-	-	ns	
System cycle time		tCY80	500	-	-	ns	
Pulse width (write)	/WR	tPW80(W)	250	-	-	ns	
Pulse width (read)	/RD	tPW80(R)	250	-	-	ns	
Data setup time	DB7...DB0	tDS80	40	-	-	ns	
Data hold time	DB7...DB0	tDH80	20	-	-	ns	
Read access time	DB7...DB0	tACC80	-	-	180	ns	CL=100pF
Output disable time	DB7...DB0	tOD80	10	-	-	ns	

Downloaded from Arrow.com.

Serial Interface

In serial interface mode, instructions and data are both sent on the SDI line and clocked in with the SCL line.
/CS must go LOW before transmission, and must go HIGH when switching between writing instructions and writing data.
The data on SDI is clocked into the LCD controller on the rising edge of SCL in the following format:

Instruction transmission:

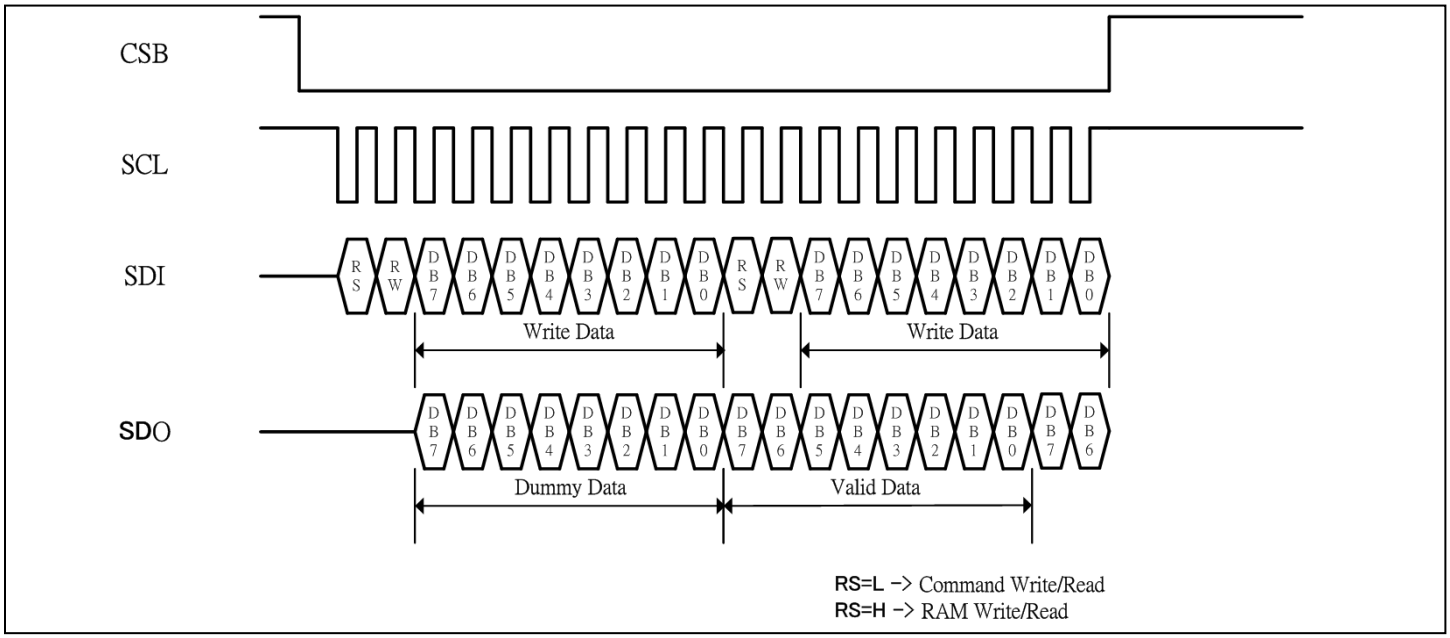

*Note: RS and RW should be used between each instruction.

Data transmission:

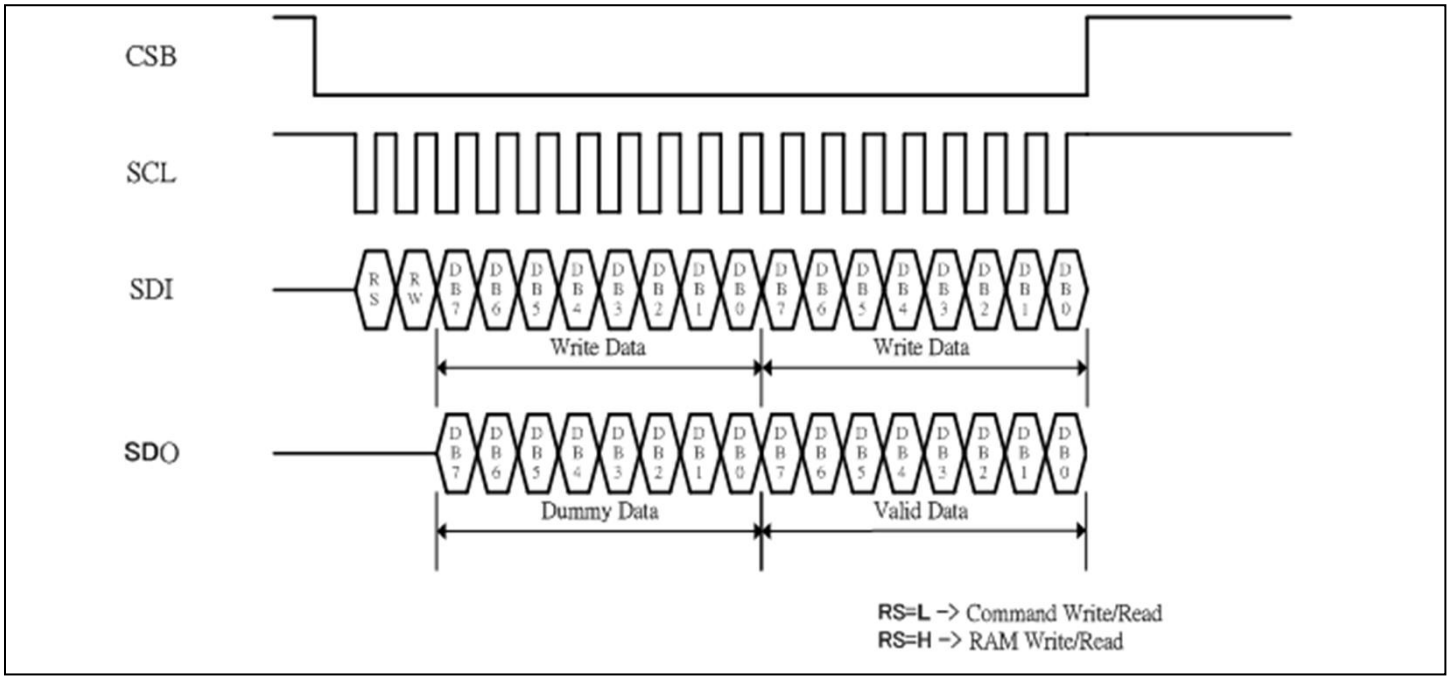

*Note: RS and RW only need to be set at the start of continuous data transmission.

Downloaded from Arrow.com.

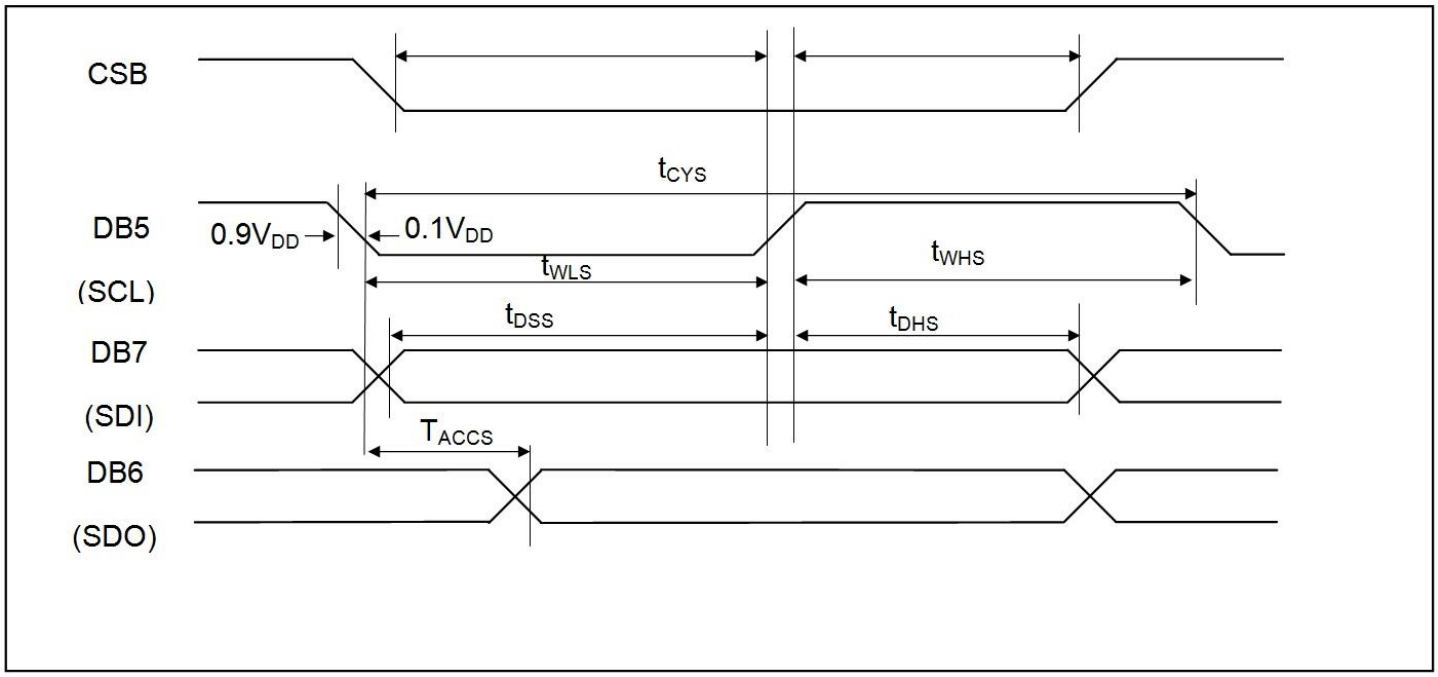

Item	Signal	Symbol	Min.	Typ.	Max.	Unit	Note
Serial clock cycle	DB5 (SCL)	tCYS	300	-	-	ns	
SCL high pulse width	DB5 (SCL)	tWHS	100	-	-	ns	
SCL low pulse width	DB5 (SCL)	tWLS	100	-	-	ns	
CSB setup time	CSB	tCSS	150	-	-	ns	
CSB hold time	CSB	tCHS	150	-	-	ns	
Data setup time	DB7 (SDI)	tDSS	100	-	-	ns	
Data hold time	DB7 (SDI)	tDHS	100	-	-	ns	
Read access time	DB6 (SDO)	tACCS	-	-	80	ns	

Downloaded from Arrow.com.

Initialization Sequence

8-bit mode:

Power ON

Wait for power stabilization: ≥ 500ms

Function Set:

RS	R/W	DB7	DB6	DB5	DB4	DB3	DB2	DB1	DB0
0	0	0	0	1	1	1	0	X	X

Check BUSY flag

Display OFF:

RS	R/W	DB7	DB6	DB5	DB4	DB3	DB2	DB1	DB0
0	0	0	0	0	0	1	0	X	X

Check BUSY flag

Display Clear:

RS	R/W	DB7	DB6	DB5	DB4	DB3	DB2	DB1	DB0
0	0	0	0	0	0	0	0	0	1

Check BUSY flag

Entry Mode Set:

RS	R/W	DB7	DB6	DB5	DB4	DB3	DB2	DB1	DB0
0	0	0	0	0	0	0	1	1	0

Check BUSY flag

Home Command:

RS	R/W	DB7	DB6	DB5	DB4	DB3	DB2	DB1	DB0
0	0	0	0	0	0	0	0	1	0

Check BUSY flag

Display ON:

RS	R/W	DB7	DB6	DB5	DB4	DB3	DB2	DB1	DB0
0	0	0	0	0	0	1	1	X	X

Initialization End

Downloaded from Arrow.com.

4-bit mode:

Power ON

Wait for power stabilization: ≥ 500ms

Function Set:

RS	R/W	DB7	DB6	DB5	DB4
0	0	**0**	**0**	**1**	**0**
0	0	**0**	**0**	**1**	**0**
0	0	**1**	**0**	**X**	**X**

Check BUSY flag

Display OFF:

RS	R/W	DB7	DB6	DB5	DB4
0	0	**0**	**0**	**0**	**0**
0	0	**1**	**0**	**X**	**X**

Check BUSY flag

Display Clear:

RS	R/W	DB7	DB6	DB5	DB4
0	0	**0**	**0**	**0**	**0**
0	0	**0**	**0**	**0**	**1**

Check BUSY flag

Entry Mode Set:

RS	R/W	DB7	DB6	DB5	DB4
0	0	**0**	**0**	**0**	**0**
0	0	**0**	**1**	**1**	**0**

Check BUSY flag

Home Command:

RS	R/W	DB7	DB6	DB5	DB4
0	0	**0**	**0**	**0**	**0**
0	0	**0**	**0**	**1**	**0**

Check BUSY flag

Display ON:

RS	R/W	DB7	DB6	DB5	DB4
0	0	**0**	**0**	**0**	**0**
0	0	**1**	**1**	**X**	**X**

Initialization End

Downloaded from Arrow.com.

Quality Information

Test Item	Content of Test	Test Condition	Note
High Temperature storage	Test the endurance of the display at high storage temperature.	+85°C , 240hrs	2
Low Temperature storage	Test the endurance of the display at low storage temperature.	-40°C , 240hrs	1,2
High Temperature Operation	Test the endurance of the display by applying electric stress (voltage & current) at high temperature.	+80°C 240hrs	2
Low Temperature Operation	Test the endurance of the display by applying electric stress (voltage & current) at low temperature.	-40°C , 240hrs	1,2
High Temperature / Humidity Storage	Test the endurance of the display by applying electric stress (voltage & current) at high temperature with high humidity.	+60°C , 90% RH , 240hrs	1,2
Thermal Shock resistance	Test the endurance of the display by applying electric stress (voltage & current) during a cycle of low and high temperatures.	-40°C,30min -> 25°C,5min -> 80°C,30min = 1 cycle 30 cycles	
Vibration test	Test the endurance of the display by applying vibration to simulate transportation and use.	10-55Hz, 1.5mm amplitude. 30min in each of 3 directions X,Y,Z	3
Static electricity test	Test the endurance of the display by applying electric static discharge.	Air: ±4kV, 10 Times	

Note 1: No condensation to be observed.
Note 2: Conducted after 2 hours of storage at 25°C, 0%RH.
Note 3: Test performed on product itself, not inside a container.
Evaluation Criteria:
1: Display is fully functional during operational tests and after all tests, at room temperature.
2: No observable defects.
3: Luminance >50% of initial value.
4: Current consumption within 50% of initial value

Downloaded from Arrow.com.