4611130000003

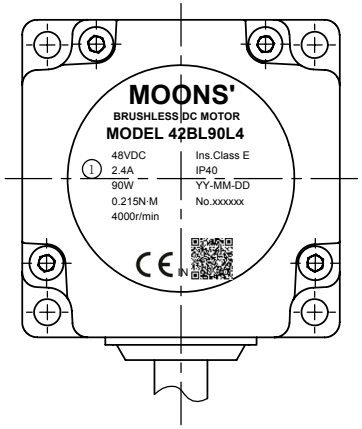

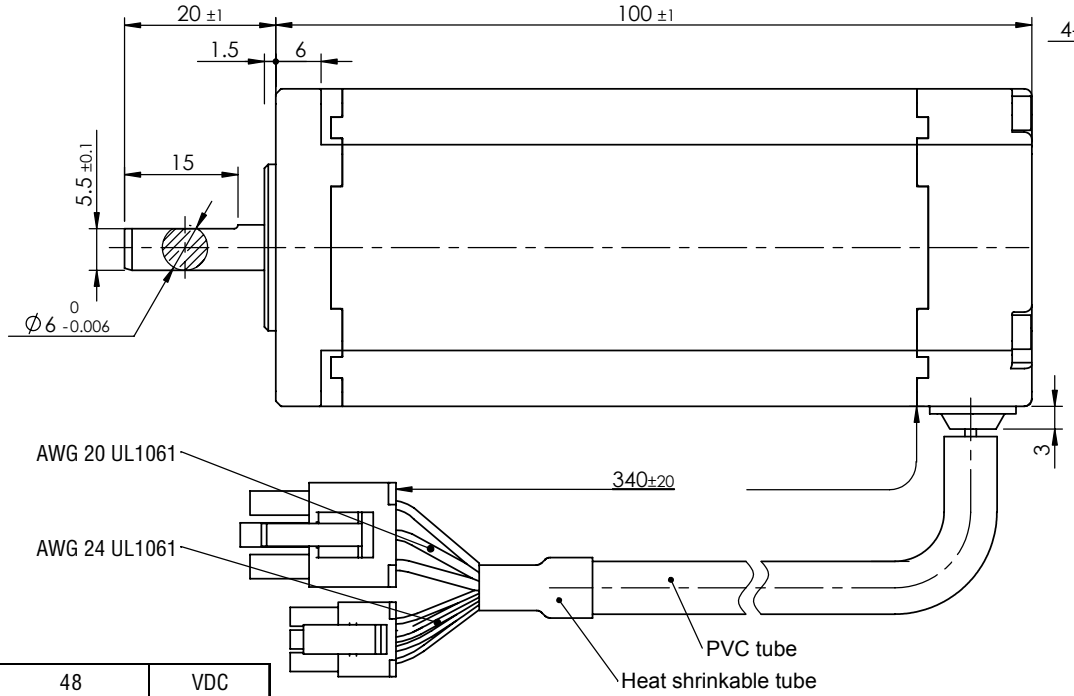

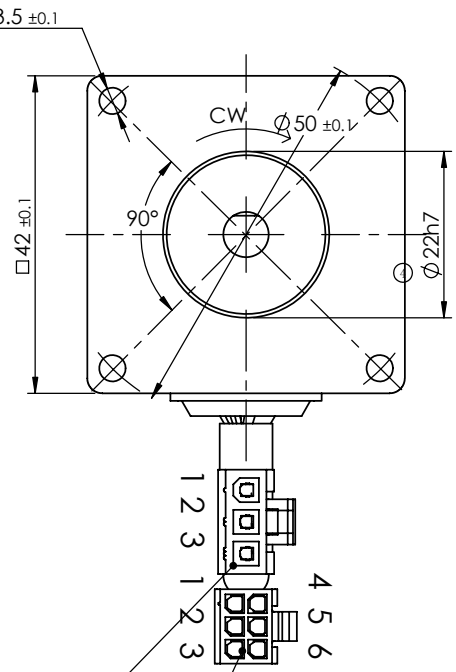

规格 Specifications ①

1	额定电压/Rated power supply	48	VDC
2	额定输出功率/Rated output power	90	W
3	极数/Poles number	6	
4	相数/Phase number	3	
5	额定转速/Rated rotational speed	4000	RPM
6	最大转速/Maximum speed	5000	RPM
7	额定转矩/Rated torque	0.215	N・m
8	额定电流/Rated winding current	2.40	A
9	线反电势系数/Voltage constant±10%	6.10	Vrms/krpm
10	惯量/Moment of inertia	0.114x10^-4	kg・m^2
11	线电阻Ph/ph resistance±10% at 20℃	1.47	Ω
12	线电感Ph/ph inductance±30% at 1KHz 20℃	1.57	mH
13	电机质量/Motor mass	0.83	kg
14	绝缘等级/Insulation class	E	120℃
15	防护等级/Protective enclosure rating	IP40	

转矩-转速特性 Torque-speed specifications

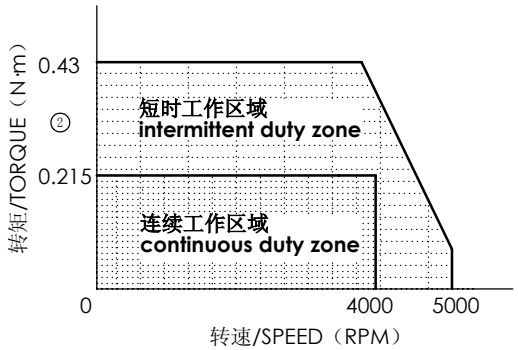

Housing:
MOLEX 39-01-4031 (Write)
Terminal:
MOLEX 39-00-0207

Pin No.	线色 COLOR	定义 FUNCTION
1	蓝/blue	W
2	橙/orange	U
3	黄/yellow	V

Housing:
MOLEX 43025-0600 (Black)
Terminal:
MOLEX 43030-0005

Pin No.	线色 COLOR	定义 FUNCTION
1	红/red	VCC(+5V)
3	黄/yellow	Hv
4	蓝/blue	Hw
5	黑/black	GND
6	橙/orange	Hu

REV.	版本记录 REVISION RECORD	DATE
G		
F		
E		
D		
C		
B	变更规格 Specification updated ①	2013-04-10
A	原始版本 Original revision	2012-05-28

Unit: mm
第一角画法
FIRST ANGLE METHOD
未注线性与角度尺寸公差
Tolerances for linear and angular dimensions without individual tolerance indications
GB/T 1804-m eqv ISO 2768-1：m
未注形状与位置尺寸公差
Geometrical tolerance for features without individual tolerance indications
GB/T 1184-K eqv ISO 2768-2：K

UNLESS OTHERWISE SPECIFIED

NAMES	SIGNATURE	DATE
批准 Approve		
标准化 Standard		
工艺 Technology		
审核 Check		
设计 Design	颜科	2013-04-10

MOONS'
Shanghai Moons' Electric Co., Ltd.

BRUSHLESS DC MOTOR

This document is released for information only. Its reproduction in whole or in part or its dissemination to third parties is prohibited. All trademarks and registered trademarks appearing on this document are the property of their respective owners.

Type: 42BL90L4 ③ | Rev. B | SCALE 1:1 | Sheet 1 of 1

Downloaded from Arrow.com.