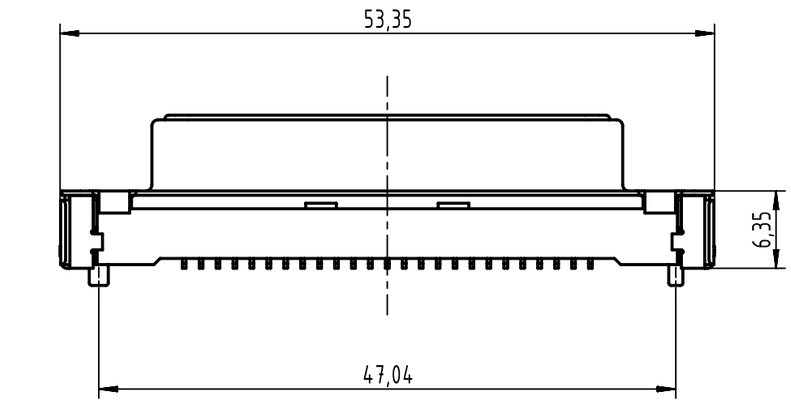

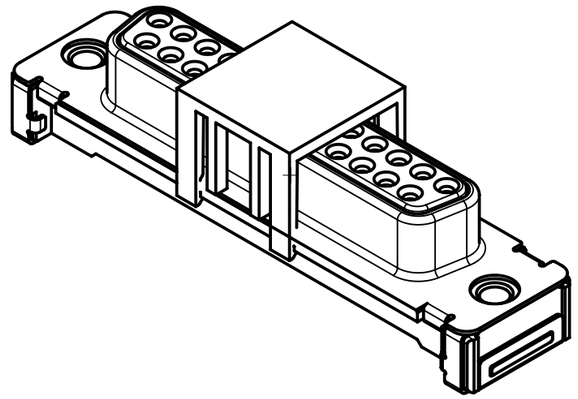

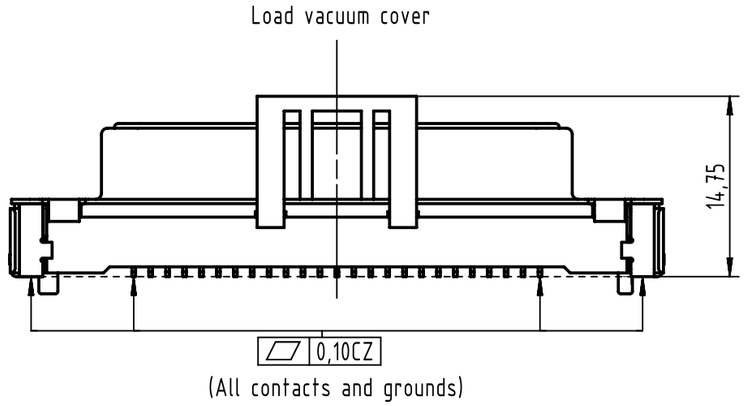

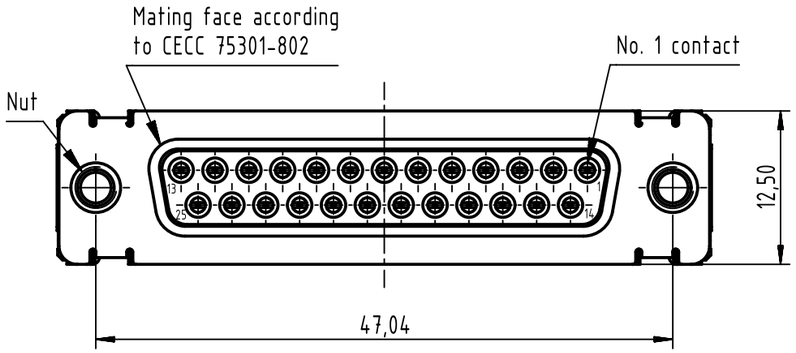

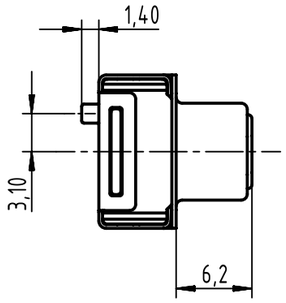

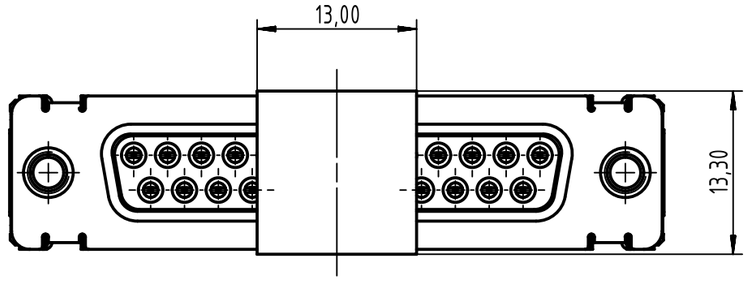

PCB layout, component side

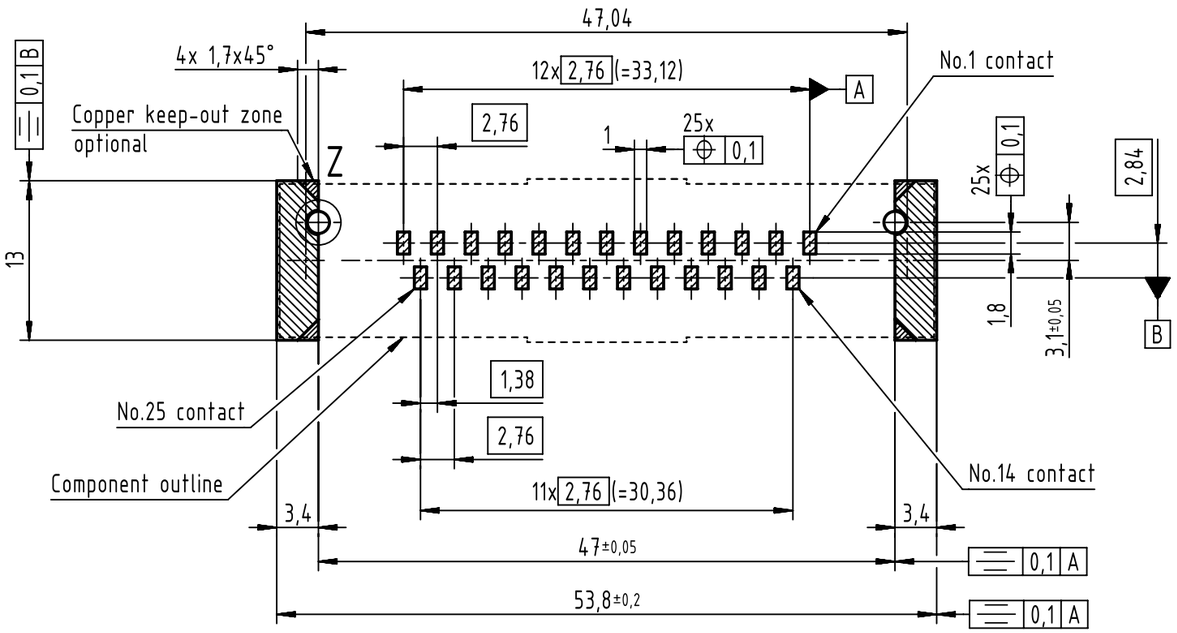

Z (5:1)

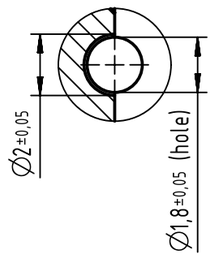

Max. Temperature: 260°C during 10 seconds.
Find further technical information on DS 09550200302.

Part number	PL	Nut	Index designation	
0955 315 6612 333	2	4-40 UNC	Black insulator	Samples
0955 315 3612 741	1			Reel packaging (140 connectors)
0955 315 6612 741	2			
0955 315 7612 741	3			
0955 315 3611 741	1	M3		
0955 315 6611 741	2			
0955 315 7611 741	3			

All Dimensions in mm
Original Size DIN A3

Scale 2:1 | Free size tol. | Ref. | Sub.

All rights reserved

Department EL PD

HARTING Electronics GmbH
D-32339 Espelkamp

Created by	Inspected by	Standardisation	Date	State
ZHUANGJ	LUOK	HOFFMANN	2018-11-29	Final Release

Title: D-Sub str SMT 25-pole fem ass with screw nut & pad

Doc-Key / ECM-Nr.: 100236623/UGD/001/D 500000139800

Type: TB | Number: 0955315X61X | Rev.: D | Page: 1/1

A3

Downloaded from Arrow.com.