SSD SATA 5000 2.5"

Datasheet

Preliminary, Rev 0.2

Document No. 80-11-01431

May 2007

SanDisk Corporation

Corporate Headquarters • 601 McCarthy Blvd. • Milpitas, CA 95035

Phone (408) 801-1000 • Fax (408) 801-8657

www.sandisk.com

Downloaded from Arrow.com.

Table of Contents

1. Introduction 4
   1.1 General Description 4
   1.2 Key Features 4
   1.3 Block Diagram 5
2. General Product Specifications 6
   2.1 Interface 6
   2.2 Capacity 6
   2.3 Performance 6
3. Power Characteristics 7
   3.1 Supply Voltage 7
   3.2 Power Consumption 7
   3.3 Power Consumption Efficiency 7
4. Physical Characteristics 8
   4.1 Mechanical 8
   4.2 Mounting Instructions 8
   4.3 Installation Orientation 8
5. Environmental Specifications 10
   5.1 Temperature 10
   5.2 Humidity 10
   5.3 Vibration 10
   5.4 Shock 10
   5.5 Altitude 11
   5.6 Acoustics 11
   5.7 Regulations 11
      5.7.1 EMC 11
      5.7.2 FCC 12
   5.8 RoHS 12
6. Reliability Characteristics 13
   6.1 Error Rate 13
   6.2 Product Life 13
   6.3 Mean Time to Failure 13
   6.4 Preventive Maintenance 13
7. Interface 14
   7.1 Supported Standards 14
   7.2 Interface Connector Characteristics 14
   7.3 Hotplug Support 14

Downloaded from Arrow.com.

7.4 SATA Bridge Support 14
7.5 Interface Connector Drawing 15
7.6 Pin Assignment 15
8. Supported ATA Commands 16
8.1 General Commands 16
8.2 Read Commands 19
8.3 Write Commands 24
8.4 Security Commands 27
8.5 Host Protected Area Commands (HPA) 29
8.6 Power Management Commands 31
9. Troubleshooting 33
9.1 Basic Checks 33
9.2 BIOS Setup 33
9.3 Slow Drive Performance 33
10. Ordering Information 34

Downloaded from Arrow.com.

1. Introduction

1.1 *General Description*

SanDisk SSD SATA 5000 2.5" is designed to drive the shift of mobile PC users from the hard disk drive to the solid state drive. A drop-in replacement for the hard disk drive, it delivers far superior durability, performance and power efficiency - keeping mobile PCs working optimally in the toughest of conditions.

SanDisk SSD SATA 5000 2.5" (SanDisk SSD), with 4, 8, 16, 32 and 64 gigabyte[1] (GB) flash memory, is targeted at enterprise users as the first step in mass consumer adoption of the solid state drive in the mobile PC market.

With no moving parts, SanDisk SSD does not need to spin up into action or to seek files in the way that conventional hard disk drives do - enabling SanDisk SSD to work much faster.

SanDisk, the industry leader in flash storage, is uniquely positioned to drive the paradigm shift in mobile computing to SSDs. Inside enterprise computers such as the thin & light laptop and transportable laptop, SanDisk SSD delivers unbeatable durability, system performance and power efficiency.

1.2 *Key Features*

- High capacity in small form factor
  - 2.5" small form factor supporting unformatted capacity of 4, 8, 16, 32, 64GB
  - 9.5mm case height
  - SATA 7+15 pins combo connector
- Interface to host
  - Standards: SATA 1.0a 1.5Gb/s
- High performance
  - Host transfer rate: 150MB/s
  - Internal transfer read rate: 67MB/s
  - Internal transfer write rate: 47MB/s
  - Random Read (4KB): 5400 IOPS
  - Average access time: 0.11msec
- Low power consumption
  - Supply voltage: 5Vdc
  - Typical read: 210mA
  - Typical write: 220mA

[1] 1 megabyte (MB) = 1 million bytes; 1 gigabyte (GB) = 1 billion bytes. Some of the listed capacity is used for formatting and other functions, and thus is not available for data storage.

Downloaded from Arrow.com.

- Typical idle: 90mA
- Typical standby: 70mA

- Highly reliable
  - Mean time to failure (MTTF): 2,000,000 hours, based on Part Stress Analysis
  - Operating shock: 1,500G, 0.5msec half sine
  - Operating vibration: 2.17G, 7-500 Hz
  - Operating temperature: 0°C to 70°C
  - Non-operating temperature and storage: -55°C to 95°C
  - Operating temperature: 0°C to 70°C
  - Non operating temperature and storage: -55°C to 95°C

1.3 *Block Diagram*

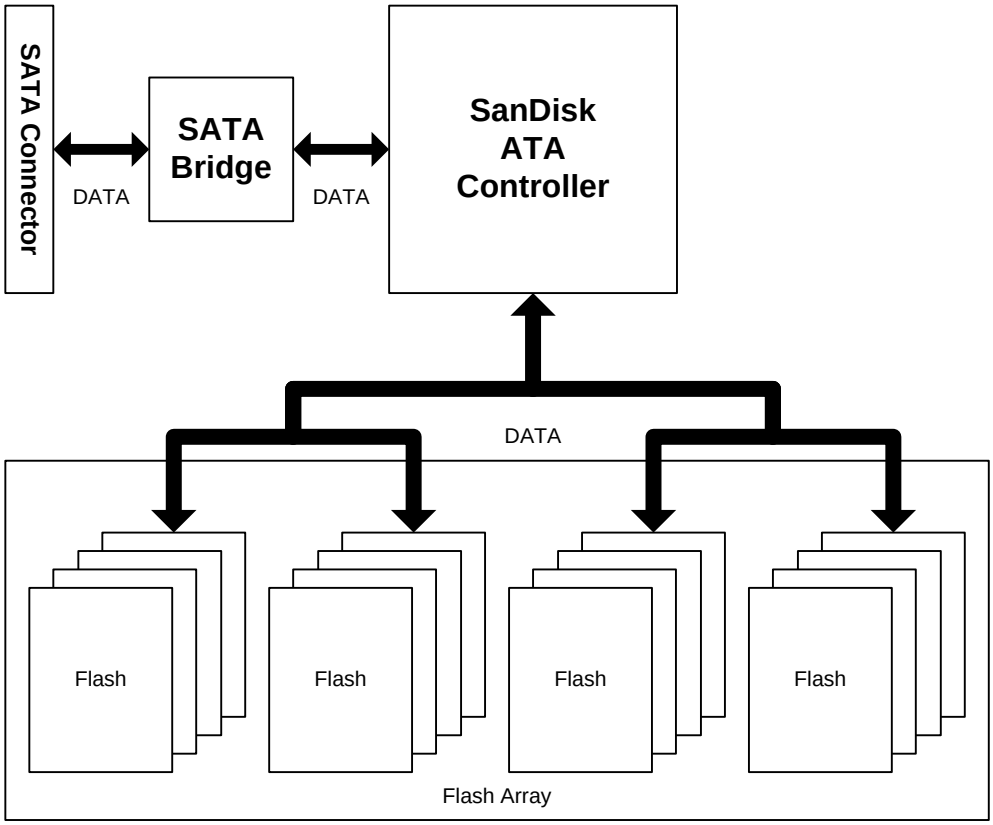

Figure 1: SanDisk SSD SATA 5000 2.5" Block Diagram

Downloaded from Arrow.com.

2. General Product Specifications

2.1 *Interface*

The SSD interface complies with the following standards:

- SATA 1.0a Gen1i (1.5Gb/s)
- ATA-2/ATA-3/ATA-4/ATA-5/ATA-6/ATA-7

The SSD supports Serial ATA 1.5Gbps (150MB/sec) interface rate.

2.2 *Capacity*

This datasheet refer to the 4, 8, 16, 32, 64GB version.

Table 1: SanDisk SSD SATA 5000 2.5" Capacity

Unformatted Capacity	Total Number of User-Addressable Sectors in LBA Mode	Number of Logical Cylinders	Number of Logical Heads	Number of Logical Sectors per Track
4GB	15,433,728	7,655	16	63
8GB	15,433,728	15,311	16	63
16GB	308,67,456	16,383	16	63
32GB	61,734,912	16,383	16	63
64GB	123,469,824[1]	16,383	16	63

1. Preliminary

2.3 *Performance*

Table 2: SanDisk SSD SATA 5000 2.5" Performance

Parameter	Specifications
Host transfer rate:	
Ultra DMA mode[1]	150MB/s
Internal transfer rate (maximum):	
Sequential Read[1,2]	67MB/s
Sequential Write[1,2]	47MB/s
Random Read[1,3]	67MB/s
Random Write[1,3]	7MB/s
IOPS:	
Random Read (512B)[1,3]	7430
Random Write (512B)[1,3]	15
Random Read (4KB)[1,3]	5400
Random Write (4KB)[1,3]	13
Average access time[1,2,4]	0.11 msec
Typical power-on ready time	2.3 sec

1. Tested in Ultra DMA 150MB/s
2. H2BENCH.c,v 3.6 2002/10/31, Windows 32-bit
3. IOMETER 2003.12.16
4. SSD does not have seek time or latency time

Downloaded from Arrow.com.

3. Power Characteristics

3.1 *Supply Voltage*

Table 3: SanDisk SSD SATA 5000 2.5" Supply Voltage

Parameter	Specifications
Input Voltage	5V ± 5%
Maximum Ripple	100mV (peak to peak), 0 – 30MHz
Supply Rise Time	7 msec to 100 msec
Maximum Supply Fall Time	5 sec

3.2 *Power Consumption*

Table 4: SanDisk SSD SATA 5000 2.5" Power Consumption

Parameter	Specifications (W)
Maximum	1.10
Read (Typical)	1.04
Write (Typical)	1.08
Active Idle (Typical)	0.51
Idle (Typical)	0.45
Standby (Typical)	0.34
Sleep (Typical)	0.31

3.3 *Power Consumption Efficiency*

Table 5: SanDisk SSD SATA 5000 2.5" Power Consumption Efficiency (Watts/GB)[1]

Capacity (GB)	Specifications (W)
4	0.1125
8	0.0562
16	0.0281
32	0.0140
64	0.0070[2]

1. Power consumption efficiency is calculated as Power Consumption Idle (watts)/Capacity (GB)
2. Preliminary

Downloaded from Arrow.com.

4. Physical Characteristics

4.1 *Mechanical*

Table 6: SanDisk SSD SATA 5000 2.5" Mechanical Dimensions and Weight

Parameter	Specifications
Width	69.85 ± 0.25 mm
Height	9.5 ± 0.2 mm
Length	102.0 ± 0.25 mm
Maximum Weight	96 gr

4.2 *Mounting Instructions*

Before unpacking and installing the drive, take anti-static measures in order to avoid damage to the drive. The drive may be exposed to potential handling and electrostatic discharge (ESD) hazards. The following guidelines are recommended.

- Keep the drive in ESD bag until the drive is ready to be installed.
- Wear an ESD-proof wrist strap before handling the drive.
- Avoid touching the drive's connector. Handle the drive using its edge or frame.
- Rest the drive on an antistatic surface until mounting it.
- Handle the drive carefully, taking care not to drop or bang it against other objects.
- Do not remove, damage or cover any product labels. Removal of such labels voids the warranty.
- The ambient temperature at the top cover should not exceed the maximum operating temperature of the drive.
- Exercise caution when removing the drive from the host as the drive may have heated up.
- The recommended mounting screw torque is 0.675Nm.
- The recommended mounting screw depth is 4.0mm (0.157in) for bottom for horizontal mounting.

4.3 *Installation Orientation*

The SSD can be installed in all axes (6 directions). For a mechanical drawing, see Figure 2.

Downloaded from Arrow.com.

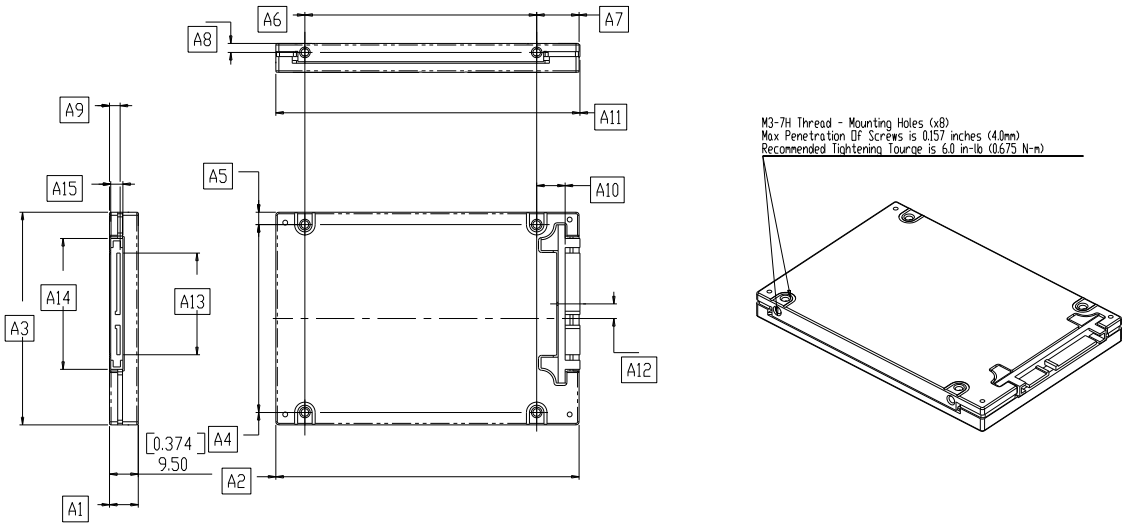

Dimention	Milimeters	Inches
A1	9.50 ± 0.20	0.374 ± 0.008
A2	100.2 ± 0.25	3.945 ± 0.010
A3	69.85 ± 0.25	2.750 ± 0.010
A4	61.72 ± 0.25	2.430 ± 0.010
A5	4.07 ± 0.25	0.160 ± 0.010
A6	76.60 ± 0.25	3.016 ± 0.010
A7	14.00 ± 0.25	0.551 ± 0.010
A8	3.00 ± 0.25	0.118 ± 0.010
A9	3.50 ± 0.38	0.138 ± 0.015
A10	9.40 ± 0.25	0.370 ± 0.010
A11	100.50 ± 0.25	3.957 ± 0.010
A12	4.80 ± 0.25	0.189 ± 0.010
A13	33.39 ± 0.10	1.315 ± 0.004
A14	42.73 REF	1.682 REF
A15	4.00 REF	0.157 REF

Figure 2: SanDisk SSD SATA 5000 2.5" Mechanical Drawing

Downloaded from Arrow.com.

5. Environmental Specifications

5.1 *Temperature*

Table 7: SanDisk SSD SATA 5000 2.5" Temperature Support

Parameter	Specifications
Operating	0°C to 70°C
Non-operating	-55°C to 95°C
Storage	-55°C to 95°C
Maximum temperature gradient	30°C per hour

5.2 *Humidity*

Table 8: SanDisk SSD SATA 5000 2.5" Humidity Support

Parameter	Specifications
Operating	
Humidity (Non condensation)	5% to 95%
Maximum web bulb	29°C
Non-operating	
Humidity (Non condensation)	5% to 95%
Maximum web bulb	38°C
Maximum relative humidity gradient	20% per hour

5.3 *Vibration*

Table 9: SanDisk SSD SATA 5000 2.5" Vibration Support

Parameter	Specifications
Operating	2.17G, 7 – 800Hz
Non-operating	3.0G, 5 – 500Hz

5.4 *Shock*

Table 10: SanDisk SSD SATA 5000 2.5" Shock Support

Parameter	Acceleration Force (G)	Half-sine Pulse Duration (msec)
Operating	500	2
	1,000	1
	1,000	0.5
Non-operating	200	10
	1,500	1
	1,500	0.5

Downloaded from Arrow.com.

5.5 *Altitude*

Table 11: SanDisk SSD SATA 5000 2.5" Altitude Support

Parameter	Specifications
Operating	-400m to 24,384m (-1,312ft. to 80,000ft.)
Non-operating	-400m to 24,384m (-1,312ft. to 80,000ft.)

5.6 *Acoustics*

The SSD does not generate any acoustics noise (0dB).

5.7 *Regulations*

The SSD is certified with the following standards.

Table 12: SanDisk SSD SATA 5000 2.5" Regulation Standards

Standard	Details
Underwriters Laboratories (UL)	UL 60950-1
UL Canadian (ULc)	CAN/CSA C22.2 No. 60950-1-03 (UL 60950)
Technischer Überwachungsverein (TÜV)	EN 60950:2000
Ministry of Information and Communication (MIC)	CISPR Pub. 22 Class B
Bureau of Standards, Metrology and Inspection (BSMI)	CNS 13438:2006, Class B
Australian Communications Authority (ACA)	AS/NZS CISPR 22:2002, Class B
Voluntary Control Council for Interference by Information Technology Equipment (VCCI)	R-1113 and C-1172, Class B[1]

1. This is a Class B product based on the standard of the Voluntary Control Council for Interference by Information Technology Equipment (VCCI). If this equipment is used in a domestic environment, it may cause radio interference. Install and use the equipment according to the instruction manual.

5.7.1 *EMC*

Directive 73/23/ECC for product safety

Directive 89/336/EEC:

Table 13: SanDisk SSD SATA 5000 2.5" Electromagnetic Compatibility Support

Parameter	Standard
Emission	EN55022:1998, A1:2000,A2:2003
	IEC 61000-3-3
Immunity	EN55024:1998, A1:2001, A2:2003
	IEC 61000-4-2
	IEC 61000-4-3
	IEC 61000-4-4
	IEC 61000-4-5

Downloaded from Arrow.com.

	IEC 61000-4-6
	IEC 61000-4-8
	IEC 61000-4-11

5.7.2 *FCC*

FCC 47CFR part 15 subpart B class B.

5.8 *RoHS*

Directive of the European Parliament and of the Council on the Restriction of the Use of Certain Hazardous Substances in Electrical and Electronic Equipment, 2002/95/EC, January 2003. (RoHS Directive).

Downloaded from Arrow.com.

6. Reliability Characteristics

6.1 *Error Rate*

Non-recoverable error rate is 1 error per 10^{14} bits read.

6.2 *Product Life*

The product life is at least 5 years or 43,800 power-on hours, whichever comes earlier under the following conditions:

- Power-on hours = 8,760 per year
- Operating time = 100% of power-on hours
- Active/Idle duty cycle = 90% of the time
- Environmental = temperature, altitude, humidity and voltage within operating ranges
- The drive should be protected from electrostatic discharge (ESD)
    - The product life does not represent any warranty or warranty period. Applicable warranty and warranty period are covered by the purchasing agreement.

Note: Product life is defined as time in service at systems conditions while maintaining compliance to the MTTF specification for the device.

6.3 *Mean Time to Failure*

Mean time to failure (MTTF) is calculated based on part stress analysis.

The following conditions are set for calculation:

- Power-on hours = 8,760 per year
- Operating time = 100% of power-on hours
- Ambient temperature = 25°C

Table 14: SanDisk SSD SATA 5000 2.5" MTTF

Capacity (GB)	MTTF (hours)
4, 8, 16, 32, 64	2,000,000

6.4 *Preventive Maintenance*

No preventive maintenance is required.

Downloaded from Arrow.com.

7. Interface

7.1 *Supported Standards*

The SSD complies with the following standards:

- ATA-2: ANSI X3.279-1996, AT Attachment Interface with Extensions.
- ATA-3: ANSI INCITS 298-1997, AT Attachment Interface-3.
- ATA/ATAPI-4: ANSI INCITS 317-1998, AT Attachment with Packet Interface-4.
- ATA/ATAPI-5: ANSI INCITS 340-2000, AT Attachment with Packet Interface-5.
- ATA/ATAPI-6: ANSI INCITS 361-2002, AT Attachment with Packet Interface-6.
- ATA/ATAPI-7: ANSI INCITS 397-2005, AT Attachment with Packet Interface-7.
- Serial ATA Revision 2.5 Specification (Ratification Date: October 27, 2005).

7.2 *Interface Connector Characteristics*

Table 15: SanDisk SSD SATA 5000 2.5" Connector Characteristics

Parameter	Specifications
Drive Connector	FCI, 10039651-001LF
Mating/Unmating force	The force to mate a receptacle connector and compatible plug connector should not exceed 45N (4.6kgf) The unmating force should not be less than 10N (1.0kgf)
Durability	5,000 cycles

7.3 *Hotplug Support*

The SSD supports hotplug operation per SATA 2.5 specification.

7.4 *SATA Bridge Support*

The SSD supports Marvell's Serial ATA bridge (P/N: 88SA8040).

Downloaded from Arrow.com.

7.5 *Interface Connector Drawing*

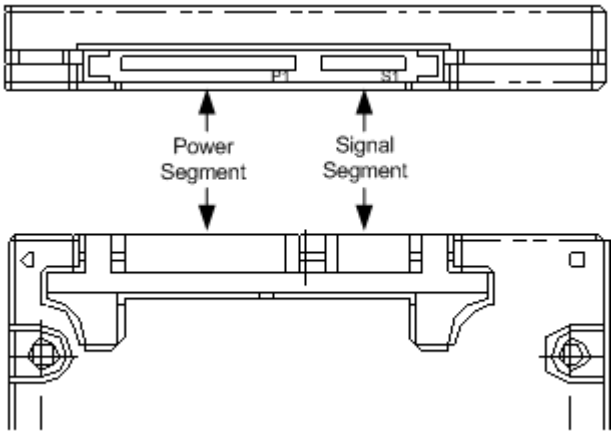

Figure 3: Interface Connector View

7.6 *Pin Assignment*

Table 16: SanDisk SSD SATA 5000 2.5" Pin Assignment

	Pin	Function	Description
Signal Segment	S1	Ground	2nd mate
	S2	A+	Differential Signal Pair A
	S3	A-	
	S4	Ground	2nd mate
	S5	B-	Differential Signal Pair A
	S6	B+	
	S7	Ground	2nd mate
Power Segment	P1	V_{33}	3.3V Power
	P2	V_{33}	3.3V Power
	P3	V_{33}	3.3V Power, Pre-charge, 2nd Mate
	P4	Ground	1st Mate
	P5	Ground	2nd Mate
	P6	Ground	2nd Mate
	P7	V_5	5V Power, Pre-charge, 2nd Mate
	P8	V_5	5V Power
	P9	V_5	5V Power
	P10	Ground	2nd Mate
	P11	DAS	Device Activity Signal The corresponding pin to be mated with P11 in the power cable receptacle connector shall always be grounded.
	P12	Ground	1st Mate
	P13	V_{12}	12V Power, Pre-charge, 2nd Mate
	P14	V_{12}	12V Power
	P15	V_{12}	12V Power

1. All pins are in a single row, with a 1.27 mm (0.050") pitch.

Downloaded from Arrow.com.

8. Supported ATA Commands

8.1 *General Commands*

Download Microcode

Register	7	6	5	4	3	2	1	0
Features	Subcommand							
Sector Count	Sector Count (Low)							
Sector Number	Sector Count (High)							
Cylinder Low	00h							
Cylinder High	00h							
Device/Head	obs	N/A	obs	DEV	0			
Command	92h							

Subcommand:

0x01 – Download is for immediate, temporary use, i.e. into device RAM

0x07 – Save downloaded code for immediate & future use, i.e. into flash.

Execute Device Diagnostic

Register	7	6	5	4	3	2	1	0
Features	N/A							
Sector Count	N/A							
Sector Number	N/A							
Cylinder Low	N/A							
Cylinder High	N/A							
Device/Head	obs	N/A	obs	DEV	N/A			
Command	90h							

Flush Cache

Register	7	6	5	4	3	2	1	0
Features	N/A							
Sector Count	N/A							
Sector Number	N/A							
Cylinder Low	N/A							
Cylinder High	N/A							
Device/Head	obs	N/A	obs	DEV	N/A			
Command	E7h							

There is no need to flush cache, unless it was previously enabled by the SET FEATURES command.

Downloaded from Arrow.com.

Flush Cache Ext

Register		7	6	5	4	3	2	1	0
Features	Current	Reserved							
	Previous	Reserved							
Sector Count	Current	Reserved							
	Previous	Reserved							
Sector Number	Current	Reserved							
	Previous	Reserved							
Cylinder Low	Current	Reserved							
	Previous	Reserved							
Cylinder High	Current	Reserved							
	Previous	Reserved							
Device/Head		obs	N/A	obs	DEV	N/A			
Command		EAh							
NOTE: "Current" is the value most recently written to the register. "Previous" is the value that was in the register before the most recent write to the register.									

Identify Device

Register	7	6	5	4	3	2	1	0
Features	N/A							
Sector Count	N/A							
Sector Number	N/A							
Cylinder Low	N/A							
Cylinder High	N/A							
Device/Head	obs	N/A	obs	DEV	N/A			
Command	ECh							

Identify Device DMA

Register	7	6	5	4	3	2	1	0
Features	N/A							
Sector Count	N/A							
Sector Number	N/A							
Cylinder Low	N/A							
Cylinder High	N/A							
Device/Head	obs	N/A	obs	DEV	N/A			
Command	EEh							

Downloaded from Arrow.com.

Device Configuration

Register	7	6	5	4	3	2	1	0
Features	Subcommand							
Sector Count	N/A							
Sector Number	N/A							
Cylinder Low	N/A							
Cylinder High	N/A							
Device/Head	N/A			DEV	N/A			
Command	81h							

The following subcommands are supported:

Command Code	Command Name
C0h	Device Configuration Restore
C1h	Device Configuration Freeze Lock
C2h	Device Configuration Identify
C3h	Device Configuration Set

Initialize Device Parameters

Register	7	6	5	4	3	2	1	0
Features	N/A							
Sector Count	Logical Sectors per track							
Sector Number	N/A							
Cylinder Low	N/A							
Cylinder High	N/A							
Device/Head	obs	N/A	obs	DEV	Max head			
Command	91h							

NOP

Register	7	6	5	4	3	2	1	0
Features	Subcommand code							
Sector Count	N/A							
Sector Number	N/A							
Cylinder Low	N/A							
Cylinder High	N/A							
Device/Head	obs	N/A	obs	DEV	N/A			
Command	00h							

Downloaded from Arrow.com.

8.2 *Read Commands*

Read Buffer

Register	7	6	5	4	3	2	1	0
Features	N/A							
Sector Count	N/A							
Sector Number	N/A							
Cylinder Low	N/A							
Cylinder High	N/A							
Device/Head	obs	N/A	obs	DEV	N/A			
Command	E4h							

Enables the host to read the current contents of the device's sector buffer.

The Read Buffer and Write Buffer commands are synchronized such that sequential Write Buffer and Read Buffer commands access the same 512 bytes within the buffer.

Read DMA

Register	7	6	5	4	3	2	1	0
Features	N/A							
Sector Count	Sector Count							
Sector Number	Sector Number or LBA (7:0)							
Cylinder Low	Cylinder Low or LBA (15:8)							
Cylinder High	Cylinder High or LBA (23:16)							
Device/Head	obs	LBA	obs	DEV	Head number or LBA (27:24)			
Command	C8h or C9h							

Read DMA Ext

Register		7	6	5	4	3	2	1	0
Features	Current	Reserved							
	Previous	Reserved							
Sector Count	Current	Sector Count (7:0)							
	Previous	Sector Count (15:8)							
Sector Number	Current	Sector Number or LBA (7:0)							
	Previous	Sector Number or LBA (31:24)							
Cylinder Low	Current	Cylinder Low or LBA (15:8)							
	Previous	Cylinder Low or LBA (39:32)							
Cylinder High	Current	Cylinder High or LBA (23:16)							
	Previous	Cylinder High or LBA (47:40)							
Device/Head		obs	LBA	obs	DEV	Reserved			
Command		25h							
NOTE: The value indicated as Current is the value most recently written to the register. The value indicated as Previous is the value that was in the register before the most recent write to the register.									

Downloaded from Arrow.com.

Read Multiple

Register	7	6	5	4	3	2	1	0
Features	N/A							
Sector Count	Sector Count							
Sector Number	Sector Number or LBA (7:0)							
Cylinder Low	Cylinder Low or LBA (15:8)							
Cylinder High	Cylinder High or LBA (23:16)							
Device/Head	obs	LBA	obs	DEV	Head number or LBA (27:24)			
Command	C4h							

Similar to READ SECTORS, as E3 supports only multiples of 1 (can burst more than one sector).

Read Multiple_Ext

Register		7	6	5	4	3	2	1	0
Features	Current Previous	Reserved Reserved							
Sector Count	Current Previous	Sector Count (7:0) Sector Count (15:8)							
Sector Number	Current Previous	Sector Number or LBA (7:0) Sector Number or LBA (31:24)							
Cylinder Low	Current Previous	Cylinder Low or LBA (15:8) Cylinder Low or LBA (39:32)							
Cylinder High	Current Previous	Cylinder High or LBA (23:16) Cylinder High or LBA (47:40)							
Device/Head		Obs	LBA	obs	DEV	Reserved			
Command		29h							
NOTE: "Current" is the value most recently written to the register. "Previous" is the value that was in the register before the most recent write to the register.									

Read Sectors

Register	7	6	5	4	3	2	1	0
Features	N/A							
Sector Count	Sector Count							
Sector Number	Sector Number or LBA (7:0)							
Cylinder Low	Cylinder Low or LBA (15:8)							
Cylinder High	Cylinder High or LBA (23:16)							
Device/Head	obs	LBA	obs	DEV	Head number or LBA (27:24)			
Command	20h or 21h							

Downloaded from Arrow.com.

Read Sectors Ext

Register		7	6	5	4	3	2	1	0
Features	Current Previous	Reserved Reserved							
Sector Count	Current Previous	Sector Count (7:0) Sector Count (15:8)							
Sector Number	Current Previous	Sector Number or LBA (7:0) Sector Number or LBA (31:24)							
Cylinder Low	Current Previous	Cylinder Low or LBA (15:8) Cylinder Low or LBA (39:32)							
Cylinder High	Current Previous	Cylinder High or LBA (23:16) Cylinder High or LBA (47:40)							
Device/Head		Obs	LBA	obs	DEV	Reserved			
Command		24h							
NOTE: "Current" is the value most recently written to the register. "Previous" is the value that was in the register before the most recent write to the register.									

Read Verify Sectors

Register	7	6	5	4	3	2	1	0
Features	N/A							
Sector Count	Sector Count							
Sector Number	Sector Number or LBA (7:0)							
Cylinder Low	Cylinder Low or LBA (15:8)							
Cylinder High	Cylinder High or LBA (23:16)							
Device/Head	obs	LBA	obs	DEV	Head number or LBA (27:24)			
Command	40h or 41h							

Similar to Read, except that no data is transferred to the host.

Read Verify Sectors Ext

Register		7	6	5	4	3	2	1	0
Features	Current Previous	Reserved Reserved							
Sector Count	Current Previous	Sector Count (7:0) Sector Count (15:8)							
Sector Number	Current Previous	Sector Number or LBA (7:0) Sector Number or LBA (31:24)							
Cylinder Low	Current Previous	Cylinder Low or LBA (15:8) Cylinder Low or LBA (39:32)							
Cylinder High	Current Previous	Cylinder High or LBA (23:16) Cylinder High or LBA (47:40)							
Device/Head		Obs	LBA	obs	DEV	Reserved			
Command		42h							
NOTE: "Current" is the value most recently written to the register. "Previous" is the value that was in the register before the most recent write to the register.									

Downloaded from Arrow.com.

Recalibrate

Register	7	6	5	4	3	2	1	0
Features	N/A							
Sector Count	N/A							
Sector Number	N/A							
Cylinder Low	N/A							
Cylinder High	N/A							
Device/Head	obs	LBA	obs	DEV	N/A			
Command	10h							

Seek

Register	7	6	5	4	3	2	1	0
Features	N/A							
Sector Count	N/A							
Sector Number	Sector Number or LBA (7:0)							
Cylinder Low	Cylinder Low or LBA (15:8)							
Cylinder High	Cylinder High or LBA (23:16)							
Device/Head	obs	LBA	obs	DEV	Head number or LBA (27:24)			
Command	70h							

Set Features

Register	7	6	5	4	3	2	1	0
Features	Subcommand							
Sector Count	Subcommand specific							
Sector Number	Subcommand specific							
Cylinder Low	Subcommand specific							
Cylinder High	Subcommand specific							
Device/Head	obs	N/A	obs	DEV	N/A			
Command	EFh							

The following subcommands are supported:

Command Code	Command Name
02h	Enable write cache
03h	Set transfer mode
05h	Enable Advanced Power Management
10h	Enable SATA Feature
42h	Enable automatic acoustic management
55h	Disable look-ahead
66h	Disable reverting to power-on defaults
82h	Disable write cache
85h	Disable Advanced Power Management
90h	Disable SATA Feature
AAh	Enable look-ahead
C2h	Disable automatic acoustic management
CCh	Enable reverting to power-on defaults

Downloaded from Arrow.com.

S.M.A.R.T Command

Register	7	6	5	4	3	2	1	0
Features	N/A							
Sector Count	Sectors per block							
Sector Number	N/A							
Cylinder Low	N/A							
Cylinder High	N/A							
Device/Head	obs	N/A	Obs	DEV	N/A			
Command	C6h							

The following subcommands are supported:

Command Code	Command Name
D0h	Smart Read Data
D1h	Read Attribute Thresholds
D2h	Enable Disable Attribute Autosave
D3h	Save Attribute Values
D4h	Execute Offline Immediate
D5h	Smart Read Log
D6h	Smart Write Log
D8h	Smart Enable Operations
D9h	Smart Disable Operations
DAh	Smart Return Status
DBh	Disable Automatic Offline

Set Multiple Mode

Register	7	6	5	4	3	2	1	0
Features	N/A							
Sector Count	Sectors per block							
Sector Number	N/A							
Cylinder Low	N/A							
Cylinder High	N/A							
Device/Head	obs	N/A	obs	DEV	N/A			
Command	C6h							

Establish the block count for READ MULTIPLE, WRITE MULTIPLE commands.

Downloaded from Arrow.com.

8.3 *Write Commands*

Write Buffer

Register	7	6	5	4	3	2	1	0
Features	N/A							
Sector Count	N/A							
Sector Number	N/A							
Cylinder Low	N/A							
Cylinder High	N/A							
Device/Head	obs	N/A	obs	DEV	N/A			
Command	E8h							

Enable the host to write the contents of one sector in the device's buffer.

The READ BUFFER and WRITE BUFFER commands are synchronized such that sequential WRITE BUFFER and READ BUFFER commands access the same 512 bytes within the buffer.

Write DMA

Register	7	6	5	4	3	2	1	0
Features	N/A							
Sector Count	Sector Count							
Sector Number	Sector Number or LBA (7:0)							
Cylinder Low	Cylinder Low or LBA (15:8)							
Cylinder High	Cylinder High or LBA (23:16)							
Device/Head	obs	LBA	obs	DEV	Head number or LBA (27:24)			
Command	CAh or CBh							

Write DMA Ext

Register		7	6	5	4	3	2	1	0
Features	Current	Reserved							
	Previous	Reserved							
Sector Count	Current	Sector Count (7:0)							
	Previous	Sector Count (15:8)							
Sector Number	Current	Sector Number or LBA (7:0)							
	Previous	Sector Number or LBA (31:24)							
Cylinder Low	Current	Cylinder Low or LBA (15:8)							
	Previous	Cylinder Low or LBA (39:32)							
Cylinder High	Current	Cylinder High or LBA (23:16)							
	Previous	Cylinder High or LBA (47:40)							
Device/Head		Obs	LBA	obs	DEV	Reserved			
Command		35h							
NOTE: "Current" is the value most recently written to the register. "Previous" is the value that was in the register before the most recent write to the register.									

Downloaded from Arrow.com.

Write Multiple

Register	7	6	5	4	3	2	1	0
Features	N/A							
Sector Count	Sector Count							
Sector Number	Sector Number or LBA (7:0)							
Cylinder Low	Cylinder Low or LBA (15:8)							
Cylinder High	Cylinder High or LBA (23:16)							
Device/Head	obs	LBA	obs	DEV	Head number or LBA (27:24)			
Command	C5h							

Similar to WRITE SECTORS except the basic transfer (after which device sets BSY and host should wait for interrupt) is not 1 sector, but is configurable by SET MULTIPLE command.

Write Multiple Ext

Register		7	6	5	4	3	2	1	0
Features	Current Previous	Reserved Reserved							
Sector Count	Current Previous	Sector Count (7:0) Sector Count (15:8)							
Sector Number	Current Previous	Sector Number or LBA (7:0) Sector Number or LBA (31:24)							
Cylinder Low	Current Previous	Cylinder Low or LBA (15:8) Cylinder Low or LBA (39:32)							
Cylinder High	Current Previous	Cylinder High or LBA (23:16) Cylinder High or LBA (47:40)							
Device/Head		Obs	LBA	obs	DEV	Reserved			
Command		39h							
NOTE: "Current" is the value most recently written to the register. "Previous" is the value that was in the register before the most recent write to the register.									

Write Sectors

Register	7	6	5	4	3	2	1	0
Features	N/A							
Sector Count	Sector Count							
Sector Number	Sector Number or LBA (7:0)							
Cylinder Low	Cylinder Low or LBA (15:8)							
Cylinder High	Cylinder High or LBA (23:16)							
Device/Head	obs	LBA	obs	DEV	Head number or LBA (27:24)			
Command	30h or 31h							

Downloaded from Arrow.com.

Write Sectors Ext

Register		7	6	5	4	3	2	1	0
Features	Current Previous	Reserved Reserved							
Sector Count	Current Previous	Sector Count (7:0) Sector Count (15:8)							
Sector Number	Current Previous	Sector Number or LBA (7:0) Sector Number or LBA (31:24)							
Cylinder Low	Current Previous	Cylinder Low or LBA (15:8) Cylinder Low or LBA (39:32)							
Cylinder High	Current Previous	Cylinder High or LBA (23:16) Cylinder High or LBA (47:40)							
Device/Head		Obs	LBA	obs	DEV	Reserved			
Command		34h							
NOTE: "Current" is the value most recently written to the register. "Previous" is the value that was in the register before the most recent write to the register.									

Write Verify

Register	7	6	5	4	3	2	1	0
Features	N/A							
Sector Count	Sector Count							
Sector Number	Sector Number or LBA (7:0)							
Cylinder Low	Cylinder Low or LBA (15:8)							
Cylinder High	Cylinder High or LBA (23:16)							
Device/Head	obs	LBA	obs	DEV	Head number or LBA (27:24)			
Command	3Ch							

Downloaded from Arrow.com.

8.4 *Security Commands*

Security Disable Password

Register	7	6	5	4	3	2	1	0
Features	N/A							
Sector Count	N/A							
Sector Number	N/A							
Cylinder Low	N/A							
Cylinder High	N/A							
Device/Head	obs	N/A	obs	DEV	N/A			
Command	F6h							

Security Erase Prepare

Register	7	6	5	4	3	2	1	0
Features	N/A							
Sector Count	N/A							
Sector Number	N/A							
Cylinder Low	N/A							
Cylinder High	N/A							
Device/Head	obs	N/A	obs	DEV	N/A			
Command	F3h							

Security Erase Unit

Register	7	6	5	4	3	2	1	0
Features	N/A							
Sector Count	N/A							
Sector Number	N/A							
Cylinder Low	N/A							
Cylinder High	N/A							
Device/Head	obs	N/A	obs	DEV	N/A			
Command	F4h							

Security Freeze Lock

Register	7	6	5	4	3	2	1	0
Features	N/A							
Sector Count	N/A							
Sector Number	N/A							
Cylinder Low	N/A							
Cylinder High	N/A							
Device/Head	obs	N/A	obs	DEV	N/A			
Command	F5h							

Downloaded from Arrow.com.

Security Set Password

Register	7	6	5	4	3	2	1	0
Features	N/A							
Sector Count	N/A							
Sector Number	N/A							
Cylinder Low	N/A							
Cylinder High	N/A							
Device/Head	obs	N/A	obs	DEV	N/A			
Command	F1h							

Security Unlock

Register	7	6	5	4	3	2	1	0
Features	N/A							
Sector Count	N/A							
Sector Number	N/A							
Cylinder Low	N/A							
Cylinder High	N/A							
Device/Head	obs	N/A	obs	DEV	N/A			
Command	F2h							

Downloaded from Arrow.com.

8.5 *Host Protected Area Commands (HPA)*

Read Native Max Address

Register	7	6	5	4	3	2	1	0
Features	N/A							
Sector Count	N/A							
Sector Number	N/A							
Cylinder Low	N/A							
Cylinder High	N/A							
Device/Head	obs	LBA	obs	DEV	N/A			
Command	F8h							

Read Native Max Address Ext

Register		7	6	5	4	3	2	1	0
Features	Current Previous	Reserved Reserved							
Sector Count	Current Previous	Reserved Reserved							
Sector Number	Current Previous	Reserved Reserved							
Cylinder Low	Current Previous	Reserved Reserved							
Cylinder High	Current Previous	Reserved Reserved							
Device/Head		Obs	LBA	obs	DEV	N/A			
Command		27h							
NOTE: "Current" is the value most recently written to the register. "Previous" is the value that was in the register before the most recent write to the register.									

Set Max Address

Register	7	6	5	4	3	2	1	0
Features	N/A							
Sector Count	N/A							V V
Sector Number	SET MAX LBA (7:0)							
Cylinder Low	SET MAX LBA (15:8)							
Cylinder High	SET MAX LBA (23:16)							
Device/Head	obs	LBA	obs	DEV	SET MAX LBA (27:24)			
Command	F9h							

Downloaded from Arrow.com.

Set Max Address Ext

Register		7	6	5	4	3	2	1	0
Features	Current Previous	Reserved Reserved							
Sector Count	Current Previous	Reserved							V V
Sector Number	Current Previous	SET MAX LBA (7:0) SET MAX LBA (31:24)							
Cylinder Low	Current Previous	SET MAX LBA (15:8) SET MAX LBA (39:32)							
Cylinder High	Current Previous	SET MAX LBA (23:16) SET MAX LBA (47:40)							
Device/Head		obs	LBA	obs	DEV	N/A			
Command		37h							
NOTE: "Current" is the value most recently written to the register. "Previous" is the value that was in the register before the most recent write to the register.									

Downloaded from Arrow.com.

8.6 *Power Management Commands*

Check Power Mode

Register	7	6	5	4	3	2	1	0
Features	N/A							
Sector Count	N/A							
Sector Number	N/A							
Cylinder Low	N/A							
Cylinder High	N/A							
Device/Head	obs	N/A	obs	DEV	N/A			
Command	98h or E5h							

Returns current mode in Sector Count register:

00 – device is in Standby Mode

0x80 – device is in Idle Mode

0xFF – device is in Active Mode.

If responding to command removed the device from power-saving mode, on completion of the command the device will return to this mode.

Idle

Register	7	6	5	4	3	2	1	0
Features	N/A							
Sector Count	Time period value							
Sector Number	N/A							
Cylinder Low	N/A							
Cylinder High	N/A							
Device/Head	obs	N/A	Obs	DEV	N/A			
Command	97h or E3h							

This command will put the device into Idle mode immediately. If Timer period value is non-zero, the command also sets Standby counter, which will be used once device returns to active mode.

Idle Immediate

Register	7	6	5	4	3	2	1	0
Features	N/A							
Sector Count	N/A							
Sector Number	N/A							
Cylinder Low	N/A							
Cylinder High	N/A							
Device/Head	obs	N/A	obs	DEV	N/A			
Command	95h or E1h							

This command puts the device into Idle mode immediately

Downloaded from Arrow.com.

Sleep

Register	7	6	5	4	3	2	1	0
Features	N/A							
Sector Count	N/A							
Sector Number	N/A							
Cylinder Low	N/A							
Cylinder High	N/A							
Device/Head	Obs	N/A	obs	DEV	N/A			
Command	99h or E6h							

Standby

Register	7	6	5	4	3	2	1	0
Features	N/A							
Sector Count	Time period value							
Sector Number	N/A							
Cylinder Low	N/A							
Cylinder High	N/A							
Device/Head	obs	N/A	obs	DEV	N/A			
Command	96h or E2h							

This command puts the device into Standby mode immediately. If Timer period value is non-zero, the command also sets Standby counter, which will be used once device returns to active mode.

Standby Immediate

Register	7	6	5	4	3	2	1	0
Features	N/A							
Sector Count	N/A							
Sector Number	N/A							
Cylinder Low	N/A							
Cylinder High	N/A							
Device/Head	obs	N/A	obs	DEV	N/A			
Command	94h or E0h							

This command puts the device into Standby mode immediately.

Downloaded from Arrow.com.

9. Troubleshooting

9.1 *Basic Checks*

Most disk problems are caused by improper disk installation. The following should be checked:

- Cable:
  - Improper cable has been used
  - Cables are too long to support the transfer rate
  - Improper cable connection to the device
- Device connector: Improperly locked
- Power supply: Below SSD requirements

9.2 *BIOS Setup*

Verify that the disk is enabled in the BIOS. In most new BIOSs, there is an option for drive auto-identification.

9.3 *Slow Drive Performance*

Poor disk performance may be due to one of the following reasons:

- The SSD was set in the BIOS to support slower Ultra DMA modes (UMDA 0 through 4)
- DMA transfer mode may not be enabled in the Windows OS settings. Windows has a fallback mechanism that causes the disk operating mode to revert to PIO if too many errors occur.
- Check that Write Caching is enabled in the drive under the category Properties.

Downloaded from Arrow.com.

10. Ordering Information

Table 17: SanDisk SSD SATA 5000 2.5" Ordering Information

SDIGF-CCCU-XXXXXX	
SD	SanDisk
I	Interface: S – SATA
G	Generation: 5 – 5000 (5th)
F	Form factor: C – 2.5" (9.5mm)
CCC	Capacity (GB): 004 008 016 032 064
U	Units: G (GB)
XXXXXX	Customer code reference

Example:

SanDisk SSD SATA 5000 2.5" 64GB: SDS5C-064G-000000

Downloaded from Arrow.com.

SanDisk® Corporation general policy does not recommend the use of its products in life support applications where in a failure or malfunction of the product may directly threaten life or injury. Per SanDisk Terms and Conditions of Sale, the user of SanDisk products in life support applications assumes all risk of such use and indemnifies SanDisk against all damages. See "Disclaimer of Liability."

This document is for information use only and is subject to change without prior notice. SanDisk Corporation assumes no responsibility for any errors that may appear in this document, nor for incidental or consequential damages resulting from the furnishing, performance or use of this material. No part of this document may be reproduced, transmitted, transcribed, stored in a retrievable manner or translated into any language or computer language, in any form or by any means, electronic, mechanical, magnetic, optical, chemical, manual or otherwise, without the prior written consent of an officer of SanDisk Corporation.

All parts of the SanDisk documentation are protected by copyright law and all rights are reserved.

SanDisk and the SanDisk logo are registered trademarks of SanDisk Corporation. CompactFlash is a U.S. registered trademark of SanDisk Corporation.

Product names mentioned herein are for identification purposes only and may be trademarks and/or registered trademarks of their respective companies.

© 2007 SanDisk Corporation. All rights reserved.

SanDisk products are covered or licensed under one or more of the following U.S. Patent Nos. 5,070,032; 5,095,344; 5,168,465; 5,172,338; 5,198,380; 5,200,959; 5,268,318; 5,268,870; 5,272,669; 5,418,752; 5,602,987. Other U.S. and foreign patents awarded and pending.

Document No. 80-11-01431 05/07 Printed in U.S.A.

Revision History

February 2007 Preliminary Rev 0.1 – 1st release
May 2007 Rev 0.2 – 2nd release (containing preliminary info on 64GB)

Downloaded from Arrow.com.