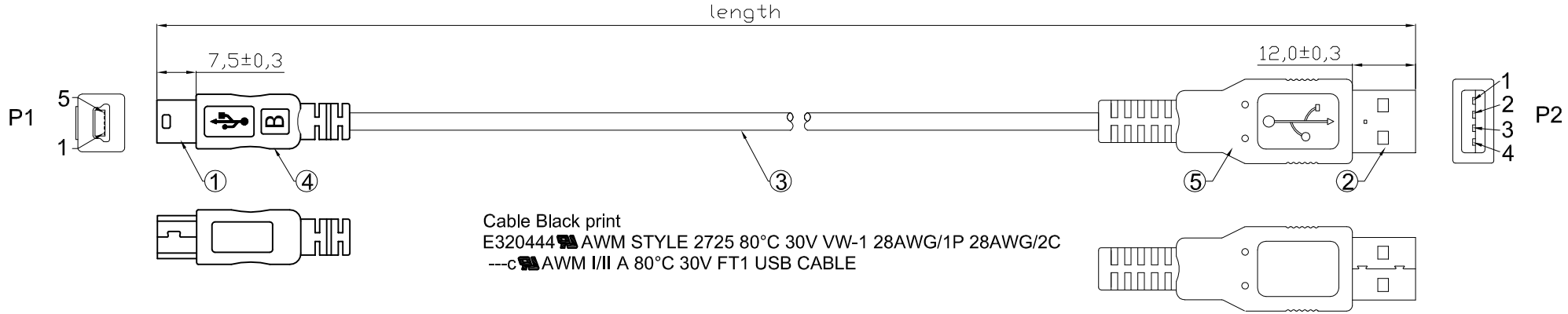

Cable Black print
E320444 AWM STYLE 2725 80°C 30V VW-1 28AWG/1P 28AWG/2C
---c AWM I/II A 80°C 30V FT1 USB CABLE

PE Bag Packing

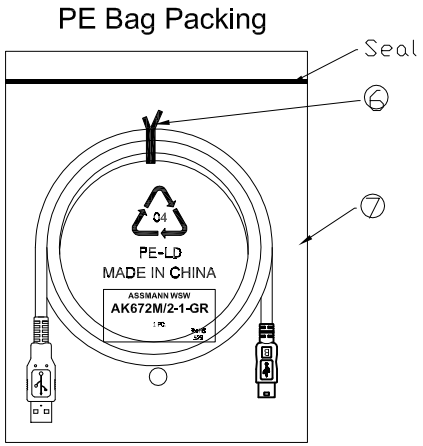

1PCS/PE Bag

PIN ASSIGNMENT

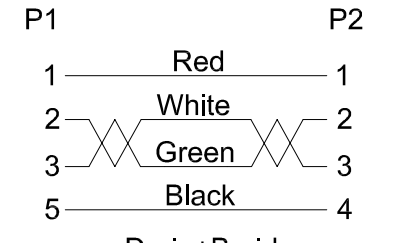

WSW P/N	Jacket color	Length(mm)
AK672M/2-1-GR	Grey	1000±30
AK672M/2-2-GR	Grey	2000±50
AK672M/2-3-GR	Grey	3000±50
AK672M/2-5-GR	Grey	5000±50

Electrical test:
1. 100% short, open, miswire test
2. Conduct resistance: 2 Ohm max.
3. Insulator resistance: 10Mohm min.
4. Dielectric test: DC 300V

NO.	NAME.	Q'TY	SPECIFICATION
⑦	PE Bag	1	Clear Print black "MADE IN CHINA"+ "1PC"
⑥	TIE	2	Black
⑤	Out Jacket	6g	Grey(A-112#) PVC-50P
④	Out Jacket	6g	Grey(A-112#) PVC-50P
③	Cable	1	Grey(A-112#) USB2.0 UL2725 28#/1P+28#/2C+AEB OD:3.8mm
②	CONN	1	USB 2.0 A MALE SHELL:Nickel PIN:G/F Insulator color: White
①	CONN	1	USB 2.0 MINI 5P MALE SHELL:Nickel PIN:G/F Insulator color: Black

RoHS compliant
Unit: mm

Scale	FREE
TOLERANCE	
DIM	TOL
Angle	TOL

Id.	Modification	Date	Name
①	Update the drawing	26.01.2016	Amy
⓪	Drawn	09.05.2014	Amy

	Date	Name
Drawn	09.05.2014	Amy
Approved	26.01.2016	Amy

ASSMANN wsw components

Customer-No.

ASSMANN WSW-No.
AK672M/2-x-GR

Drawing-No.
ASS 7132 CA

rev01

Replace

Sheet

Downloaded from Arrow.com.