ADVANCE by signify

LED Driver

Xitanium DuraVolt

XJ180C180V144PSF2M

Advance Xitanium LED drivers with SimpleSet technology and auxiliary power supply extend the driver application scope to include simple self-contained control solutions for luminaires. The driver provides an additional auxiliary output for powering simple sensors (occupancy/photocell), and the driver has a built-in standby mode through the 0-10V leads. The additional auxiliary power output eliminates the need for a mains relay or power pack for the sensor and allows the sensor to turn the driver on/off and also operate the dimming function.

Specifications

Input Voltage (Vac)	Output Power (W)	Output Voltage (V)	Output Current (A)	Efficiency@ Max. Load and 75°C Case	Max. Case Temp. (°C)	Input Current (A)	Max. Input Power (W)	THD @ Max. Load (%)	Power Factor @ Max. Load	Surge Protection (Combi-Wave, KV)	Envir. Protection Rating	Dimming	Dimming Range (with specified dimmers)	Min. Output Current (A)	Driver Type
277	180	50 - 144	0.1A - 1.8	91.5	Life - 85°C UL - 90°C	0.55	200	<10%	>0.95	6	UL damp & dry and Type HL	0-10V Analog Class 1 and 2 Wiring	10% ~ 100%	0.1	Constant Current
480				93		0.4									

Enclosure

	In. (mm)	Tolerance
Case Length (L2)	8.31 (211.0)	± 0.5mm
Case Width (W)	2.31 (58.0)	± 0.5mm
Case Height (H)	1.48 (37.6)	± 1.0mm
Mounting Length (M)	8.91 (226.2)	± 0.5mm
Overall Length (L1)	9.45 (240.0)	± 1.0mm
Center of SimpleSet Antenna (L3)	3.75 (95.3)	± 1.0mm

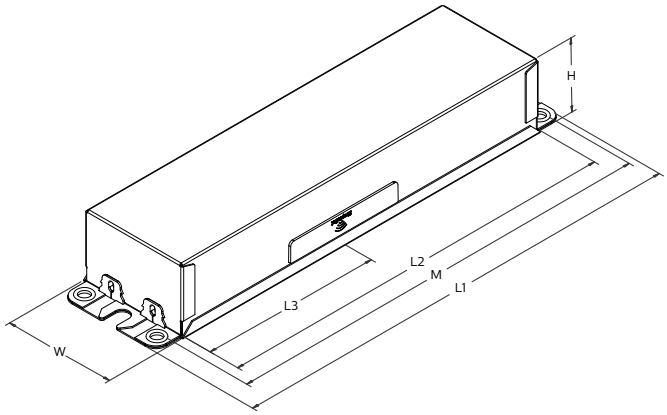

Wiring Diagram

	Wire Length (mm)
Black/Orange (Line)	270 (± 30)
Black/White (Neutral)	270 (± 30)
Red (Positive, LED output)	270 (± 30)
Blue (Negative, LED output)	270 (± 30)
Violet (Positive, 0-10V)	270 (± 30)
Pink* (Negative, 0-10V)	270 (± 30)
Brown (Positive, Aux power output)	270 (± 30)
Pink* (Negative, Aux power output)	270 (± 30)

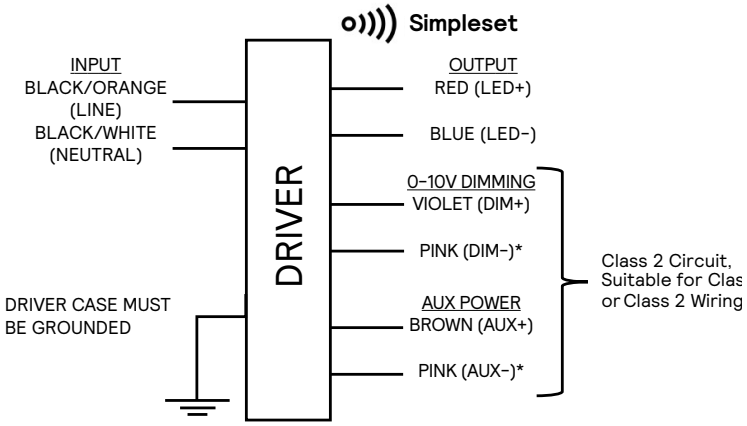

*DIM-, AUX- will change from GREY to PINK from 2021 onwards.

WARNING: Install in accordance with national and local electrical codes. The field-wiring leads or push-in terminals shall be fully enclosed.

RoHS COMPLIANT

c UL us LISTED

Downloaded from Arrow.com.

Xitanium DuraVolt XJ180C180V144PSF2M

180W 0.1–1.8A 0–10V Dimming

Features

- 50,000+ hour lifetime[1]
- 277–480V "DuraVolt" Range
- Dim to off capable
- The Advanced Driver Thermal Limit feature allows OEM's to program tempertures for output current cutback, to protect temperature sensitive components
- Dynadimmer

Benefits

- Enables long life luminaire designs
- Allows luminaire designs for a wide range of ambient environments
- Ideal for use in industrial systems at 277V lines with poor power quality or where loss of neutral issues are prevalent

Application

- Area
- Roadway
- Parking garages
- Floodlights
- High Bay

Electrical Specifications

All the specifications are typical and at 25°C Ta unless specified otherwise.

Product Data

Order Information	
Full Product Code	XJ180C180V144PSF2M (Mid-Pack, 10pcs/Box), 12NC: 929001782013
Line Frequency	50/60Hz
Min. Mains Voltage Operational	250 Vac
Max. Mains Voltage Operational	528 Vac
Output Information	
Maximum Open Circuit Voltage	285 Vdc
Output Current Ripple (ripple = peak to average / average)	15% max @ max Iout (Low frequency ripple (≤120Hz) content <5%)
Output Current Tolerance (in performance window)	<5%
Protections	Short Circuit, Open Circuit Protection for LED + and LED – and Temperature Foldback
Features	
0–10V Dimming Interface current	150µA +/–3% (for dimming voltage >1V)
0–10V Active Range	1V to 8V. See dim curve for details.
0–10V Turn OFF Threshold	<0.5V
0–10V Turn ON Threshold	>0.8V
AOC (Adjustable Output Current)	0.1A–1.8A via SimpleSet (Factory Default at 1.5A)
Additional SimpleSet Configurable Features	Adjustable Startup Time Constant Lumen Over Lifetime Diagnostics Mains Limit Protection Advanced Internal Thermal Protection Dynadimmer
Auxiliary Power Supply Output	
Nominal Aux. Output Voltage	24Vdc (± 10%, including line and load regulation)
Maximum Aux. Output Voltage Ripple (peak/average)	300mV
Rated Aux. Output Power	3W continuous, 10.5W peak for 1.2ms
Peak Power (<60s)	6W

1. Advance Xitanium LED drivers are manufactured to engineering standards correlating to a designed and average life expectancy of 50,000 hours of operation at maximum rated case temperature. Minimum 90% survivals based on MTTF modeling.

Downloaded from Arrow.com.

Electrical Specifications

All the specifications are typical and at 25°C Ta unless specified otherwise.

Product Data (continued)

Max. Output Current at Aux output port	125mA
Turn-on Time (mains applied to output within 90%)	<400 msec
Max. Voltage Overshoot during Turn ON	30Vdc
Max. Voltage Undershoot during Turn ON	8Vdc
Pulse current	250mA for 60 sec
Protections	Short Circuit & Open Circuit Protection for Aux. + and Aux. – and Over-temperature Foldback
Environment & Approbation	
Operating Ambient Temp. Range	-40°C to +55°C
Max Case Temperature (Tcase)	85°C for Life & 90°C for UL Safety
Agency Approbations	UL 8750, cUL, Class P (UL, cUL)
Electromagnetic Compliance	FCC Title 47 Part 15 Class A
Audible Noise	<24dB Class A
Weight	2.1Lbs/ 0.95Kgs

2. Input standby power is < 0.5W when no load on aux. output. With about 0.3W load on aux. output, the input standby power is < 1W.

Downloaded from Arrow.com.

Xitanium DuraVolt XJ180C180V144PSF2M

180W 0.1-1.8A 0-10V Dimming

Electrical Specifications

All the specifications are typical and at 25°C Ta unless specified otherwise.

0-10V Dimming

Dimming source current from the driver: 150uA (@ 0<Vdim<8V)

Minimum dim level: 10% of Iout setting

Maximum output voltage on the dimming wires: 12V

Leakage current of dimming leads: 0.031mA, recommended max number of control circuits in parallel refer to Design-in Guide

Approved Dimmer List

Manufacturer	Manufacturer Part Number
Lutron	Visit www.lutron.com/advance for a list of dimmers (Mark VII) that will work with this driver
Leviton	IllumaTech IP7 series
Advance	Sunrise - SR1200ZTUNV

0-10V Dimming Curve

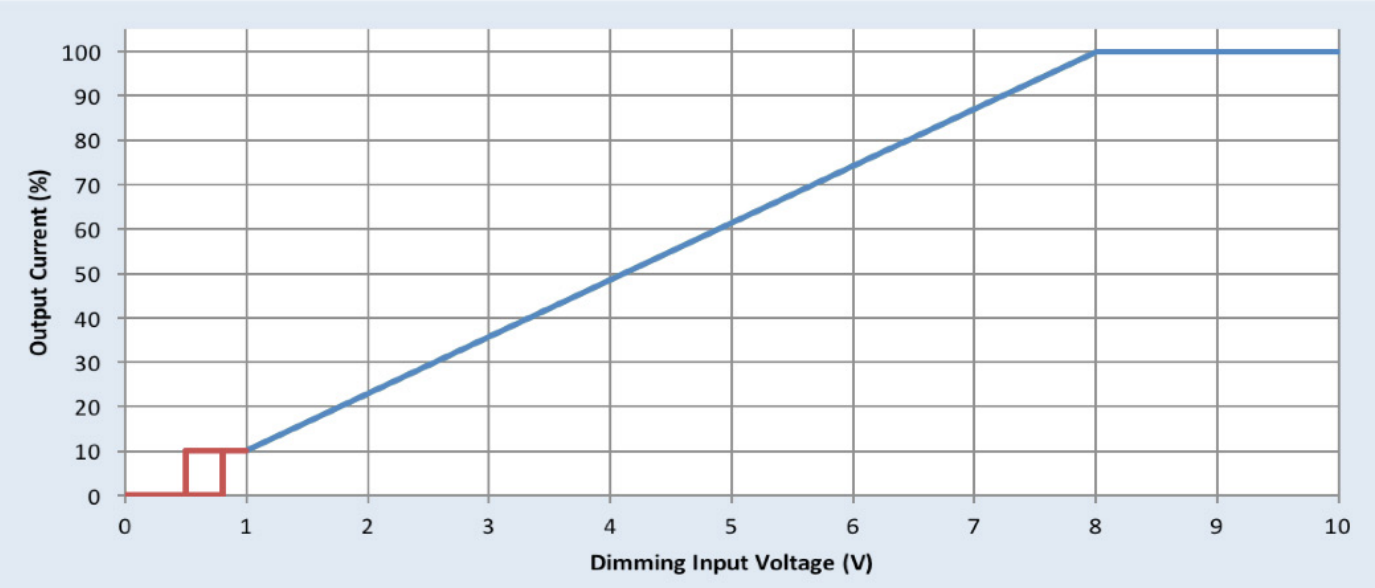

Detail on Hysteresis for ON-OFF

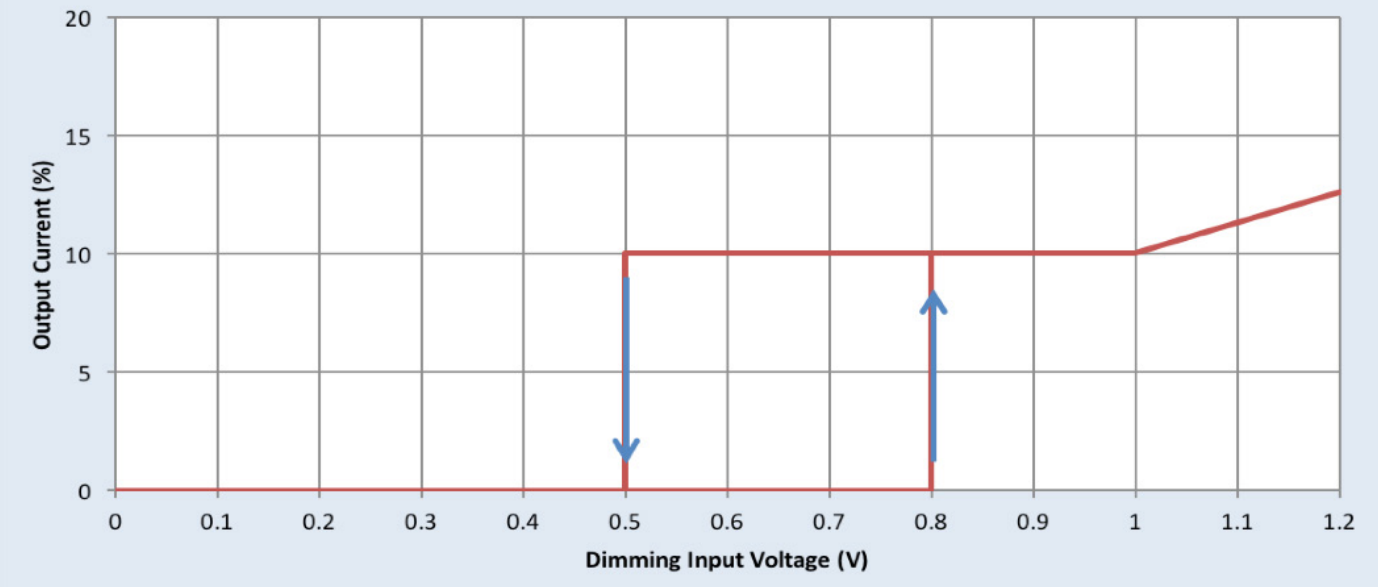

Downloaded from Arrow.com.

Xitanium DuraVolt XJ180C180V144PSF2M

180W 0.1-1.8A 0-10V Dimming

Electrical Specifications

All the specifications are typical and at 25°C Ta unless specified otherwise.

Driver Output Window

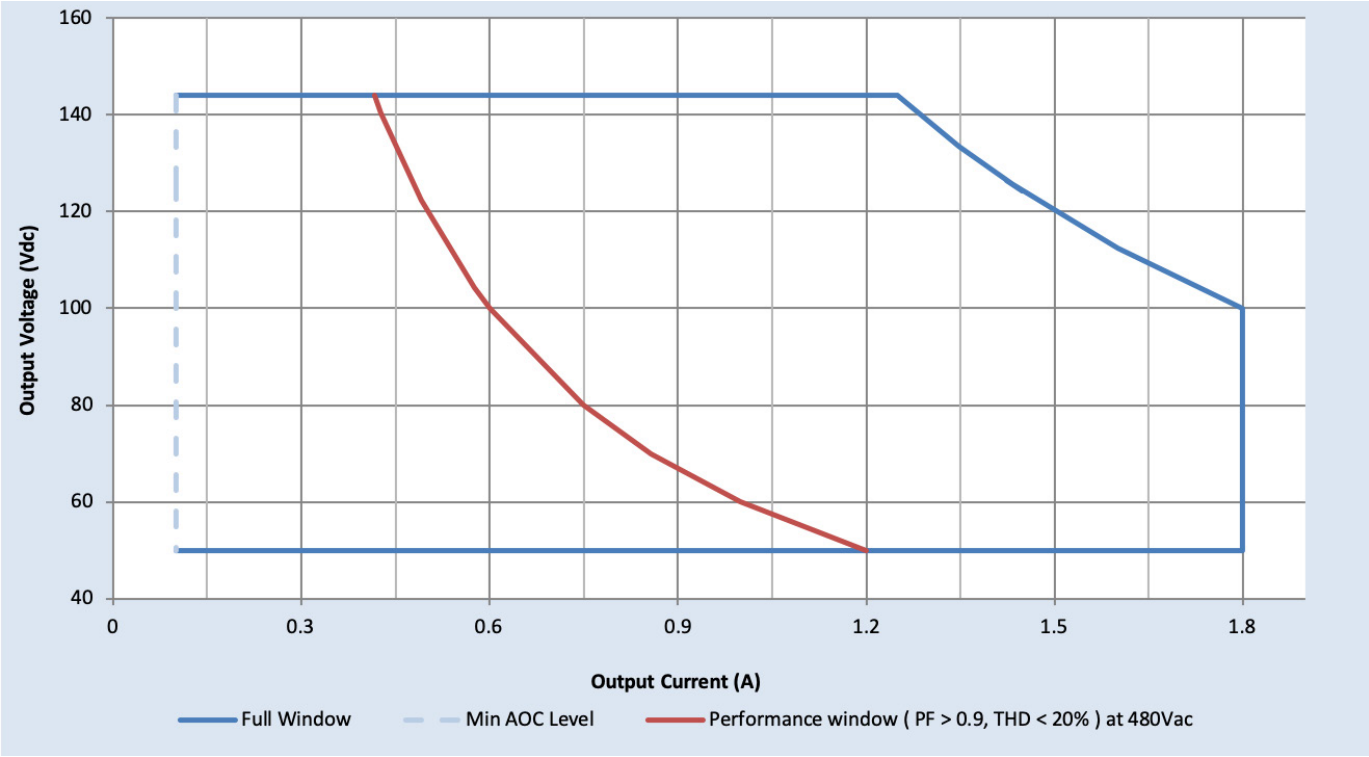

Notes

1. Factory default output current is 1.5A.
2. To get a 100% to 10% dimming range, the output current setting through AOC should be ≥ 1A.
3. Factory default minimum dimming level is 10%. This can be adjusted between 10% and 100% using Advance MultiOne.

Downloaded from Arrow.com.

Xitanium DuraVolt XJ180C180V144PSF2M

180W 0.1-1.8A 0-10V Dimming

Electrical Specifications

All the specifications are typical and at 25°C Ta unless specified otherwise.

Driver Lifetime Vs. Driver Case Temperature

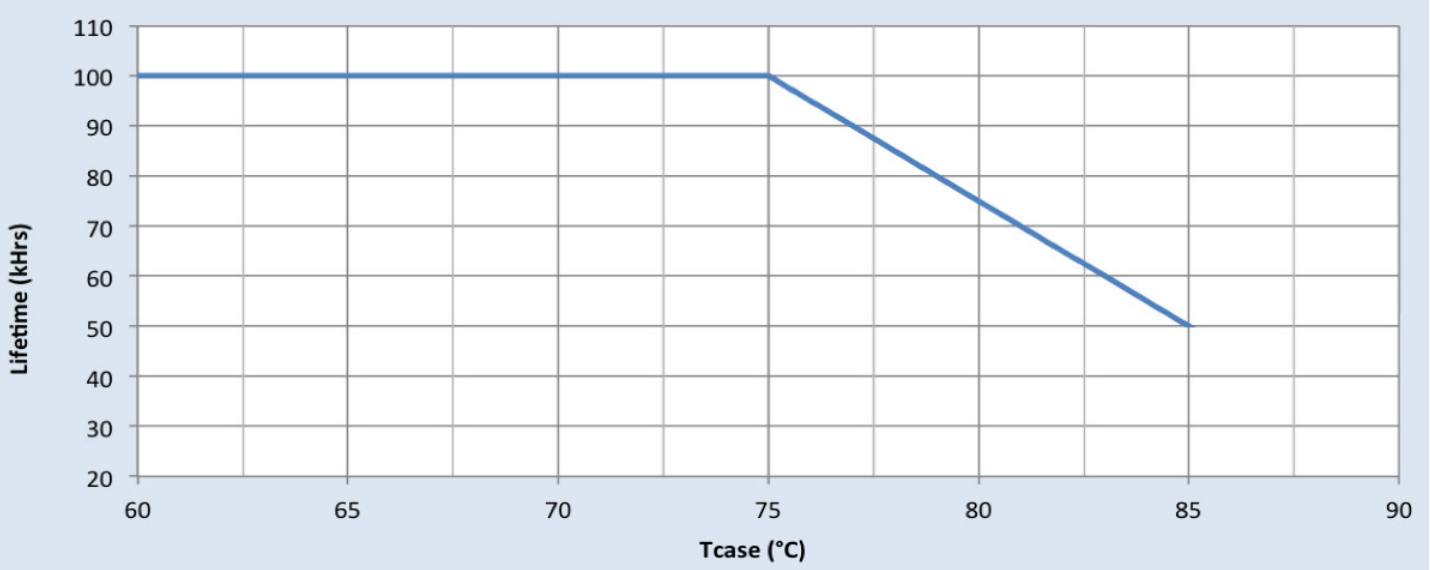

Note

There is ±5°C tolerance on the driver case temperature.

Downloaded from Arrow.com.

Performance Characteristics

Based on measurements on a typical sample at 70°C case. The accuracy of the measurements is within the tolerance of the measurement instruments. Measurements were made with no load on the auxiliary output port.

Efficiency Vs. Output Voltage at 277Vac

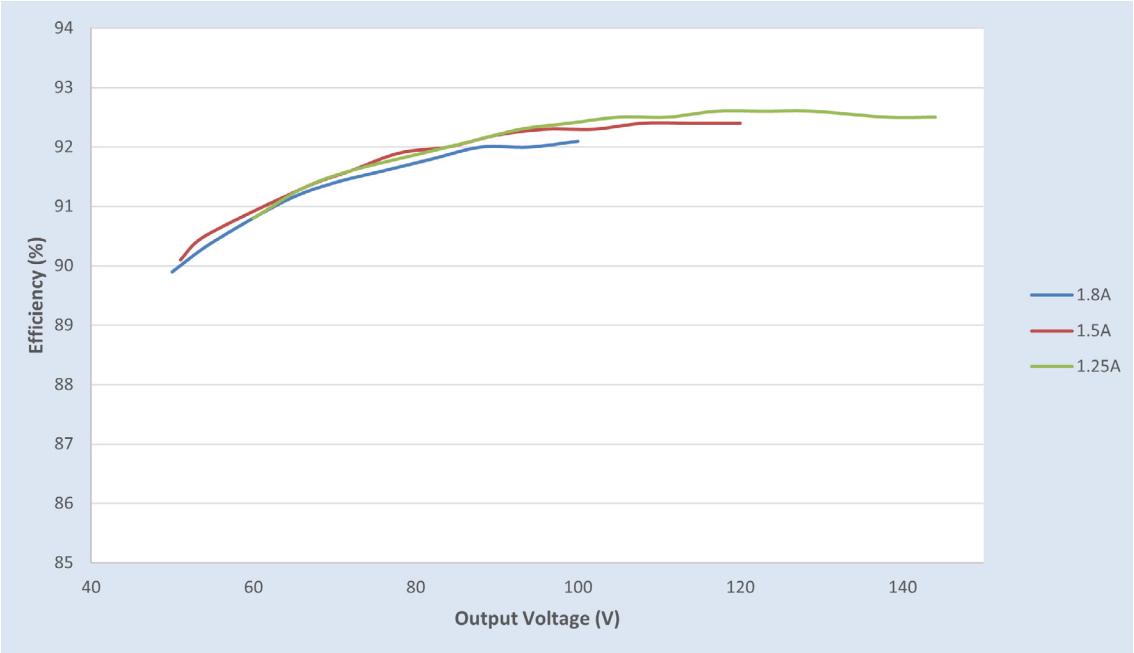

Efficiency Vs. Output Voltage at 347Vac

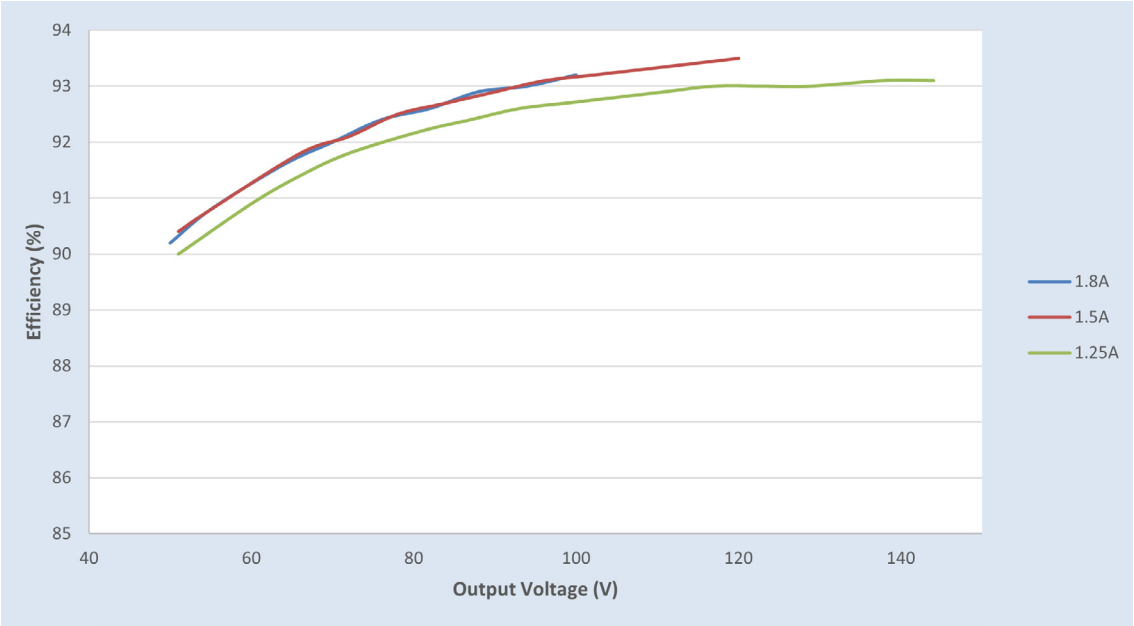

Downloaded from Arrow.com.

Performance Characteristics

Based on measurements on a typical sample at 70°C case. The accuracy of the measurements is within the tolerance of the measurement instruments. Measurements were made with no load on the auxiliary output port.

Efficiency Vs. Output Voltage at 480Vac

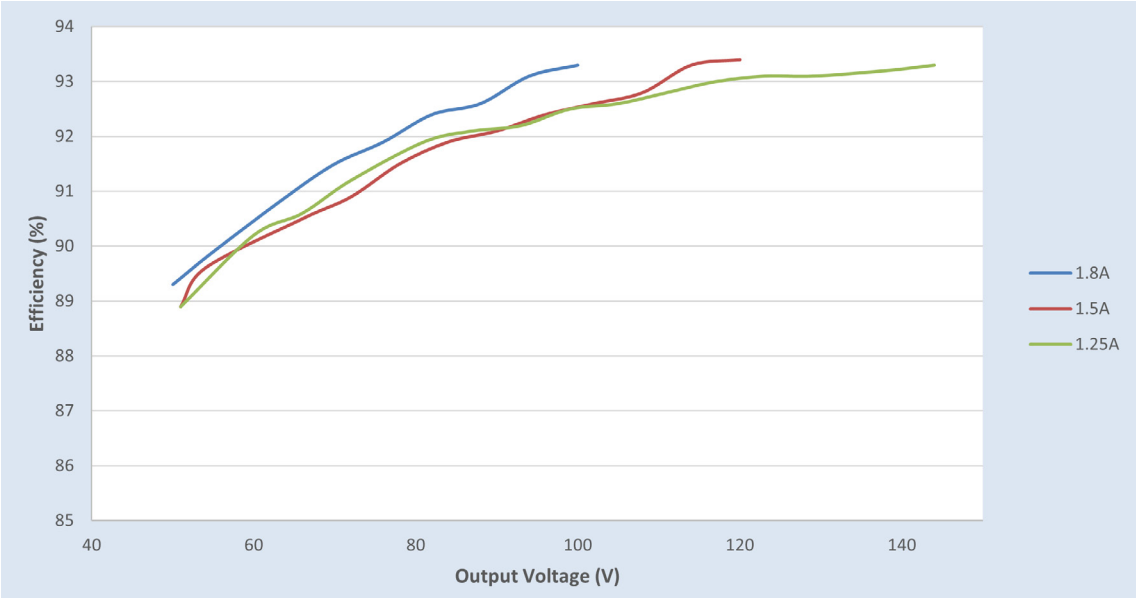

Downloaded from Arrow.com.

Xitanium DuraVolt XJ180C180V144PSF2M

180W 0.1-1.8A 0-10V Dimming

Performance Characteristics

Based on measurements on a typical sample at 70°C case. The accuracy of the measurements is within the tolerance of the measurement instruments. Measurements were made with no load on auxiliary output port.

Power Factor Vs. Output Power

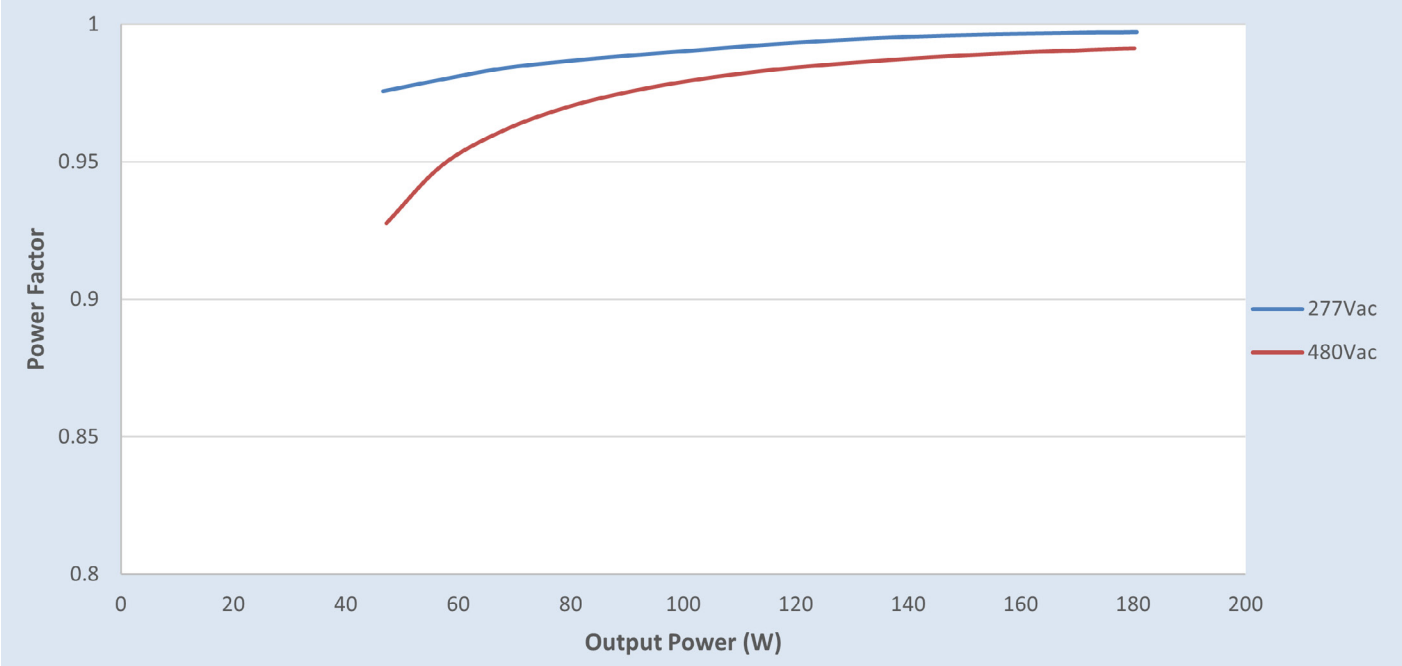

Total Harmonic Distortion (THD) Vs. Output Power

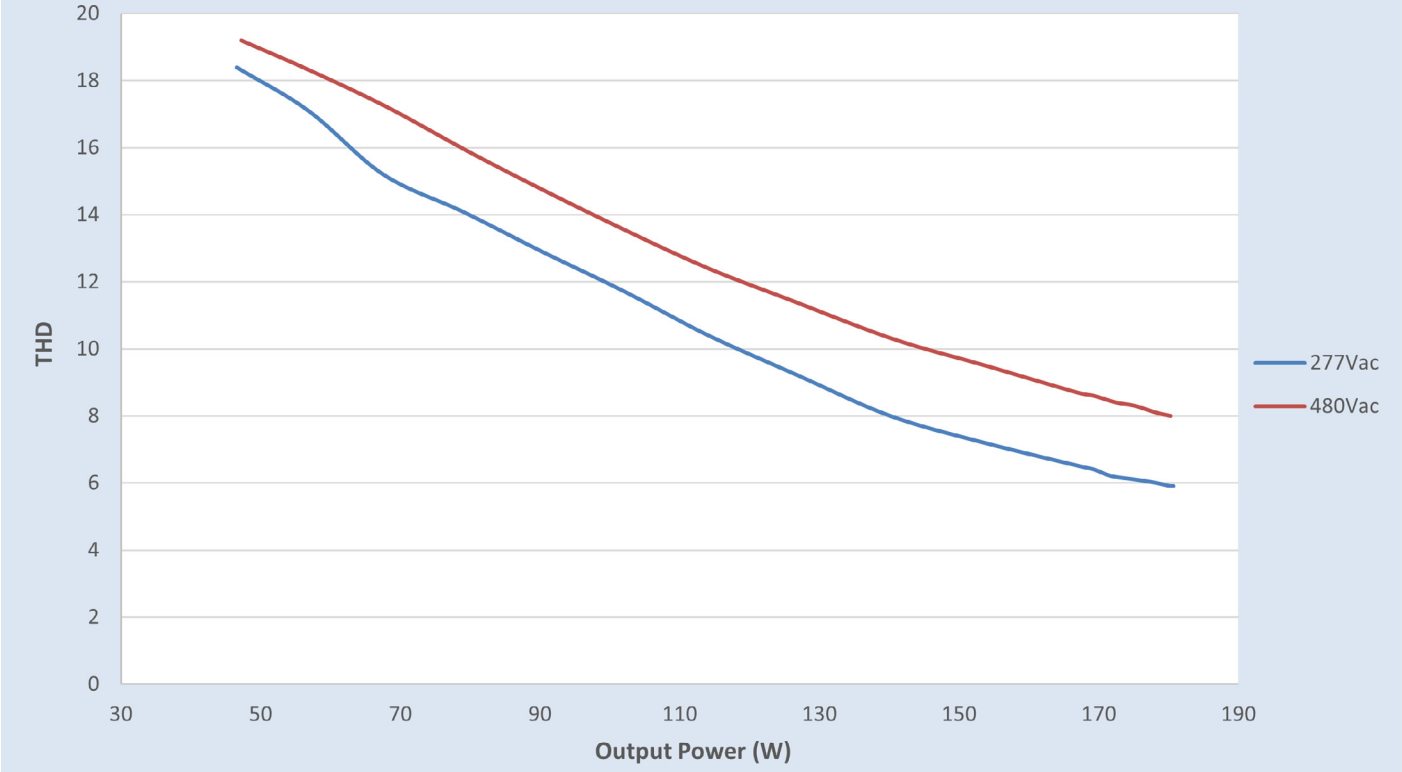

Downloaded from Arrow.com.

Xitanium DuraVolt XJ180C180V144PSF2M

180W 0.1-1.8A 0-10V Dimming

Inrush Current Info

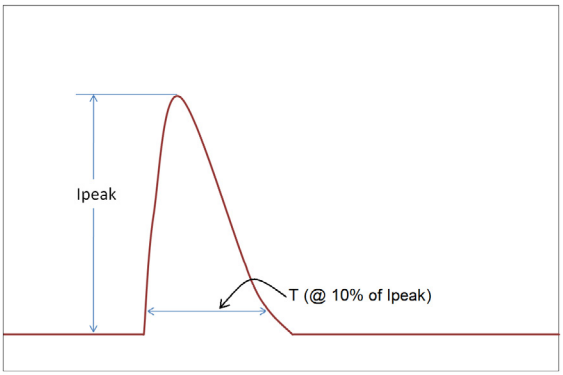

Vin	Ipeak	T (@ 10% of Ipeak)
277 Vac	52A	286µS
480 Vac	91A	289µS

Inrush current is measured at peak of the corresponding line voltage. Source impedance per NEMA 410.

Lightning Surge Info

ANSI Surge Type	Differential Mode (L-N)	Common Mode (L-G, N-G, L&N-G)
Combination Wave (w/t 2Ω)	6kV	6kV

Isolation

Isolation	Input	Output	0-10V	Enclosure
Input	NA	2xU+1kV	2xU+1kV	2xU+1kV
Output	2xU+1kV	NA	2xU+1kV	2xU+1kV
0-10V	2xU+1kV	2xU+1kV	NA	2xU+1kV
Enclosure	2xU+1kV	2xU+1kV	2xU+1kV	NA

U =Max. working voltage

© 2022 Signify Holding. All rights reserved. The information provided herein is subject to change, without notice. Signify does not give any representation or warranty as to the accuracy or completeness of the information included herein and shall not be liable for any action in reliance thereon. The information presented in this document is not intended as any commercial offer and does not form part of any quotation or contract, unless otherwise agreed by Signify.

Signify North America Corporation
400 Crossing Blvd, Suite 600
Bridgewater, NJ 08807
Telephone: 800-555-0050

Signify Canada Ltd.
281 Hillmount Road,
Markham, ON, Canada L6C 2S3
Telephone: 800-668-9008

All trademarks are owned by Signify Holding or their respective owners.

Downloaded from Arrow.com.