MICRO SWITCH
FREEPORT ILLINOIS, U.S.A
A DIVISION OF HONEYWELL
FED. MFG. CODE 91929

SMALL PRECISION LIMIT SWITCH

CATALOG LISTING
914CE19-12

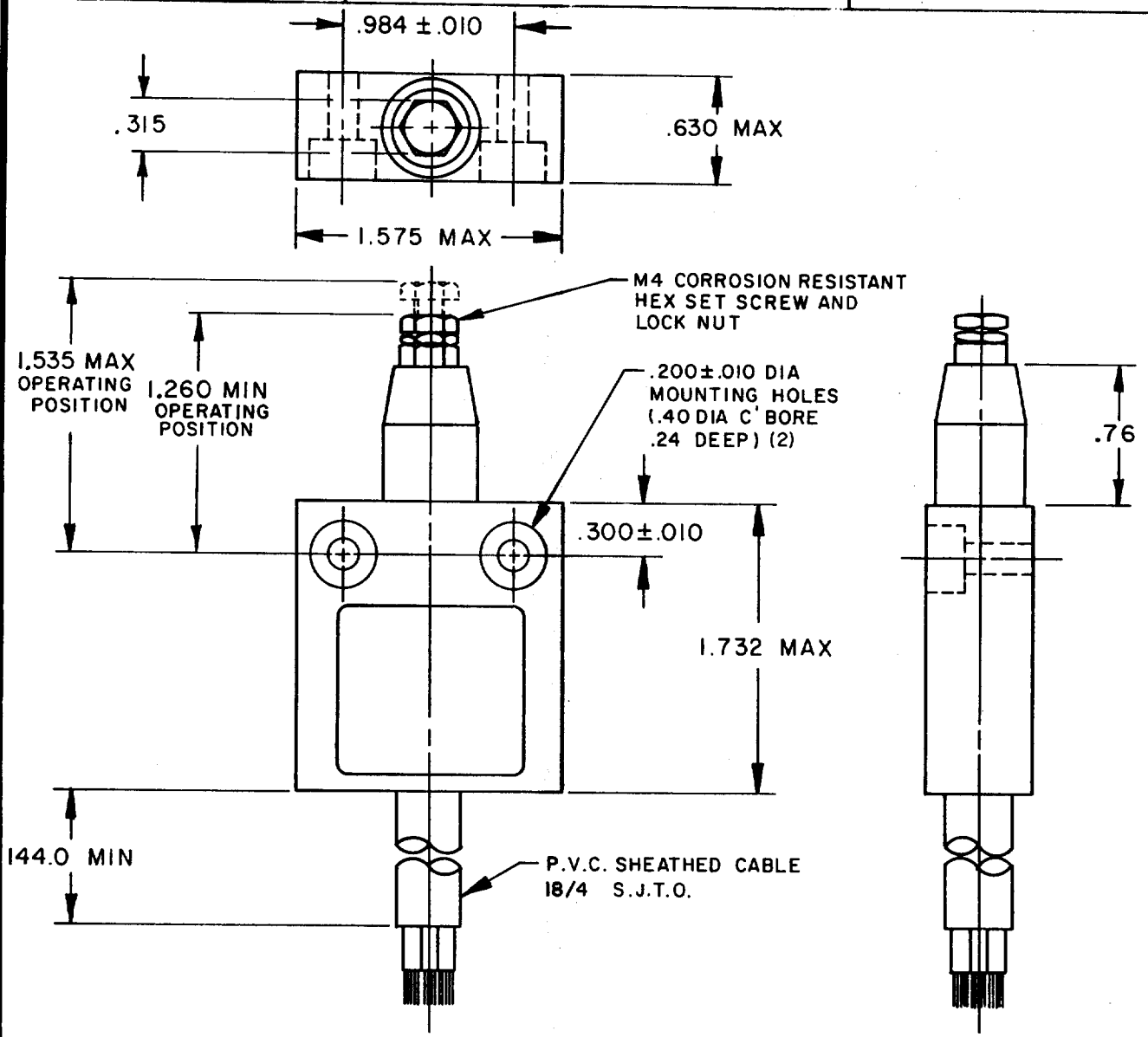

NOTE –

1 – ZINC HOUSING FINISHED WITH GREY PAINT

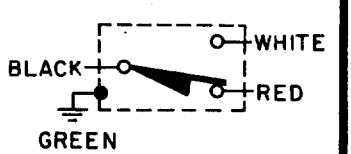

CIRCUIT DIAGRAM

THIS DRAWING COVERS A PROPRIETARY ITEM AND IS THE PROPERTY OF MICRO SWITCH, A DIVISION OF HONEYWELL. THIS DRAWING IS NOT TO BE COPIED OR USED WITHOUT THE APPROVAL OF MICRO SWITCH.

THIRD ANGLE PROJECTION

CHARACTERISTICS

OPERATING FORCE ------ 5 LB MAX

DIFFERENTIAL TRAVEL ---.004 MAX

OVERTRAVEL ---------.118 MIN

ELECTRICAL DATA

CONTACT ARRANGEMENT
S P D T

5A – 250 VAC

1/10 HP – 125 OR 250 VAC

SCALE FULL

DO NOT SCALE PRINT

TOLERANCES
APPLY TO DESIGN UNITS. CONVERSIONS ARE ONLY FOR REFERENCE. UNLESS NOTED, TOLERANCES ARE ±

	DIM. mm	TOL. mm/in	DIM. in	TOL. mm/in
NO PLACES	X	1/.04		
ONE PLACE	X.X	0.4/.016	X.X	0.8/.03
TWO PLACES	X.XX	0.15/.006	X.XX	0.38/.015
THREE PLACES			X.XXX	0.13/.005
ANGLES				

DESIGN UNITS SI METRIC ☐ US CUSTOMARY ■

WEIGHT

M 914CE19-12 | ISSUE X 2 | DRAWING NUMBER | RELEASE NO. PR-15937 | REPLACES

REVISIONS
A C069061 L J F 15 AUG 91

CHECK | CHECK | 5 OCT 87 | CHECK M A M | CHECK | 5 OCT 87 | DRAWN G R T | 0-52848-A

Downloaded from Arrow.com.