REVISIONS		
LTR	DESCRIPTION	DATE
A	INITIAL RELEASE	
B	(CL11) REVISED NOTE 4 ECN: A0214	
C	(CL 11) ADD CAP ECN: C0766	4/30/15

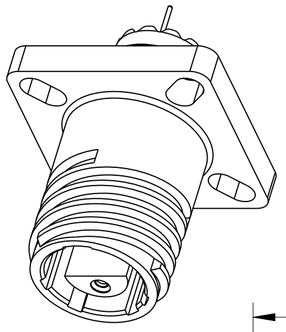

SCALE 2

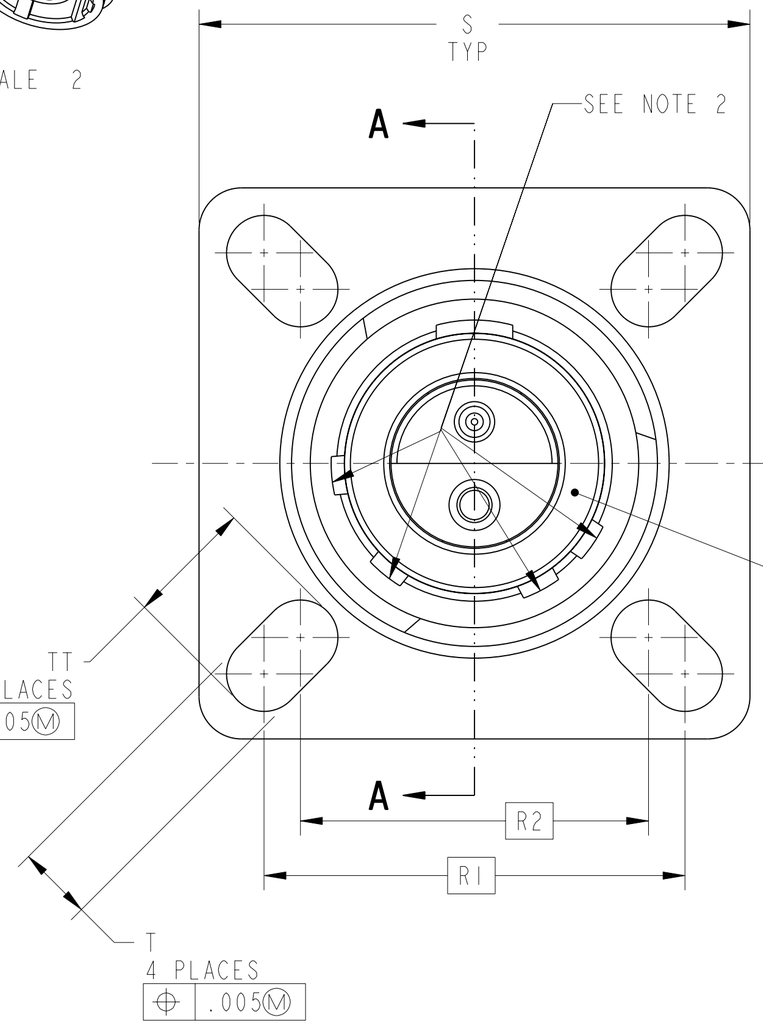

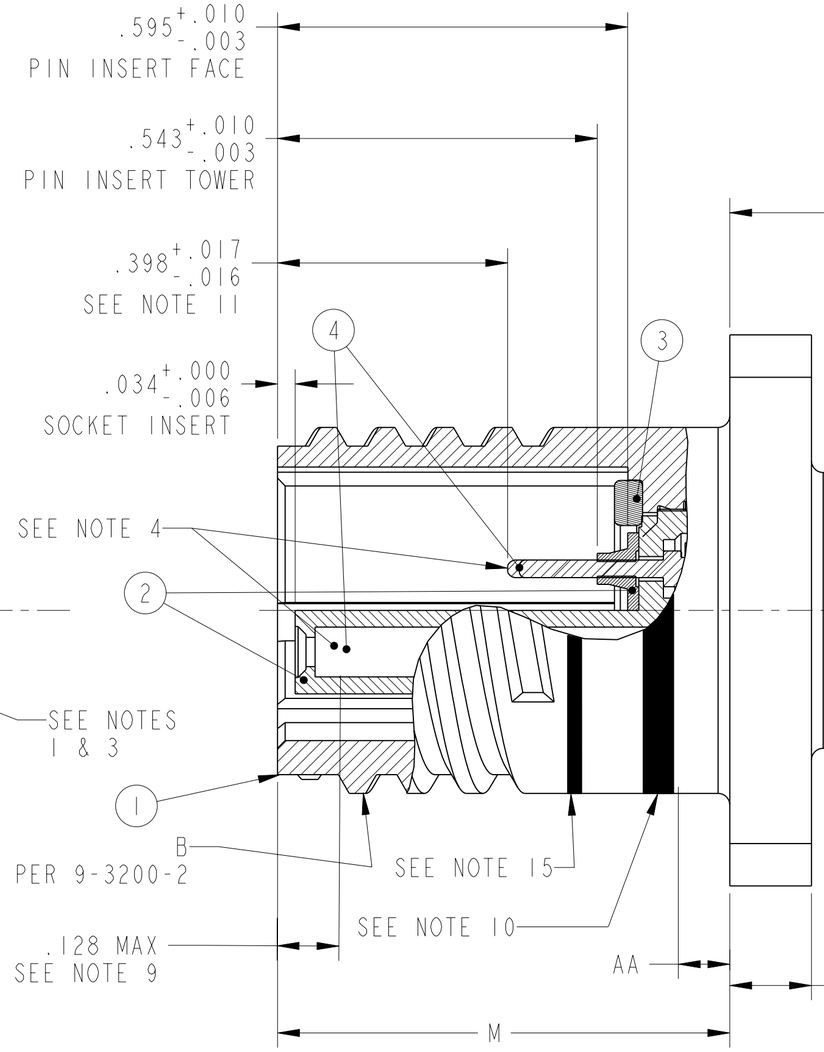

SECTION A-A

POS	QTY	PART NUMBER	DESCRIPTION	NOTE
5	1	SEE TABLE	PROTECTIVE CAP	16
4	SEE P/L	SEE TABLE	CONTACT	5
3	1	10-527257-()	GASKET	5
2	1	10-552440/449-()P OR 10-538170/179-()P OR	INSERT, PIN	3,5
		10-555407/429-()S OR 10-417307/350-()S	INSERT, SOCKET	
1	1	SEE COLUMN	SHELL	5

PARTS LIST

NOTES: SEE SHEET 3

UNLESS OTHERWISE SPECIFIED	SPECIFICATIONS
LINEAR DIMENSIONS ARE IN INCHES TOLERANCES: .XXXX = ±.0005 ANGLES= ±2° .XXX = ±.010 .XX = ±.03 .X = ±.1 --- DIM.& TOL. PER ASME Y14.5M; DRM PER MIL-STD-31000; OTHER Amphenol Stds. PER 9-3800 LEGENDS: =FLAG NOTE CALL OUT REFERENCE ONLY	MATERIAL SPEC. N/A - PROCESS SPEC. SEE NOTE 7 -

APPROVALS	DATE
PREPARED BY D. ALGER	
ENGINEER IN CHARGE D.FREAR	29-JUNE-05
DESIGN MANAGER E.SHEPLER	
DESIGN ACTIVITY GROUP MILAERO	

THIRD ANGLE PROJECTION

AMPHENOL CORPORATION

40-60 DELAWARE AVENUE
SIDNEY, N.Y. 13838

CONNECTOR, ELECTRICAL RECEPTACLE, TYPE CTVPOOR( ), PCB CONTACTS

SIZE	CAGE CODE	DOCUMENT NO.	REV.
C	77820	88/91-644620/629	C
SCALE: 5.0	REF. 91-577370/379	SHEET 1 OF 3	

THE USE OF THIS DOCUMENT IS UNLIMITED.
HOWEVER, DOCUMENTS REFERENCED HEREON
MAY CONTAIN LIMITED RIGHTS DATA.

N/A	PRO/ENGINEER INFORMATION
N/A	Pro/e Model Used: 88-644620_629.ASSEM
NEXT ASSEMBLY	Drawing Name: 88_91-644620_629

IMAGED / Oct . 18 2017, 2:28:57 PM
Downloaded from Arrow.com.

CONTACTS REFERENCE ONLY SEE NOTE 4		
CONTACT SIZE	PIN PART NO.	SOCKET PART NO.
12	10-597502-105	10-597503-075
16	10-497630-055	10-497649-075
20	10-497640-025	10-497643-025
22D	10-407552-055	10-497623-335

PC TAIL PROTECTION CAP	
SHELL SIZE	CAP PART NO.
9	10-070506-10S
11	10-070506-012
13	10-070506-014
15	10-070506-016
17	10-070506-018
19	10-070506-020
21	10-070506-022
23	10-070506-024
25	10-070506-025

STAMP "AMPHENOL", PART NO. AND
DATE CODE (9-3895) PER 9-5788
SEE NOTE 12
EXAMPLE:
AMPHENOL 88-644622-98S 0608
FOR ROTATED KEYWAYS
EXAMPLE:
AMPHENOL 88-644622-98H 0608

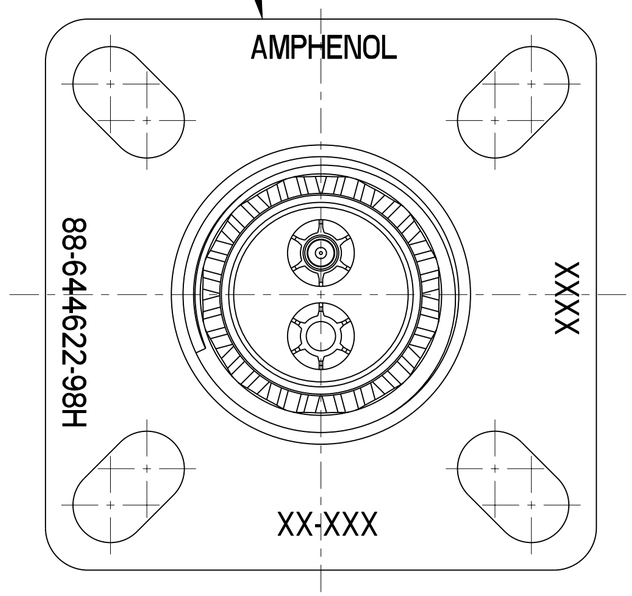

VIEW AT B

NOTES: SEE SHEET 3

NOTES:

THE USE OF THIS DOCUMENT IS UNLIMITED.
HOWEVER, DOCUMENTS REFERENCED HEREON
MAY CONTAIN LIMITED RIGHTS DATA.

SIZE	CAGE CODE	DOCUMENT NO.	REV.
C	77820	88/91-644620/629	C
SCALE: 5.0	REF: 91-577370/379	SHEET 2 OF 3	

IMAGED / Oct . 18 2017, 2:28:57 PM
Downloaded from Arrow.com.

ASSEMBLY NUMBER	CTVP NUMBER REF	SHELL	B THREAD (PLATED) PER 9-3200-2 CLASS 2A	K ±.003	L MAX	M ±.0025	R1	R2	S +.007 -.005	ØT +.008 -.006	V THREAD (PLATED) PER 9-7543	AA MAX PANEL THICKNESS	TT +.008 -.006
( )-644620-()	00R( )- 7-()	NOT AVAILABLE											
( )-644621-()	00R( )- 9-()	10-527244/249-09()	.6250-0.1P-0.3L-TS	.138	.514	.7702	.719	.594	.942	.128	M12X1-6g 0.100R	.234	.216
( )-644622-()	00R( )-11-()	10-527244/249-11()	.7500-0.1P-0.3L-TS				.812	.719	1.037		M15X1-6g 0.100R		.194
( )-644623-()	00R( )-13-()	10-527244/249-13()	.8750-0.1P-0.3L-TS				.906	.812	1.131		M18X1-6g 0.100R		
( )-644624-()	00R( )-15-()	10-527244/249-15()	1.0000-0.1P-0.3L-TS				.969	.906	1.226		M22X1-6g 0.100R		.173
( )-644625-()	00R( )-17-()	10-527244/249-17()	1.1875-0.1P-0.3L-TS				1.062	.969	1.316		M25X1-6g 0.100R		.194
( )-644626-()	00R( )-19-()	10-527244/249-19()	1.2500-0.1P-0.3L-TS				1.156	1.062	1.442		M28X1-6g 0.100R		
( )-644627-()	00R( )-21-()	10-527244/249-21()	1.3750-0.1P-0.3L-TS	.165	.545	.7387	1.250	1.156	1.568		M31X1-6g 0.100R	.204	
( )-644628-()	00R( )-23-()	10-527244/249-23()	1.5000-0.1P-0.3L-TS				1.375	1.250	1.694	.154	M34X1-6g 0.100R		.242
( )-644629-()	00R( )-25-()	10-527244/249-25()	1.6250-0.1P-0.3L-TS				1.500	1.375	1.816		M37X1-6g 0.100R		

SEE FINISH DATA TABLE

TO COMPLETE, ADD INSERT ARRANGEMENT SUFFIX PER 9-2437-25

SEE FINISH DATA TABLE

W=OLIVE DRAB NICKEL BASE
F=ELECTROLESS NICKEL PLATE

FINISH DATA		
ASSY. NO. PREFIX	FINISH	SHELL SUFFIX
88-	OLIVE DRAB NICKEL BASE	-XXR
91-	NICKEL PLATED	-XXT

7. PROCESS SPEC:
   ASSY. 9-5047-11
   TEST 9-5044
   9-2437-25, 9-5788, 9-3200-2, 9-7543, 9-3895

6. PACKAGE PER PRODUCTION PROCESS SHEET.

5. SEE SEPARATE PARTS LIST FOR COMPONENT PART NUMBERS AND QUANTITIES.

4. DRAWING ILLUSTRATES FINAL ASSEMBLY. FOR FINAL INSTALLATION, CONTACTS MUST BE ASSEMBLED INTO ALL INSERT HOLES. ALL UNUSED GROMMET HOLES MUST BE FILLED WITH THE APPROPRIATE SIZE SEALING PLUG. CONTACTS ARE SHIPPED ASSEMBLED. SEE NOTE 16.

3. INSERT ASSEMBLY IS NOT REMOVABLE.

2. ALTERNATE ROTATIONS ARE OBTAINED BY ROTATING INDICATED KEYWAYS. SIX POSITIONS ARE AVAILABLE, SEE 9-2437-25.

1. FOR CONTACT ARRANGEMENT PATTERN, SEE DRAWINGS L-15206-() THRU L-15225-(). ALTERNATE POSITIONS THEREON DO NOT APPLY.

NOTES:

16. AFTER CONTACTS HAVE BEEN INSTALLED, ASSEMBLE PROTECTION CAP TO REAR OF CONNECTOR. TO INSURE CAP LOCATION APPLY TAPE IF NEEDED.

15. FULLY MATED INDICATOR BAND (COLOR RED).

14. UNITS MEET APPLICABLE REQUIREMENTS OF MIL-DTL-38999.

13. DIMENSION INDICATES GROMMET STICKOUT FOR 25-11 INSERT ASSY.

12. SEE WORK ORDER FOR PERMISSIBLE ADDITIONAL OR ALTERNATE STAMPING.

11. FOR SIZE 8 COAX CONTACT INDICATED DIMENSION IS .175 ± .025.

10. BLUE BAND DENOTES REAR RELEASE CONTACT RETENTION SYSTEM.

9. DISTANCE FROM END OF SHELL TO THE POINT AT WHICH A GAGE PIN, HAVING THE SAME BASIC DIAMETER AS THE MATING CONTACT AND A SQUARE FACE, ENGAGES SOCKET CONTACT SPRING.

8. FOR MATING CONNECTOR, SEE 91-577360/369 AND OTHERS.

THE USE OF THIS DOCUMENT IS UNLIMITED. HOWEVER, DOCUMENTS REFERENCED HEREON MAY CONTAIN LIMITED RIGHTS DATA.

IMAGED / Oct . 18 2017, 2:28:57 PM

Downloaded from Arrow.com.