Sound Processors for Car Audios

General-Purpose Electronic Volume with Built-in Advanced Switch

BD37034FV-M

General Description

BD37034FV-M is sound processors for car audio. The functions are stereo 5 input selector, volume, 3-band equalizer, loudness, 6ch fader, mixing, HPF for front and rear, LPF for subwoofer, anti-aliasing-filter, Hi-Voltage output, output level detector. Moreover, “Advanced switch circuit”, that is ROHM original technology, can reduce various switching noise (ex. No-signal, low frequency likes 20Hz & large signal inputs). “Advanced switch” makes control of microcomputer easier, and can construct high quality car audio system.

Features

- Reduce switching noise of volume, mute, fader volume, mixing volume, bass, middle, treble, loudness by using advanced switch circuit [Possible to control all steps].
- Built-in input selector (single 3 / diff 2).
- Decrease the number of external components by built-in 3-band equalizer filter, LPF for subwoofer, loudness filter. And, possible to control Q, Gv, fo of 3-band equalizer and fc of LPF, Gv, fo of loudness by I^2C BUS control freely.
- Built-in mixing volume, Hi-Voltage output.
- Built-in anti-aliasing-filter, anti-GSM-noise-filter.
- Package is SSOP-B28. Putting input-terminals together and output-terminals together can make PCB layout easier and can makes area of PCB smaller.
- It is possible to control by 3.3V / 5V for I^2C BUS.
- AEC-Q100 Qualified.

Applications

- It is the optimal for the car audio. Besides, it is possible to use for the audio equipment of mini Compo, micro Compo, TV etc with all kinds.

Key Specifications

- Total harmonic distortion: 0.004%(Typ.)
- Maximum input voltage: 2.1Vrms(Typ.)
- Cross-talk between selectors: 100dB(Typ.)
- Ripple rejection -65dB(Typ.)
- Output noise voltage: 6μVrms(Typ.)
- Residual output noise voltage: 4μVrms(Typ.)
- Operating Range of Temperature: -40℃ to +85℃

package(s)	W(Typ.) x D(Typ.) x H(Max.)
SSOP-B28	10.00mm x 7.60mm x 1.35mm

SSOP-B28

Typical Application Circuit

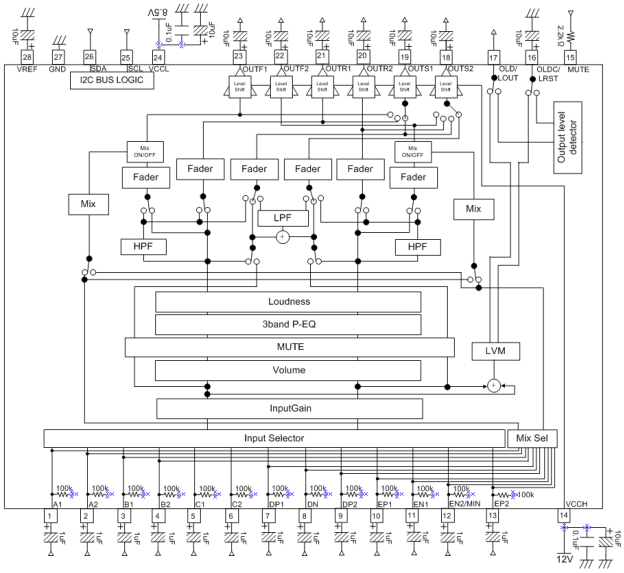

Figure 1. Application Circuit Diagram

○Product structure:Silicon monolithic integrated circuit ○This product is not designed protection against radioactive rays

© 2013 ROHM Co., Ltd. All rights reserved.

Downloaded from Arrow.com.

Pin Configuration

SSOP-B28
(TOP VIEW)

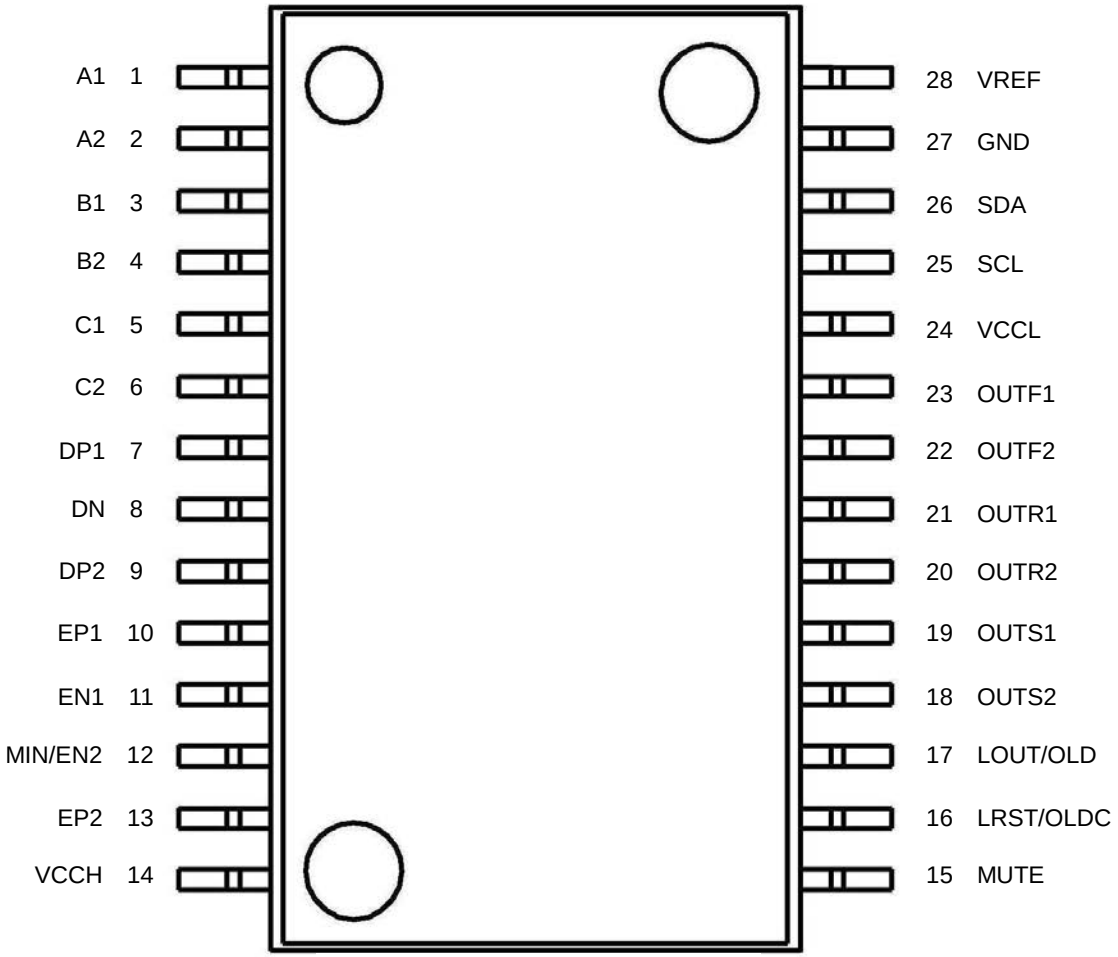

Figure 2. Pin configuration

Pin Descriptions

Terminal Number	Terminal Name	Description	Terminal Number	Terminal Name	Description
1	A1	A input terminal of 1ch	15	MUTE	External compulsory mute terminal
2	A2	A input terminal of 2ch	16	LRST/OLDC	・Level meter reset terminal ・Filter output terminal of output level detector
3	B1	B input terminal of 1ch	17	LOUT/OLD	・Output terminal for Level meter ・Output terminal of output level detector
4	B2	B input terminal of 2ch	18	OUTS2	SW output terminal of 2ch
5	C1	C input terminal of 1ch	19	OUTS1	SW output terminal of 1ch
6	C2	C input terminal of 2ch	20	OUTR2	Rear output terminal of 2ch
7	DP1	D positive input terminal of 1ch	21	OUTR1	Rear output terminal of 1ch
8	DN	D negative input terminal	22	OUTF2	Front output terminal of 2ch
9	DP2	D positive input terminal of 2ch	23	OUTF1	Front output terminal of 1ch
10	EP1	E positive input terminal of 1ch	24	VCCL	VCCL terminal for power supply
11	EN1	E negative input terminal of 1ch	25	SCL	I^2C Communication clock terminal
12	MIN/EN2	・Mixing input terminal ・E negative input terminal of 2ch	26	SDA	I^2C Communication data terminal
13	EP2	E positive input terminal of 2ch	27	GND	GND terminal
14	VCCH	VCCH terminal for power supply	28	VREF	VREF terminal

© 2013 ROHM Co., Ltd. All rights reserved.

Downloaded from Arrow.com.

Block Diagram

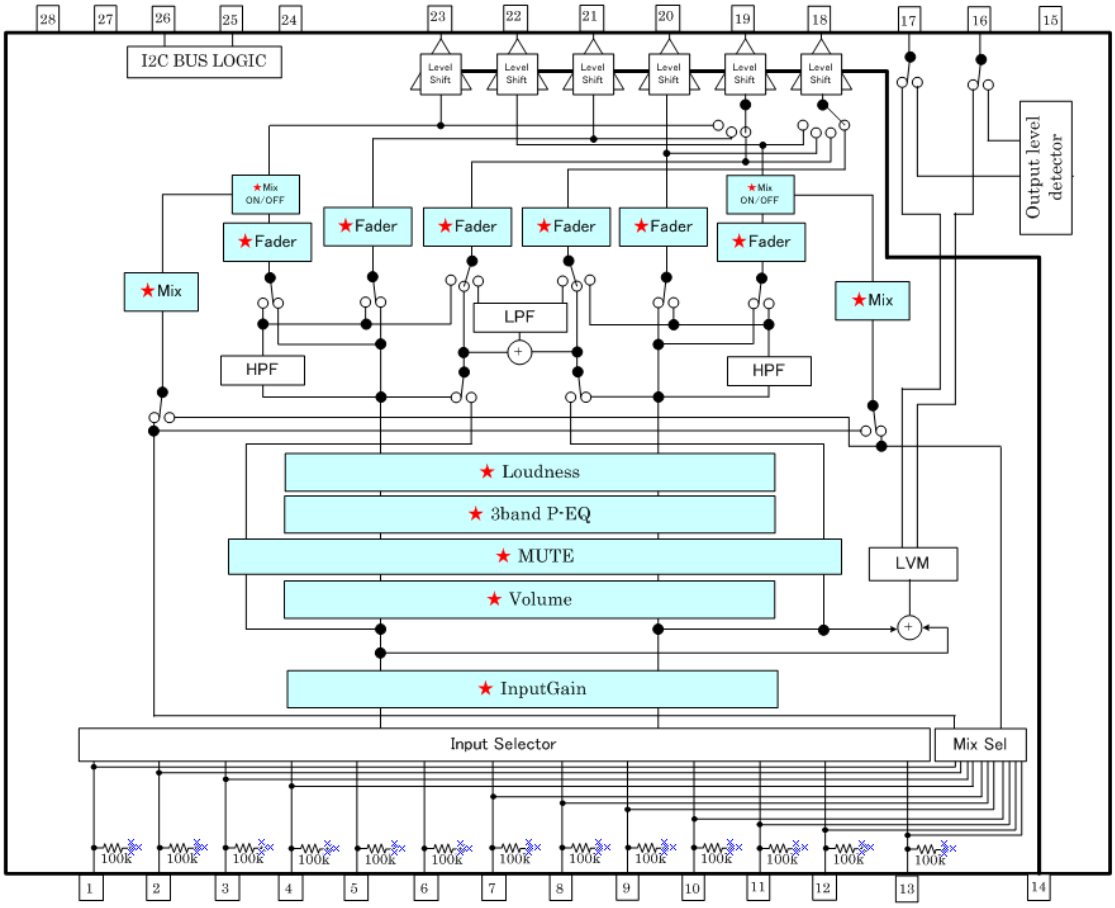

Figure 3. Block Diagram

Absolute Maximum Ratings

Parameter	Symbol	Limits	Unit
Power supply Voltage	VCCL※1	10.0	V
	VCCH※1	13.5	V
Input Voltage	Vin※1	VCCL+0.3 to GND-0.3 Only SCL,SDA 7 to GND-0.3	V
Power Dissipation	Pd	1.06 ※2	W
Storage Temperature	Tastg	-55 to +150	℃

※Maximum voltage which can be impressed referencing GND. Operation using batteries which is used in automobiles directly cannot be guaranteed.
※2 This value decreases 8.5mW/℃ for Ta=25℃ or more.
ROHM standard board shall be mounted
Thermal resistance θja = 117.6(℃/W)
ROHM Standard board Size:70×70×1.6(㎜)
Material:A FR4 grass epoxy board(3% or less of copper foil area)

Operating Range

Parameter	Symbol	Limits	Unit
Power supply voltage	VCCL	7.0 to 9.5	V
	VCCH	VCCL to 13.0	V
Temperature	Topr	-40 to +85	℃

© 2013 ROHM Co., Ltd. All rights reserved.

Downloaded from Arrow.com.

Electrical Characteristic

Unless specified particularly Ta=25℃, VCCL=VCCH=8.5V, f=1kHz, Vin=1Vrms, Rg=600Ω, RL=10kΩ, A input
Input Gain, Volume, Tone control, Loudness, Fader=0dB, LPF, HPF=OFF, Mix OFF, anti-aliasing-filter OFF

BLOCK	Item	Symbol	Limit			Unit	Condition
			Min.	Typ.	Max.		
GENERAL	Current upon no signal	I_Q	-	36	49	mA	No signal
	Voltage gain	G_V	-1.5	0	+1.5	dB	Gv=20log(VOUT/VIN)
	Channel balance	CB	-1.5	0	+1.5	dB	CB = GV1-GV2
	Total harmonic distortion 1 ＊	THD+N1	-	0.004	0.05	%	VOUT=1Vrms BW=400-30KHz VCCH=8.5V(Hi-Voltage OFF)
	Total harmonic distortion 2 ＊	THD+N2	-	0.002	0.05	%	VIN=1Vrms BW=400-30KHz VCCH=12V(Hi-Voltage ON)
	Output noise voltage 1 ＊	V_{NO1}	-	6	12	μVrms	Rg = 0Ω BW = IHF-A VCCH=8.5V(Hi-Voltage OFF)
	Front/Rear Output noise voltage 2 Front/Rear ＊	V_{NO2}	-	16	32	μVrms	Rg = 0Ω BW = IHF-A VCCH=12V(Hi-Voltage ON)
	Subwoofer Output noise voltage 3 Subwoofer ＊	V_{NO3}	-	22	44	μVrms	Rg = 0Ω BW = IHF-A VCCH=12V(Hi-Voltage ON)
	Residual output noise voltage 1＊	V_{NOR1}	-	4	10	μVrms	Fader = -∞dB Rg = 0Ω, BW = IHF-A VCCH=8.5V(Hi-Voltage OFF)
	Front/Rear Residual output noise voltage 2 Front/Rear＊	V_{NOR2}	-	11	22	μVrms	Fader = -∞dB Rg = 0Ω, BW = IHF-A VCCH=12V(Hi-Voltage ON)
	Subwoofer Residual output noise voltage 3 Subwoofer＊	V_{NOR3}	-	16	32	μVrms	Fader = -∞dB Rg = 0Ω,BW = IHF-A VCCH=12V(Hi-Voltage ON)
	Cross-talk between channels ＊	CTC	-	-100	-85	dB	Rg = 0Ω CTC=20log(VOUT/VIN) BW = IHF-A
	Ripple rejection	RR	-	-65	-40	dB	f=1kHz, VRR=100mVrms RR=20log(VCC IN/VOUT)
Input_Selector	Input impedance	R_{IN}	70	100	130	kΩ	
	Maximum input voltage	V_{IM}	2.0	2.1	-	Vrms	VIM at THD+N(VOUT)=1% BW=400-30KHz
	Cross-talk between selectors ＊	CTS	-	-100	-85	dB	Rg = 0Ω CTS=20log(VOUT/VIN) BW = IHF-A
	Common mode rejection ratio ＊	CMRR	46	60	-	dB	XP1 and XN input XP2 and XN input CMRR=20log(VIN/VOUT) BW = IHF-A [※X・・・D/E]

© 2013 ROHM Co., Ltd. All rights reserved.

Downloaded from Arrow.com.

BLOCK	Item	Symbol	Limit			Unit	Condition
			Min.	Typ.	Max.		
Input Gain	Maximum input gain	$G_{V\ MAX}$	+14	+16	+18	dB	Input Gain +16dB VIN=100mVrms Gin=20log(VOUT/VIN)
	Minimum input gain	$G_{V\ MIN}$	-2	0	+2	dB	Input Gain 0dB VIN=1Vrms Gin=20log(VOUT/VIN)
	Gain set error	$G_{V\ ERR1}$	-2	0	+2	dB	GAIN=+16to+1dB
Volume	Maximum boost gain	$G_{V\ MAX}$	+13	+15	+17	dB	Volume +15dB VIN=100mVrms Gin=20log(VOUT/VIN)
	Maximum attenuation ＊	$G_{V\ MIN}$	-83	-79	-75	dB	Volume -79dB VIN=2Vrms Gin=20log(VOUT/VIN)
	Gain set error	$G_{V\ ERR1}$	-2	0	+2	dB	GAIN=+15to+1dB
	Attenuation set error	$G_{V\ ERR2}$	-2	0	+2	dB	ATT=0dBto-79dB
Mute	Mute attenuation ＊	G_{MUTE}	-	-100	-85	dB	Mute ON Gmute=20log(VOUT/VIN) BW = IHF-A
Bass	Maximum boost gain	$G_{B\ BST}$	+13	+15	+17	dB	Gain=+15dB f=100Hz VIN=100mVrms G_B=20log (VOUT/VIN)
	Maximum cut gain	$G_{B\ CUT}$	-17	-15	-13	dB	Gain=-15dB f=100Hz VIN=2Vrms G_B=20log (VOUT/VIN)
	Gain set error	$G_{B\ ERR}$	-2	0	+2	dB	Gain=+15to-15dB f=100Hz
Middle	Maximum boost gain	$G_{M\ BST}$	+13	+15	+17	dB	Gain=+15dB f=1kHz VIN=100mVrms G_M=20log (VOUT/VIN)
	Maximum cut gain	$G_{M\ CUT}$	-17	-15	-13	dB	Gain=-15dB f=1kHz VIN=2Vrms G_M=20log (VOUT/VIN)
	Gain set error	$G_{M\ ERR}$	-2	0	+2	dB	Gain=+15to-15dB f=1kHz
Treble	Maximum boost gain	$G_{T\ BST}$	+13	+15	+17	dB	Gain=+15dB f=10kHz VIN=100mVrms G_T=20log (VOUT/VIN)
	Maximum cut gain	$G_{T\ CUT}$	-17	-15	-13	dB	Gain=-15dB f=10kHz VIN=2Vrms G_T=20log (VOUT/VIN)
	Gain set error	$G_{T\ ERR}$	-2	0	+2	dB	Gain=+15to-15dB f=10kHz
LOUDNESS	Maximum gain	$G_{L\ MAX}$	-17	-15	-13	dB	Gain -15dB f=800Hz VIN=1Vrms G_L=20log(VOUT/VIN)
	Gain set error	$G_{L\ ERR}$	-2	0	+2	dB	Gain=-15 to-1dB

© 2013 ROHM Co., Ltd. All rights reserved.

Downloaded from Arrow.com.

BLOCK	Item	Symbol	Limit			Unit	Condition
			Min.	Typ.	Max.		
Fader/Mix	Maximum boost gain	$G_{F\ BST}$	+13	+15	+17	dB	Fader/Mix=+15dB V_{IN}=100mVrms G_F=20log(VOUT/VIN)
	Maximum attenuation *	$G_{F\ MIN}$	-	-100	-85	dB	Fader=-∞dB, Mix=OFF G_F=20log(VOUT/VIN) BW = IHF-A
	Gain set error	$G_{F\ ERR}$	-2	0	2	dB	Gain=+15 to +1dB
	Attenuation set error 1	$G_{F\ ERR1}$	-2	0	2	dB	ATT=-1 to -15dB
	Attenuation set error 2	$G_{F\ ERR2}$	-3	0	3	dB	ATT=-16 to -47dB
	Attenuation set error 3	$G_{F\ ERR3}$	-4	0	4	dB	ATT=-48 to -79dB
OUTPUT	Output impedance	R_{OUT}	-	-	50	Ω	VIN=100mVrms
	Maximum output voltage1	V_{OM1}	2.50	2.75	-	Vrms	THD+N=1% BW=400-30KHz VCCH=8.5V, LVS=+3dB (Hi-Voltage OFF)
	Maximum output voltage2	V_{OM2}	3.75	4	-	Vrms	THD+N=1% BW=400-30KHz VCCH=12V(Hi-Voltage ON)
Level Meter	Maximum output voltage	$V_{L\ MAX}$	2.8	3.1	3.5	V	
	Maximum offset voltage	$V_{L\ OFF}$	-	15	100	mV	

*VP-9690A(Average value detection, effective value display) filter by Matsushita Communication is used for * measurement.
Phase between input / output is same.

© 2013 ROHM Co., Ltd. All rights reserved.

Downloaded from Arrow.com.

Typical Performance Curve(s)

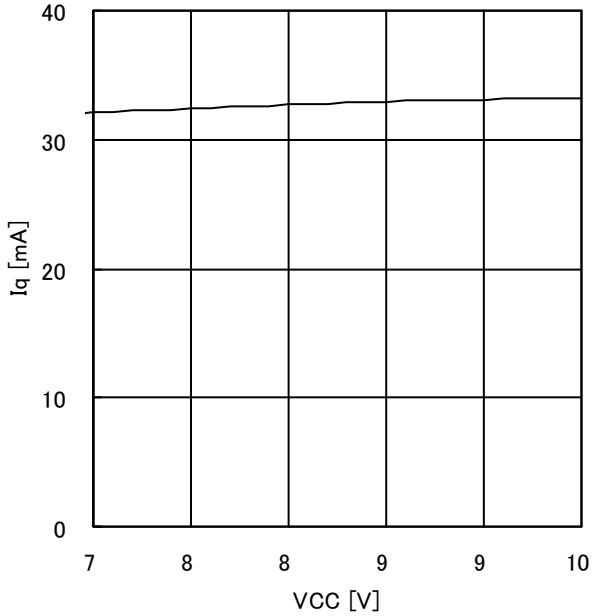

Figure 4. VCCL vs Iq (VCCH=OPEN)

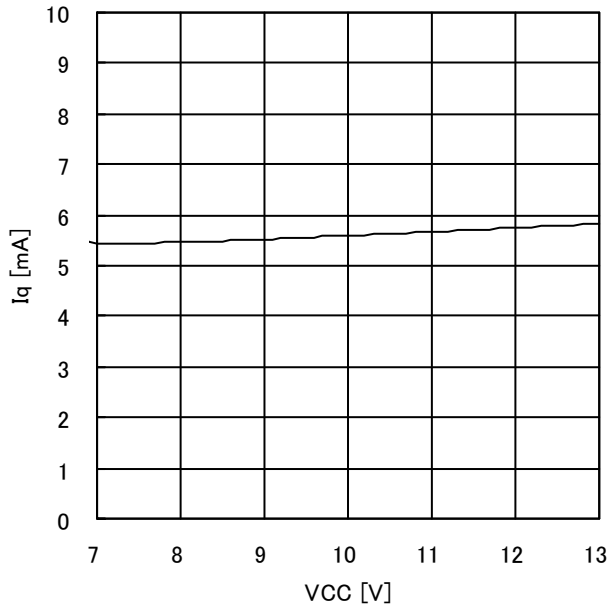

Figure 5. VCCH vs Iq (VCCL=OPEN)

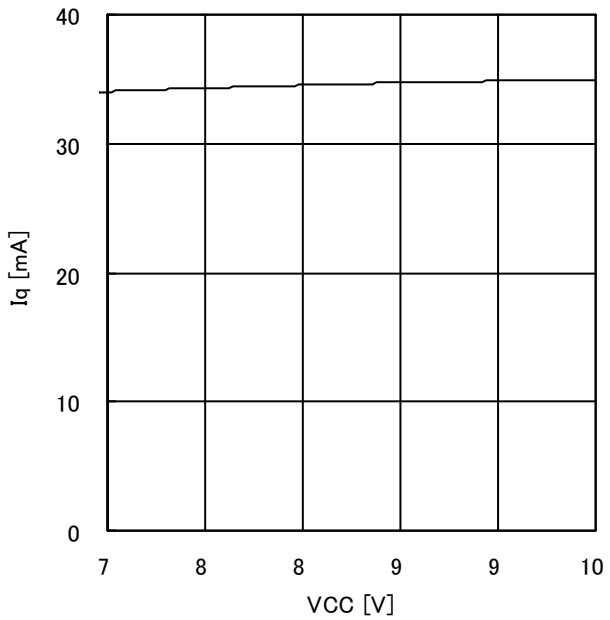

Figure 6. VCCL=VCCH vs Iq

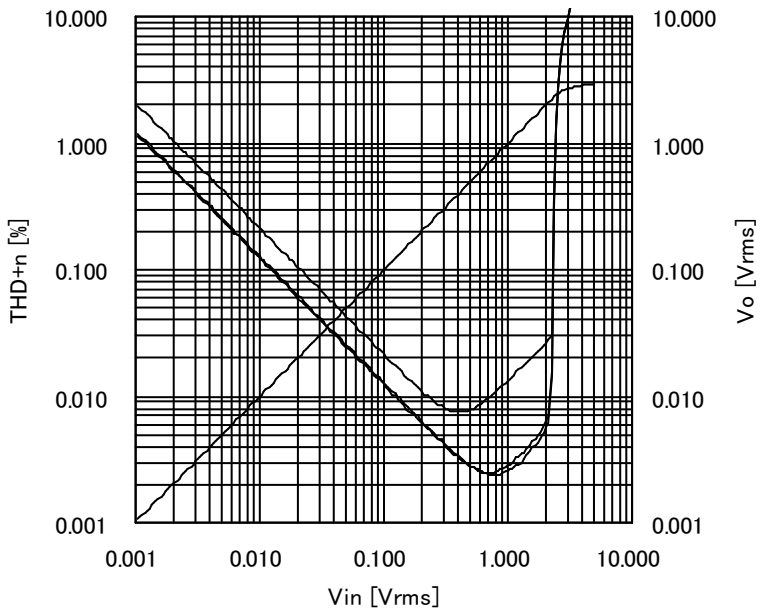

Figure 7. THD vs Vin / Vo

© 2013 ROHM Co., Ltd. All rights reserved.

Downloaded from Arrow.com.

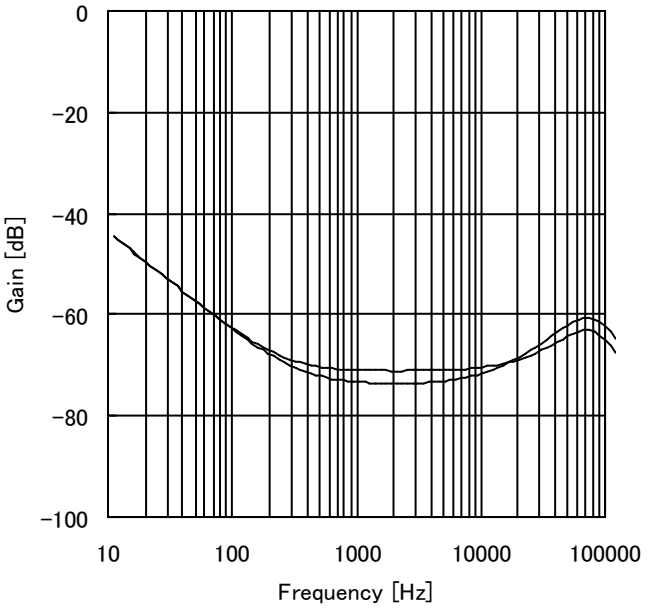

Figure 8. CMRR

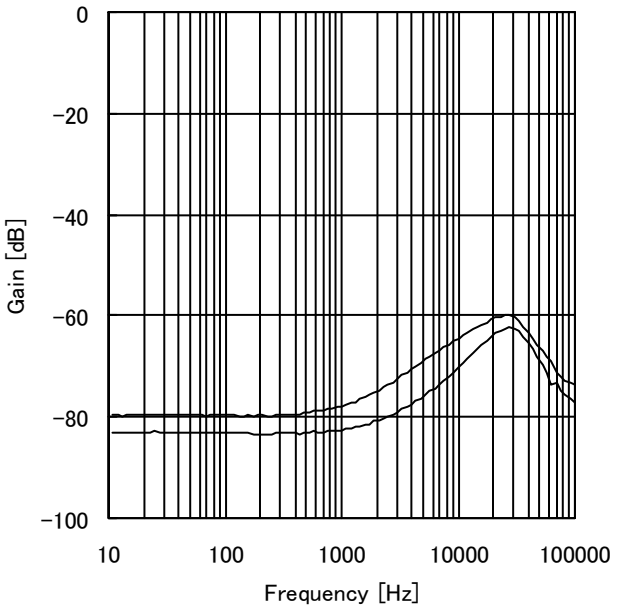

Figure 9. PSRR

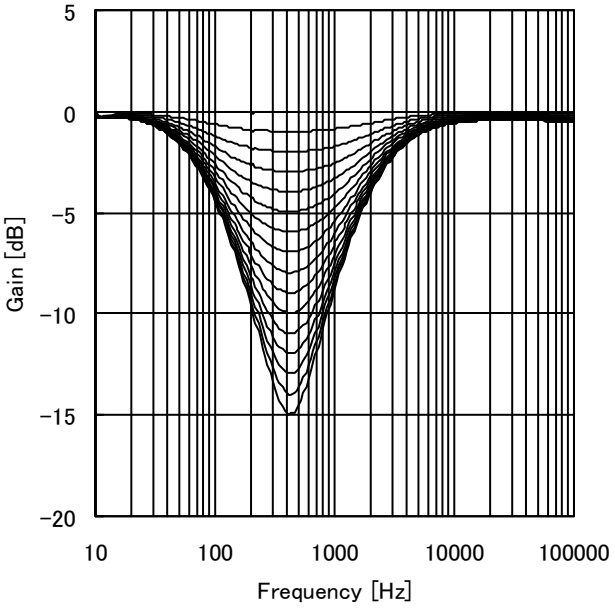

Figure 10. Loudness

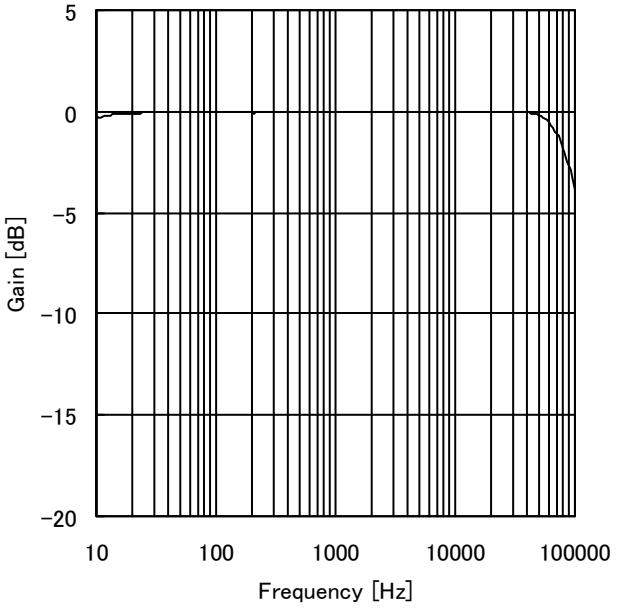

Figure 11. Anti aliasing Filter

© 2013 ROHM Co., Ltd. All rights reserved.

Downloaded from Arrow.com.

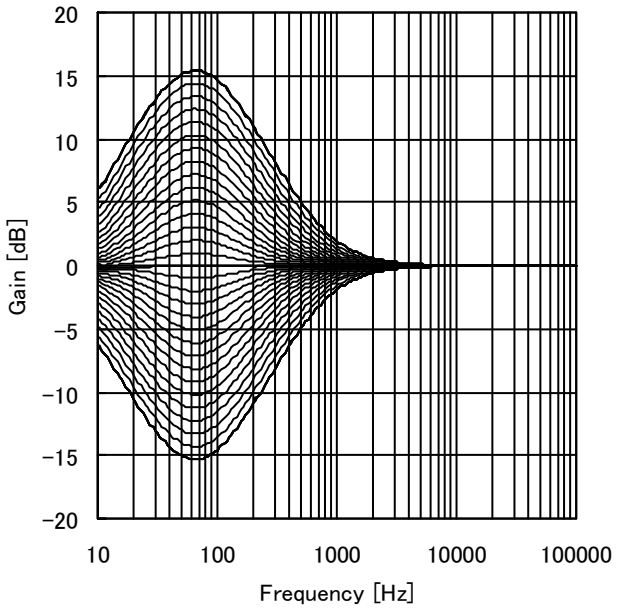

Figure 12. Bass gain vs frequency

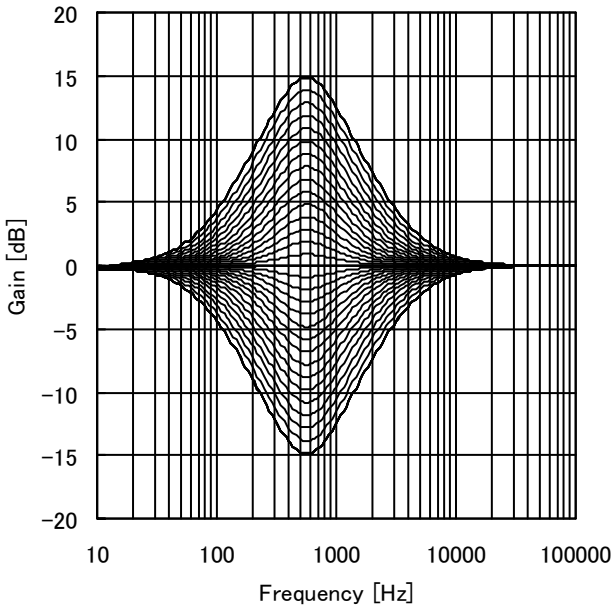

Figure 13. Middle gain vs frequency

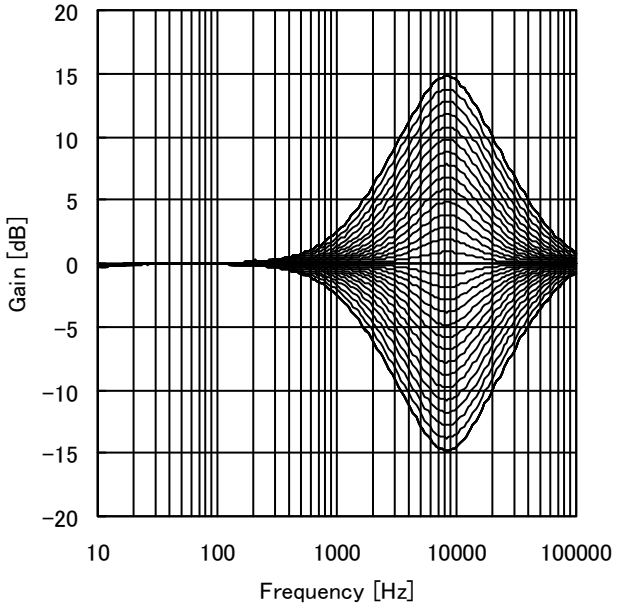

Figure 14. Treble gain vs frequency

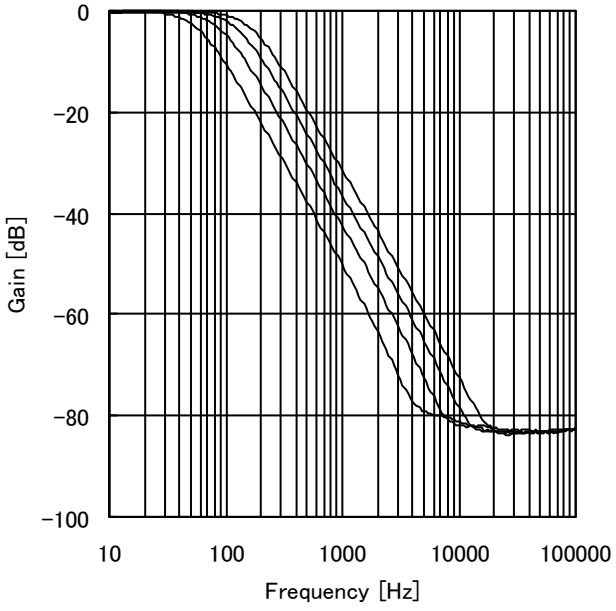

Figure 15. LPF

© 2013 ROHM Co., Ltd. All rights reserved.

Downloaded from Arrow.com.

I²C BUS CONTROL SIGNAL SPECIFICATION

(1) Electrical specifications and timing for bus lines and I/O stages

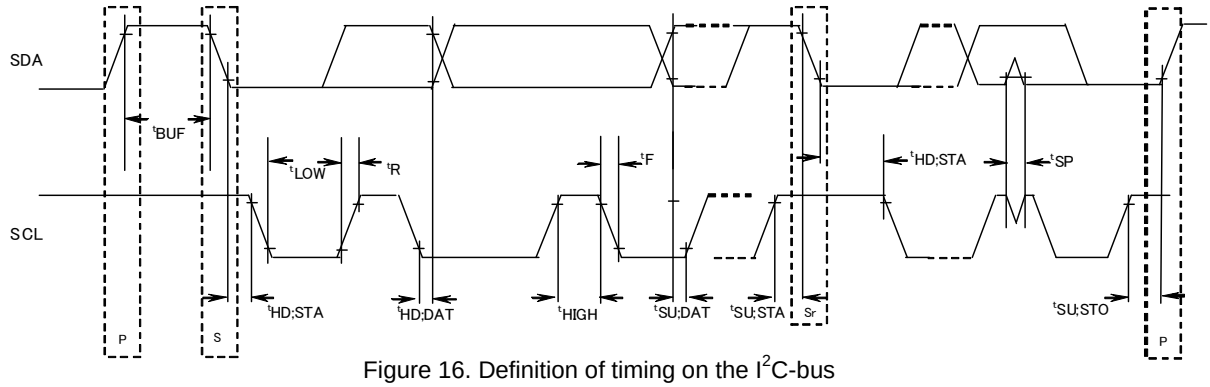

Figure 16. Definition of timing on the I²C-bus

Table 1 Characteristics of the SDA and SCL bus lines for I²C-bus devices(Ta=25℃, VCCL=8.5V)

	Parameter	Symbol	Fast-mode I²C-bus		Unit
			Min.	Max.	
1	SCL clock frequency	fSCL	0	400	kHz
2	Bus free time between a STOP and START condition	tBUF	1.3	–	μS
3	Hold time (repeated) START condition. After this period, the first clock pulse is generated	tHD;STA	0.6	–	μS
4	LOW period of the SCL clock	tLOW	1.3	–	μS
5	HIGH period of the SCL clock	tHIGH	0.6	–	μS
6	Set-up time for a repeated START condition	tSU;STA	0.6	–	μS
7	Data hold time	tHD;DAT	0	–	μS
8	Data set-up time	tSU;DAT	100	–	ns
9	Set-up time for STOP condition	tSU;STO	0.6	–	μS

All values referred to VIH min. and VIL max. Levels (see Table 2).

Table 2 Characteristics of the SDA and SCL I/O stages for I²C-bus devices

	Parameter	Symbol	Fast-mode devices		Unit
			Min.	Max.	
10	LOW level input voltage	VIL	-0.3	1	V
11	HIGH level input voltage	VIH	2.3	5	V
12	Pulse width of spikes which must be suppressed by the input filter.	tSP	0	50	ns
13	LOW level output voltage: at 3mA sink current	VOL1	0	0.4	V
14	Input current each I/O pin with an input voltage between 0.4V and 4.5V	Ii	-10	10	μA

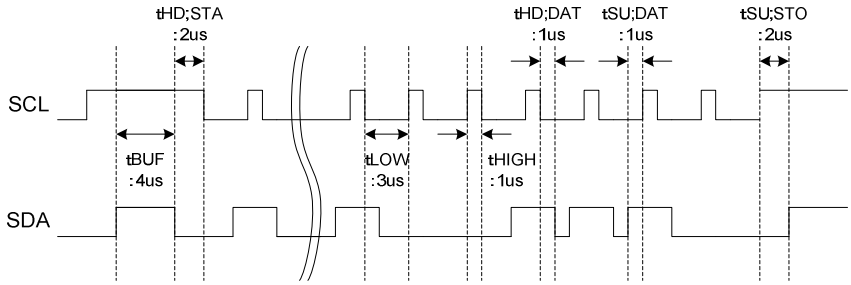

SCL clock frequency :250kHz

Figure 17.
Command timing example in the I2C data transmission

© 2013 ROHM Co., Ltd. All rights reserved.

Downloaded from Arrow.com.

(2)I^{2}C BUS FORMAT

	MSB LSB		MSB LSB		MSB LSB		
S	Slave Address	A	Select Address	A	Data	A	P
1bit	8bit	1bit	8bit	1bit	8bit	1bit	1bit

S = Start conditions (Recognition of start bit)
Slave Address = Recognition of slave address. 7 bits in upper order are voluntary.
The least significant bit is “L” due to writing.
A = ACKNOWLEDGE bit (Recognition of acknowledgement)
Select Address = Select every of volume, bass and treble.
Data = Data on every volume and tone.
P = Stop condition (Recognition of stop bit)

(3)I^{2}C BUS Interface Protocol

1)Basic form

S	Slave Address	A	Select Address	A	Data	A	P
	MSB LSB		MSB LSB		MSB LSB		

2)Automatic increment(Select Address increases (+1) according to the number of data)

S	Slave Address	A	Select Address	A	Data1	A	Data2	A	・・・・	DataN	A	P
	MSB LSB		MSB LSB		MSB LSB		MSB LSB			MSB LSB		

(Example)①Data 1 is set as data of Select Address (20h).
②Data 2 is set as data of Select Address +1 (28h).
③Data N is set as data of Select Address +N-1.

3)Configuration unavailable for transmission (In this case, only Select Address 1 is set.)

S	Slave Address	A	Select Address1	A	Data	A	Select Address 2	A	Data	A	P
	MSB LSB		MSB LSB		MSB LSB		MSB LSB		MSB LSB		

(Note)If any data is transmitted as Select Address 2 next to data,
It is recognized as data, not as Select Address 2.

(4)Slave Address

MSB							LSB	
A6	A5	A4	A3	A2	A1	A0	R/W	
1	0	0	0	0	0	0	0	80H

© 2013 ROHM Co., Ltd. All rights reserved.

Downloaded from Arrow.com.

(5)Select Address and Data

Items	Select Address (hex)	MSB			Data				LSB
		D7	D6	D5	D4	D3	D2	D1	D0
Initial Setup1	01	Advanced Switch ON/OFF	Anti Alias Filter ON/OFF	Advanced Switch Time of Volume/Fader/Mix /Tone/Loudness		Level Shift	Hi-voltage ON/OFF	Advanced Switch Time of Mute	
LPF Setup	02	LPF Phase 0°/180°	Level Meter Reset	Subwoofer Output Selector		Subwoofer Input Selector1	Subwoofer LPF fc		
Initial Setup2	03	Mixing Input Selector			Loudness f0		0	0	Level Meter ON/OFF
Initial Setup3	04	1ch Mix Input sel	2ch Mix Input sel	Rear Input Selector	Front Input Selector	Subwoofer Input Selector2		HPF fc	
Input Selector	05	Full-diff Type	0	0	Input Selector				
Input Gain	06	MUTE ON/OFF	0	0	Input Gain				
Volume Gain	20	Volume Gain / Attenuation							
Fader 1ch Front	28	Fader Gain / Attenuation							
Fader 2ch Front	29	Fader Gain / Attenuation							
Fader 1ch Rear	2A	Fader Gain / Attenuation							
Fader 2ch Rear	2B	Fader Gain / Attenuation							
Fader 1ch Sub	2C	Fader Gain / Attenuation							
Fader 2ch Sub	2D	Fader Gain / Attenuation							
Mixing1 Gain	30	Mixing Gain / Attenuation							
Mixing2 Gain	31	Mixing Gain / Attenuation							
Bass setup	41	0	0	Bass f0		0	0	Bass Q	
Middle setup	44	0	0	Middle f0		0	0	Middle Q	
Treble setup	47	0	0	Treble f0		0	0	0	Treble Q
Bass Gain	51	Bass Boost/Cut	0	0	Bass Gain				
Middle Gain	54	Middle Boost/Cut	0	0	Middle Gain				
Treble Gain	57	Treble Boost/Cut	0	0	Treble Gain				
Loudness Gain	75	0	HICUT		Loudness Gain				
Output Level Detector	90	0	0	Threshold Level Select		OUT F1 ON/OFF	OUT F2 ON/OFF	OUT R1 ON/OFF	OUT R2 ON/OFF
Initial Setup4	A0	0	0	0	0	0	0	0	0
Initial Setup5	A1	0	0	0	0	0	0	0	0
Initial Setup6	A2	0	1	0	1	0	0	0	1
Initial Setup7	A3	0	0	1	0	0	0	0	0
System Reset	FE	1	0	0	0	0	0	0	1

: Advanced Switch

※(Set up bit (It is written with “0” by the above table) which hasn’t been used in “0”.

© 2013 ROHM Co., Ltd. All rights reserved.

Downloaded from Arrow.com.

Note

1. In function changing of the hatching part, it works Advanced switch..

2. Upon continuous data transfer, the Select Address is circulated by the automatic increment function, as shown below.

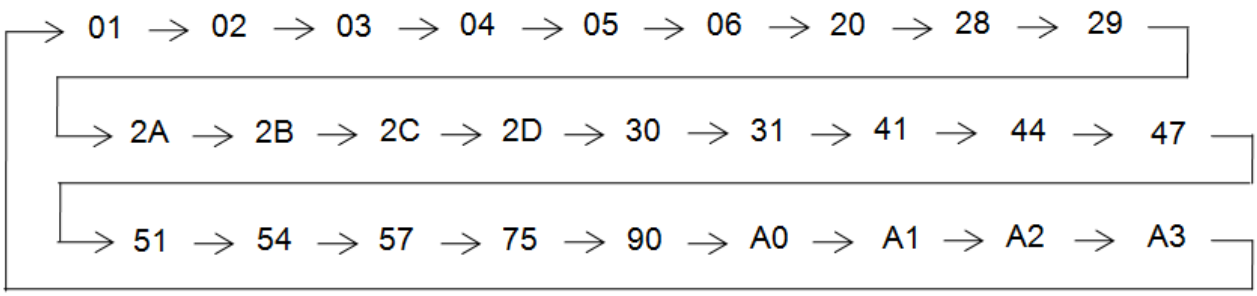

3. For the function of input selector and subwoofer input select etc, it is not corresponded for advanced switch.
   Therefore, please apply mute on the side of a set when changes these setting.

4. When using mute function of this IC at the time of changing input selector, please switch mute ON/OFF
   for waiting advanced-mute time.

© 2013 ROHM Co., Ltd. All rights reserved.

Downloaded from Arrow.com.

Select address 01(hex) Default:8'ha4

Function Name	Mode	MSB			Initial Setup				LSB
		D7	D6	D5	D4	D3	D2	D1	D0
Advanced Switch Time of Mute	0.6msec							0	0
	1.0msec							0	1
	1.4msec							1	0
	3.2msec							1	1
Hi-voltage ON/OFF	OFF						0		
	ON						1		
Level Shift	0dB					0			
	+3dB					1			
Advanced Switch Time of Volume /Fader /Tone/Loudness	4.7msec			0	0				
	7.2msec			0	1				
	11.2msec			1	0				
	14.4msec			1	1				
Anti Alias Filter ON/OFF	OFF		0						
	ON		1						
Advanced Switch ON/OFF	OFF	0							
	ON	1							

Select address 02(hex) Default:8'h00

Function Name	Mode	MSB			LPF Setup				LSB
		D7	D6	D5	D4	D3	D2	D1	D0
Subwoofer LPF fc	55Hz						0	0	0
	85Hz						0	0	1
	120Hz						0	1	0
	160Hz						0	1	1
	PASS						1	0	0
	Prohibition						1	0	1
							1	1	0
							1	1	1
Subwoofer Input Selector1	Loudness					0			
	Input Selector					1			
Subwoofer Output Selector	Subwoofer 1ch(S1/S1)			0	0				
	Front(F1/F2)			0	1				
	Rear(R1/R2)			1	0				
	Subwoofer(S1/S2)			1	1				
Level Meter Reset (*1)	Hold		0						
	Reset		1						
LPF Phase 0°/180°(*2)	0°	0							
	180°	1							

: Initial condition

(*1): If "Level Meter Reset" is set as Reset("b1), a reset pulse will be outputted only once to a level meter block.
Also about this register, after a reset pulse output returns to a Hold("b0) state, without holding a Reset("b1) state.
Therefore, in order to change into a Hold state, it is not necessary to carry out a register setup again.

(*2): If Subwoofer LPF fc is set as 「PASS」('b000), LPF PHASE is compulsorily fixed to 0°('b0).

© 2013 ROHM Co., Ltd. All rights reserved.

Downloaded from Arrow.com.

Select address 03(hex) Default:8'h01

Function Name	Mode	Pin 1p	Pin 1n	Pin 2n	Pin 2p	MSB D7	D6	D5	Initial Setup2 D4	D3	D2	D1	LSB D0
Level Meter ON/OFF(*1)	Output Level Detector Mode												0
	Level Meter Mode												1
Loudness f0	400Hz								0	0			
	800Hz								0	1			
	2400Hz								1	0			
	Prohibition								1	1			
Mixing Input Selector (*2)	Mix	MIN_EN2	-		MIN_EN2	0	0	0					
	Prohibition					0	0	1					
	A_Single	A1	-		A2	0	1	0					
	D_Diff	DP1	DN		DP2	0	1	1					
	B_Single	B1	-		B2	1	0	0					
	E_Diff	EP1	EN1		EP2	1	0	1					
	E_Full-diff	EP1	EN1	MIN_EN2	EP2	1	1	0					
	Prohibition					1	1	1					

(*1): When you use "Output level detector", please set this register of D0 as 0.
Since "Level Meter" and "Output Level Detector" are sharing the terminal, concurrent use is impossible.
Default setup is "Level Meter"

D0	16pin		17pin	
0	OLDC	Filter output terminal of output level detector	OLD	Output terminal of output level detector
1	LRST	Level meter reset terminal	LOUT	Output terminal for Level meter

(*2): When you set Mixing Input Selector as "Mix"('b000), please do not set input Selector(Select Address 05, D0 to D4) as "E_Full_Diff"('b 01000).
When you set Mixing Input Selector as "E_Diff"('b101), please do not set input Selector(Select Address 05, D0 to D4) as "E_Full_Diff"('b 01000).
When you set Mixing Input Selector as "E_Full_Diff"('b110), please do not set input Selector(Select Address 05, D0 to D4) as "E_Diff"('b 00111).

Select address 04(hex) Default:8'h80

Function Name	Mode	MSB D7	D6	D5	HPF Setup D4	D3	D2	D1	LSB D0
HPF fc	55Hz							0	0
	85Hz							0	1
	120Hz							1	0
	160Hz							1	1
Subwoofer Input Selector2	Subwoofer Input Selector1					0	0		
	LPF ON					0	1		
	HPF ON					1	0		
	Prohibition					1	1		
Front Input Selector	Loudness				0				
	HPF ON				1				
Rear Input Selector	Loudness			0					
	HPF ON			1					
1ch Mixing Input Selector	1ch		0						
	2ch		1						
2ch Mixing Input Selector	1ch	0							
	2ch	1							

: Initial condition

© 2013 ROHM Co., Ltd. All rights reserved.

Downloaded from Arrow.com.

Select address 05(hex) Default:8'h00

Function Name	Mode	Pin				MSB			Initial Setup2				LSB
		1p	1n	2n	2p	D7	D6	D5	D4	D3	D2	D1	D0
Input Selector (*1)	A_Single	A1	-	-	A2				0	0	0	0	0
	B_Single	B1	-	-	B2				0	0	0	0	1
	C_Single	C1	-	-	C2				0	0	0	1	0
	D_Single	DP1	-	-	DP2				0	0	0	1	1
	E1_Single	EP1	-	-	EN1				0	1	0	1	0
	E2_Single	EN2	-	-	EP2				0	1	0	1	1
	D_Diff	DP1	-	-	DP2				0	0	1	1	0
	E_Diff	EP1	DN		EP2				0	0	1	1	1
	E_Full_Diff	EP1	EN1		EP2				0	1	0	0	0
	Proibition								Other setting				
	Input short								0	1	0	0	1
Full-diff Type	Negative input					0							
	Bias					1							

(*1): There is combination which shares an input terminal depending on the combination of "Input Selector" (Select Address 05, D0 to D4) and "Mixing Input Selector" (Select Address 03, D5 to D7). Be careful not to set up the following combination.

Input Selector					Mixing Input Selector				
Mode	Pin				Mode	Pin			
	1p	1n	2n	2p		1p	1n	2n	2p
E_Full_Diff	EP1	EN1	MIN_EN2	EP2	Mix	MIN_EN2	-	-	MIN_EN2
E_Full_Diff	EP1	EN1	MIN_EN2	EP2	E_Diff	EP1	EN1		EP2
E_Diff	EP1	EN1		EP2	E_Full_Diff	EP1	EN1	MIN_EN2	EP2

Select address 06 (hex) Default:8'ha0

Function Name	Gain	MSB			Input Selector				LSB
		D7	D6	D5	D4	D3	D2	D1	D0
Input Gain	0dB				0	0	0	0	0
	1dB				0	0	0	0	1
	2dB				0	0	0	1	0
	3dB				0	0	0	1	1
	4dB				0	0	1	0	0
	5dB				0	0	1	0	1
	6dB				0	0	1	1	0
	7dB				0	0	1	1	1
	8dB				0	1	0	0	0
	9dB				0	1	0	0	1
	10dB				0	1	0	1	0
	11dB				0	1	0	1	1
	12dB				0	1	1	0	0
	13dB				0	1	1	0	1
	14dB				0	1	1	1	0
	15dB				0	1	1	1	1
	16dB				1	0	0	0	0
	(16dB)				1	0	0	0	1
	(16dB)				1	0	0	1	0
	(16dB)				1	0	0	1	1
	(16dB)				1	0	1	0	0
	Prohibition				Other setting				
Mute ON/OFF	OFF	0							
	ON	1							

: Initial condition

© 2013 ROHM Co., Ltd. All rights reserved.

Downloaded from Arrow.com.

Select address 20 (hex) Default:8'h00

Function Name	Mode	MSB				Volume Gain			LSB
		D7	D6	D5	D4	D3	D2	D1	D0
Volume Gain	Prohibition	0	0	0	0	0	0	0	0
		⋮	⋮	⋮	⋮	⋮	⋮	⋮	⋮
		0	1	1	1	0	0	0	0
	+15dB	0	1	1	1	0	0	0	1
	+14dB	0	1	1	1	0	0	1	0
	+13dB	0	1	1	1	0	0	1	1
	+12dB	0	1	1	1	0	1	0	0
	+11dB	0	1	1	1	0	1	0	1
	+10dB	0	1	1	1	0	1	1	0
	+9dB	0	1	1	1	0	1	1	1
	+8dB	0	1	1	1	1	0	0	0
	+7dB	0	1	1	1	1	0	0	1
	+6dB	0	1	1	1	1	0	1	0
	+5dB	0	1	1	1	1	0	1	1
	+4dB	0	1	1	1	1	1	0	0
	+3dB	0	1	1	1	1	1	0	1
	+2dB	0	1	1	1	1	1	1	0
	+1dB	0	1	1	1	1	1	1	1
	-0dB	1	0	0	0	0	0	0	0
	-1dB	1	0	0	0	0	0	0	1
	-2dB	1	0	0	0	0	0	1	0
	-3dB	1	0	0	0	0	0	1	1
	-4dB	1	0	0	0	0	1	0	0
	-5dB	1	0	0	0	0	1	0	1
	-6dB	1	0	0	0	0	1	1	0
	-7dB	1	0	0	0	0	1	1	1
	-8dB	1	0	0	0	1	0	0	0
	-9dB	1	0	0	0	1	0	0	1
	-10dB	1	0	0	0	1	0	1	0
	-11dB	1	0	0	0	1	0	1	1
	-12dB	1	0	0	0	1	1	0	0
	-13dB	1	0	0	0	1	1	0	1
	-14dB	1	0	0	0	1	1	1	0
	-15dB	1	0	0	0	1	1	1	1
	-16dB	1	0	0	1	0	0	0	0
	-17dB	1	0	0	1	0	0	0	1
	-18dB	1	0	0	1	0	0	1	0
	-19dB	1	0	0	1	0	0	1	1
	-20dB	1	0	0	1	0	1	0	0

: Initial condition

© 2013 ROHM Co., Ltd. All rights reserved.

Downloaded from Arrow.com.

Function Name	Mode	MSB			Volume Gain				LSB
		D7	D6	D5	D4	D3	D2	D1	D0
Volume Gain	-21dB	1	0	0	1	0	1	0	1
	-22dB	1	0	0	1	0	1	1	0
	-23dB	1	0	0	1	0	1	1	1
	-24dB	1	0	0	1	1	0	0	0
	-25dB	1	0	0	1	1	0	0	1
	-26dB	1	0	0	1	1	0	1	0
	-27dB	1	0	0	1	1	0	1	1
	-28dB	1	0	0	1	1	1	0	0
	-29dB	1	0	0	1	1	1	0	1
	-30dB	1	0	0	1	1	1	1	0
	-31dB	1	0	0	1	1	1	1	1
	-32dB	1	0	1	0	0	0	0	0
	-33dB	1	0	1	0	0	0	0	1
	-34dB	1	0	1	0	0	0	1	0
	-35dB	1	0	1	0	0	0	1	1
	-36dB	1	0	1	0	0	1	0	0
	-37dB	1	0	1	0	0	1	0	1
	-38dB	1	0	1	0	0	1	1	0
	-39dB	1	0	1	0	0	1	1	1
	-40dB	1	0	1	0	1	0	0	0
	-41dB	1	0	1	0	1	0	0	1
	-42dB	1	0	1	0	1	0	1	0
	-43dB	1	0	1	0	1	0	1	1
	-44dB	1	0	1	0	1	1	0	0
	-45dB	1	0	1	0	1	1	0	1
	-46dB	1	0	1	0	1	1	1	0
	-47dB	1	0	1	0	1	1	1	1
	-48dB	1	0	1	1	0	0	0	0
	-49dB	1	0	1	1	0	0	0	1
	-50dB	1	0	1	1	0	0	1	0
	-51dB	1	0	1	1	0	0	1	1
	-52dB	1	0	1	1	0	1	0	0
	-53dB	1	0	1	1	0	1	0	1
	-54dB	1	0	1	1	0	1	1	0
	-55dB	1	0	1	1	0	1	1	1
	-56dB	1	0	1	1	1	0	0	0
	-57dB	1	0	1	1	1	0	0	1
	-58dB	1	0	1	1	1	0	1	0
	-59dB	1	0	1	1	1	0	1	1
	-60dB	1	0	1	1	1	1	0	0
	-61dB	1	0	1	1	1	1	0	1
	-62dB	1	0	1	1	1	1	1	0
	-63dB	1	0	1	1	1	1	1	1
	-64dB	1	1	0	0	0	0	0	0
	-65dB	1	1	0	0	0	0	0	1
	-66dB	1	1	0	0	0	0	1	0
	-67dB	1	1	0	0	0	0	1	1
	-68dB	1	1	0	0	0	1	0	0
	-69dB	1	1	0	0	0	1	0	1
	-70dB	1	1	0	0	0	1	1	0

© 2013 ROHM Co., Ltd. All rights reserved.

Downloaded from Arrow.com.

Function Name	Mode	MSB			Volume Gain				LSB
		D7	D6	D5	D4	D3	D2	D1	D0
Volume Gain	-71dB	1	1	0	0	0	1	1	1
	-72dB	1	1	0	0	1	0	0	0
	-73dB	1	1	0	0	1	0	0	1
	-74dB	1	1	0	0	1	0	1	0
	-75dB	1	1	0	0	1	0	1	1
	-76dB	1	1	0	0	1	1	0	0
	-77dB	1	1	0	0	1	1	0	1
	-78dB	1	1	0	0	1	1	1	0
	-79dB	1	1	0	0	1	1	1	1
	Prohibition	1	1	0	1	0	0	0	0
		⋮	⋮	⋮	⋮	⋮	⋮	⋮	⋮
		1	1	1	1	1	1	1	0
	'-79dB	1	1	1	1	1	1	1	1

Select address 28, 29, 2A, 2B, 2C, 2D, 30, 31(hex) Default:8'hFF

Function Name	Mode	MSB			Fader / Mixing Gain				LSB
		D7	D6	D5	D4	D3	D2	D1	D0
Fader/Mixing Gain	Prohibition	0	0	0	0	0	0	0	0
		⋮	⋮	⋮	⋮	⋮	⋮	⋮	⋮
		0	1	1	1	0	0	0	0
	+15dB	0	1	1	1	0	0	0	1
	+14dB	0	1	1	1	0	0	1	0
	+13dB	0	1	1	1	0	0	1	1
	+12dB	0	1	1	1	0	1	0	0
	+11dB	0	1	1	1	0	1	0	1
	+10dB	0	1	1	1	0	1	1	0
	+9dB	0	1	1	1	0	1	1	1
	+8dB	0	1	1	1	1	0	0	0
	+7dB	0	1	1	1	1	0	0	1
	+6dB	0	1	1	1	1	0	1	0
	+5dB	0	1	1	1	1	0	1	1
	+4dB	0	1	1	1	1	1	0	0
	+3dB	0	1	1	1	1	1	0	1
	+2dB	0	1	1	1	1	1	1	0
	+1dB	0	1	1	1	1	1	1	1

© 2013 ROHM Co., Ltd. All rights reserved.

Downloaded from Arrow.com.

Function Name	Mode	MSB			Fader Gain				LSB
		D7	D6	D5	D4	D3	D2	D1	D0
Fader/Mixing Gain	-0dB	1	0	0	0	0	0	0	0
	-1dB	1	0	0	0	0	0	0	1
	-2dB	1	0	0	0	0	0	1	0
	-3dB	1	0	0	0	0	0	1	1
	-4dB	1	0	0	0	0	1	0	0
	-5dB	1	0	0	0	0	1	0	1
	-6dB	1	0	0	0	0	1	1	0
	-7dB	1	0	0	0	0	1	1	1
	-8dB	1	0	0	0	1	0	0	0
	-9dB	1	0	0	0	1	0	0	1
	-10dB	1	0	0	0	1	0	1	0
	-11dB	1	0	0	0	1	0	1	1
	-12dB	1	0	0	0	1	1	0	0
	-13dB	1	0	0	0	1	1	0	1
	-14dB	1	0	0	0	1	1	1	0
	-15dB	1	0	0	0	1	1	1	1
	-16dB	1	0	0	1	0	0	0	0
	-17dB	1	0	0	1	0	0	0	1
	-18dB	1	0	0	1	0	0	1	0
	-19dB	1	0	0	1	0	0	1	1
	-20dB	1	0	0	1	0	1	0	0
	-21dB	1	0	0	1	0	1	0	1
	-22dB	1	0	0	1	0	1	1	0
	-23dB	1	0	0	1	0	1	1	1
	-24dB	1	0	0	1	1	0	0	0
	-25dB	1	0	0	1	1	0	0	1
	-26dB	1	0	0	1	1	0	1	0
	-27dB	1	0	0	1	1	0	1	1
	-28dB	1	0	0	1	1	1	0	0
	-29dB	1	0	0	1	1	1	0	1
	-30dB	1	0	0	1	1	1	1	0
	-31dB	1	0	0	1	1	1	1	1
	-32dB	1	0	1	0	0	0	0	0
	-33dB	1	0	1	0	0	0	0	1
	-34dB	1	0	1	0	0	0	1	0
	-35dB	1	0	1	0	0	0	1	1
	-36dB	1	0	1	0	0	1	0	0
	-37dB	1	0	1	0	0	1	0	1
	-38dB	1	0	1	0	0	1	1	0
	-39dB	1	0	1	0	0	1	1	1
	-40dB	1	0	1	0	1	0	0	0

© 2013 ROHM Co., Ltd. All rights reserved.

Downloaded from Arrow.com.

Function Name	Mode	MSB			Fader Gain				LSB
		D7	D6	D5	D4	D3	D2	D1	D0
Fader/Mixing Gain	-41dB	1	0	1	0	1	0	0	1
	-42dB	1	0	1	0	1	0	1	0
	-43dB	1	0	1	0	1	0	1	1
	-44dB	1	0	1	0	1	1	0	0
	-45dB	1	0	1	0	1	1	0	1
	-46dB	1	0	1	0	1	1	1	0
	-47dB	1	0	1	0	1	1	1	1
	-48dB	1	0	1	1	0	0	0	0
	-49dB	1	0	1	1	0	0	0	1
	-50dB	1	0	1	1	0	0	1	0
	-51dB	1	0	1	1	0	0	1	1
	-52dB	1	0	1	1	0	1	0	0
	-53dB	1	0	1	1	0	1	0	1
	-54dB	1	0	1	1	0	1	1	0
	-55dB	1	0	1	1	0	1	1	1
	-56dB	1	0	1	1	1	0	0	0
	-57dB	1	0	1	1	1	0	0	1
	-58dB	1	0	1	1	1	0	1	0
	-59dB	1	0	1	1	1	0	1	1
	-60dB	1	0	1	1	1	1	0	0
	-61dB	1	0	1	1	1	1	0	1
	-62dB	1	0	1	1	1	1	1	0
	-63dB	1	0	1	1	1	1	1	1
	-64dB	1	1	0	0	0	0	0	0
	-65dB	1	1	0	0	0	0	0	1
	-66dB	1	1	0	0	0	0	1	0
	-67dB	1	1	0	0	0	0	1	1
	-68dB	1	1	0	0	0	1	0	0
	-69dB	1	1	0	0	0	1	0	1
	-70dB	1	1	0	0	0	1	1	0
	-71dB	1	1	0	0	0	1	1	1
	-72dB	1	1	0	0	1	0	0	0
	-73dB	1	1	0	0	1	0	0	1
	-74dB	1	1	0	0	1	0	1	0
	-75dB	1	1	0	0	1	0	1	1
	-76dB	1	1	0	0	1	1	0	0
	-77dB	1	1	0	0	1	1	0	1
	-78dB	1	1	0	0	1	1	1	0
	-79dB	1	1	0	0	1	1	1	1
	Prohibition	1	1	0	1	0	0	0	0
		⋮	⋮	⋮	⋮	⋮	⋮	⋮	⋮
		1	1	1	1	1	1	1	0
	MUTE	1	1	1	1	1	1	1	1

: Initial condition

© 2013 ROHM Co., Ltd. All rights reserved.

Downloaded from Arrow.com.

Select address 41(hex) Default:8'h00

Function Name	Mode	MSB			Bass setup				LSB
		D7	D6	D5	D4	D3	D2	D1	D0
Bass Q	0.5							0	0
	1.0							0	1
	1.5							1	0
	2.0							1	1
Bass f0	60Hz			0	0				
	80Hz			0	1				
	100Hz			1	0				
	120Hz			1	1				

Select address 44(hex) Default:8'h00

Function Name	Mode	MSB			Middle setup				LSB
		D7	D6	D5	D4	D3	D2	D1	D0
Middle Q	0.75							0	0
	1.00							0	1
	1.25							1	0
	1.50							1	1
Middle f0	0.5kHz			0	0				
	1kHz			0	1				
	1.5kHz			1	0				
	2.5kHz			1	1				

Select address 47(hex) Default:8'h00

Function Name	Mode	MSB			Treble setup				LSB
		D7	D6	D5	D4	D3	D2	D1	D0
Treble Q	0.75								0
	1.25								1
Treble f0	7.5kHz			0	0				
	10kHz			0	1				
	12.5kHz			1	0				
	15kHz			1	1				

: Initial condition

© 2013 ROHM Co., Ltd. All rights reserved.

Downloaded from Arrow.com.

Select address 51, 54, 57(hex) Default:8'h80

Function Name	Mode	MSB			Bass/Middle/Treble Gain				LSB
		D7	D6	D5	D4	D3	D2	D1	D0
Bass /Middle /Treble Gain	0dB				0	0	0	0	0
	1dB				0	0	0	0	1
	2dB				0	0	0	1	0
	3dB				0	0	0	1	1
	4dB				0	0	1	0	0
	5dB				0	0	1	0	1
	6dB				0	0	1	1	0
	7dB				0	0	1	1	1
	8dB				0	1	0	0	0
	9dB				0	1	0	0	1
	10dB				0	1	0	1	0
	11dB				0	1	0	1	1
	12dB				0	1	1	0	0
	13dB				0	1	1	0	1
	14dB				0	1	1	1	0
	15dB				0	1	1	1	1
	(15dB)				1	0	0	0	0
	(15dB)				1	0	0	0	1
	(15dB)				1	0	0	1	0
	(15dB)				1	0	0	1	1
	(15dB)				1	0	1	0	0
	Prohibition				other setting				
Bass/Middle/Treble Boost/Cut	Boost	0							
	Cut	1							

Select address 75(hex) Default:8'h00

Function Name	Mode	MSB			Loudness Gain				LSB
		D7	D6	D5	D4	D3	D2	D1	D0
Loudness Gain	0dB				0	0	0	0	0
	1dB				0	0	0	0	1
	2dB				0	0	0	1	0
	3dB				0	0	0	1	1
	4dB				0	0	1	0	0
	5dB				0	0	1	0	1
	6dB				0	0	1	1	0
	7dB				0	0	1	1	1
	8dB				0	1	0	0	0
	9dB				0	1	0	0	1
	10dB				0	1	0	1	0
	11dB				0	1	0	1	1
	12dB				0	1	1	0	0
	13dB				0	1	1	0	1
	14dB				0	1	1	1	0
	15dB				0	1	1	1	1
	(15dB)				1	0	0	0	0
	(15dB)				1	0	0	0	1
	(15dB)				1	0	0	1	0
	(15dB)				1	0	0	1	1
	(15dB)				1	0	1	0	0
	Prohibition				other setting				
Loudness HICUT	HICUT1		0	0					
	HICUT2		0	1					
	HICUT3		1	0					
	HICUT4		1	1					

: Initial condition

© 2013 ROHM Co., Ltd. All rights reserved.

Downloaded from Arrow.com.

Select address 90(hex) Default:8'h00

Function Name	Mode	MSB		Output Level Detector					LSB
		D7	D6	D5	D4	D3	D2	D1	D0
OUT R2 ON/OFF	OFF								0
	ON								1
OUT R1 ON/OFF	OFF							0	
	ON							1	
OUT F2 ON/OFF	OFF						0		
	ON						1		
OUT F1 ON/OFF	OFF					0			
	ON					1			
Threshold Level Select	±30mV			0	0				
	±45mV			0	1				
	±60mV			1	0				
	±75mV			1	1				

: Initial condition

© 2013 ROHM Co., Ltd. All rights reserved.

Downloaded from Arrow.com.

Recommendation of VOLUME DIAGRAM

The example of the SET VOLUME DIAGRAM by Volume(SelectAddress 20(hex)) and Fader(SelectAddress 28,29,2A,2B,2C, 2D(hex)) is explained in the following.

Example 1) It is recommended when a signal level is made to attenuate, a decline by Volume is done by -24dB. It is adjusted with Fader after -24dB. S/N ratio can improve in comparison with the case that it is made to attenuate only with Volume.

Display (※)	Total Gain [dB]	Volume [dB]	Fader [dB]
50	6	6	0
49	5	5	0
48	4	4	0
47	3	3	0
46	2	2	0
45	1	1	0
44	0	0	0
43	-1	-1	0
42	-2	-2	0
41	-3	-3	0
40	-4	-4	0
39	-5	-5	0
38	-6	-6	0
37	-7	-7	0
36	-8	-8	0
35	-9	-9	0
34	-10	-10	0
33	-11	-11	0
32	-12	-12	0
31	-13	-13	0
30	-14	-14	0
29	-15	-15	0
28	-16	-16	0
27	-17	-17	0
26	-18	-18	0

Display (※)	Total Gain [dB]	Volume [dB]	Fader [dB]
25	-19	-19	0
24	-20	-20	0
23	-21	-21	0
22	-22	-22	0
21	-23	-23	0
20	-24	-24	0
19	-26	-24	-2
18	-28	-24	-4
17	-30	-24	-6
16	-32	-24	-8
15	-34	-24	-10
14	-36	-24	-12
13	-38	-24	-14
12	-40	-24	-16
11	-42	-24	-18
10	-44	-24	-20
9	-46	-24	-22
8	-48	-24	-24
7	-50	-24	-26
6	-52	-24	-28
5	-54	-24	-30
4	-56	-24	-32
3	-58	-24	-34
2	-60	-24	-36
1	-62	-24	-38
0	-∞	Mute	Mute

Table 1. A decline by Volume is done by -24dB. It is adjusted with Fader after -24dB.
(※Display=SET VOLUME)

© 2013 ROHM Co., Ltd. All rights reserved.

Downloaded from Arrow.com.

※When a attenuate after -32dB is used with Volume, in case of use Subwoofer Input Selector = Input Selector (Select Address 02(hex), D3 = 1), Output level of OUTS1/S2 is attenuated 「 Volume – (-31dB) 」.

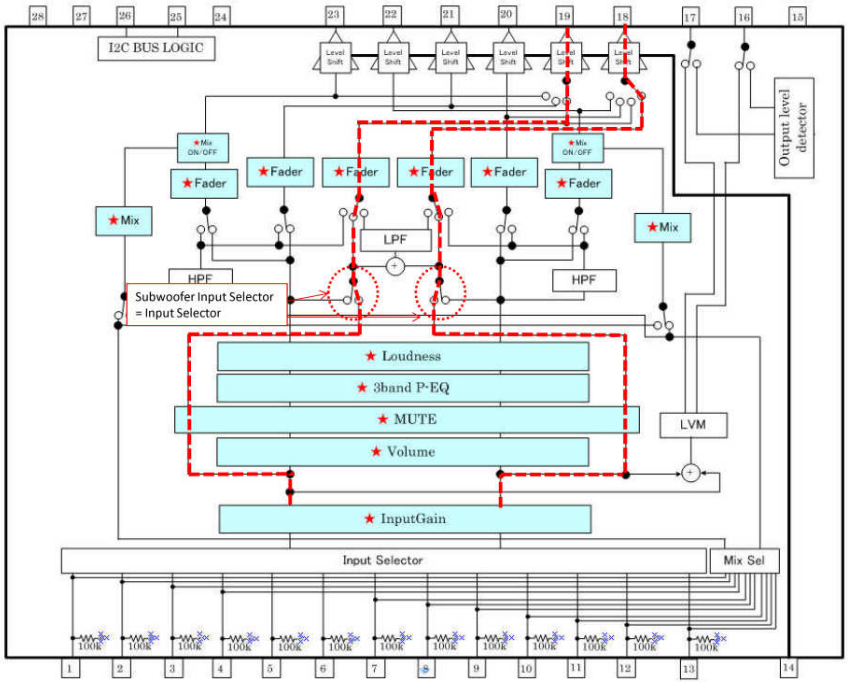

Figure 18. Subwoofer Input Selector = Input Selector (SelectAddress 02(hex), D3 = 1)

Volume [dB]	OUTS1/S2 [dB]	
Select Address 20(hex)	Subwoofer Input Selector=Loudness (Select Address 02(hex), D3=0)	Subwoofer Input Selector= Input Selector (Select Address 02(hex), D3=1)
6	6	0
5	5	0
4	4	0
3	3	0
2	2	0
1	1	0
0	0	0
-1	-1	0
-2	-2	0
-3	-3	0
-4	-4	0
-5	-5	0
-6	-6	0
-7	-7	0
-8	-8	0
-9	-9	0
-10	-10	0
-11	-11	0
-12	-12	0
-13	-13	0
-14	-14	0
-15	-15	0
-16	-16	0
-17	-17	0
-18	-18	0

Volume [dB]	OUTS1/S2 [dB]	
Select Address 20(hex)	Subwoofer Input Selector=Loudness (Select Address 02(hex), D3=0)	Subwoofer Input Selector= Input Selector (Select Address 02(hex), D3=1)
-19	-19	0
-20	-20	0
-21	-21	0
-22	-22	0
-23	-23	0
-24	-24	0
-26	-26	0
-28	-28	0
-30	-30	0
-32	-32	-1
-34	-34	-3
-36	-36	-5
-38	-38	-7
-40	-40	-9
-42	-42	-11
-44	-44	-13
-46	-46	-15
-48	-48	-17
-50	-50	-19
-52	-52	-21
-54	-54	-23
-56	-56	-25
-58	-58	-27
-60	-60	-29
-62	-62	-31

Table 2. Subwoofer Input Selector = Input Selector (Select Address 02(hex), D3 = 1)
Volume attenuation vs Output Level of OUTS1/S2

© 2013 ROHM Co., Ltd. All rights reserved.

Downloaded from Arrow.com.

About loudness

When Loudness is set up in on, signal level in fo (set up by (Select Address 03(hex), D3,D4))is attenuated) is made attenuated.
Therefore to make it put emphasis on the low and high band, use volume together

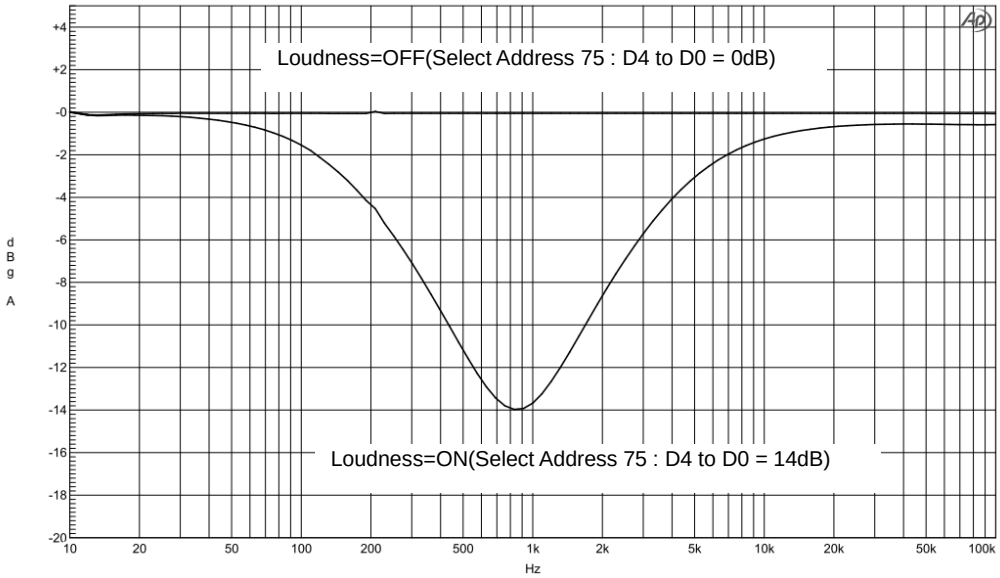

Figure 19. Loudness gain vs frequency (fo=800Hz)

Display (※)	Total Gain A [dB]	Total Gain B [dB]	Volume [dB]	Loudness [dB]	Fader [dB]
50	6	6	6	0	0
49	5	5	5	0	0
48	4	4	4	0	0
47	3	3	3	0	0
46	2	2	2	0	0
45	1	1	1	0	0
44	0	0	0	0	0
43	-1	-1	-1	0	0
42	-2	-2	-2	0	0
41	-3	-3	-3	0	0
40	-4	-4	-4	0	0
39	-5	-5	-5	0	0
38	-6	-6	-6	0	0
37	-7	-7	-7	0	0
36	-8	-8	-8	0	0
35	-9	-9	-9	0	0
34	-10	-10	-10	0	0
33	-10	-10	-10	-1	0
32	-10	-10	-10	-2	0
31	-10	-10	-10	-3	0
30	-10	-10	-10	-4	0
29	-10	-10	-10	-5	0
28	-10	-10	-10	-6	0
27	-10	-10	-10	-7	0
26	-10	-10	-10	-8	0

Display (※)	Total Gain A [dB]	Total Gain B [dB]	Volume [dB]	Loudness [dB]	Fader [dB]
25	-10	-19	-10	-9	0
24	-10	-20	-10	-10	0
23	-10	-21	-10	-11	0
22	-10	-22	-10	-12	0
21	-10-10	-23	-10	-13	0
20	-10	-24	-10	-14	0
19	-12	-26	-10	-14	-2
18	-14	-28	-10	-14	-4
17	-16	-30	-10	-14	-6
16	-18	-32	-10	-14	-8
15	-20	-34	-10	-14	-10
14	-22	-36	-10	-14	-12
13	-24	-38	-10	-14	-14
12	-26	-40	-10	-14	-16
11	-28	-42	-10	-14	-18
10	-30	-44	-10	-14	-20
9	-32	-46	-10	-14	-22
8	-34	-48	-10	-14	-24
7	-36	-50	-10	-14	-26
6	-38	-52	-10	-14	-28
5	-40	-54	-10	-14	-30
4	-42	-56	-10	-14	-32
3	-44	-58	-10	-14	-34
2	-46	-60	-10	-14	-36
1	-48	-62	-10	-14	-38
0	-∞	-∞	Mute	-14	Mute

Table 3. A decline by Volume is done by -24dB. It is adjusted with Fader after -24dB. Loudness=ON
(※Display=SET VOLUME)

© 2013 ROHM Co., Ltd. All rights reserved.

Downloaded from Arrow.com.

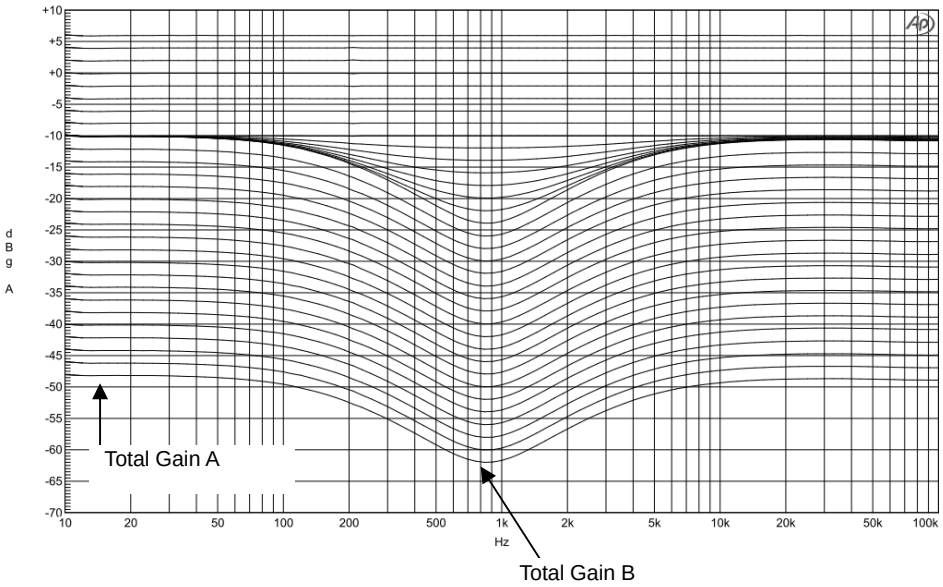

Figure 20. Gain vs frequency of Table.3

Attention about Loudness ON/OFF

To make it put emphasis on the low and high band, when it is made to boost with Volume so long as it was made to attenuate with Loudness.

・Loudness OFF →ON : Send data of loudness before volume
・Loudness ON →OFF : Send data of volume before loudness

※Transmit data in the above turn. A signal level declines first, and it is amplified after that. And so natural switching can be realized.

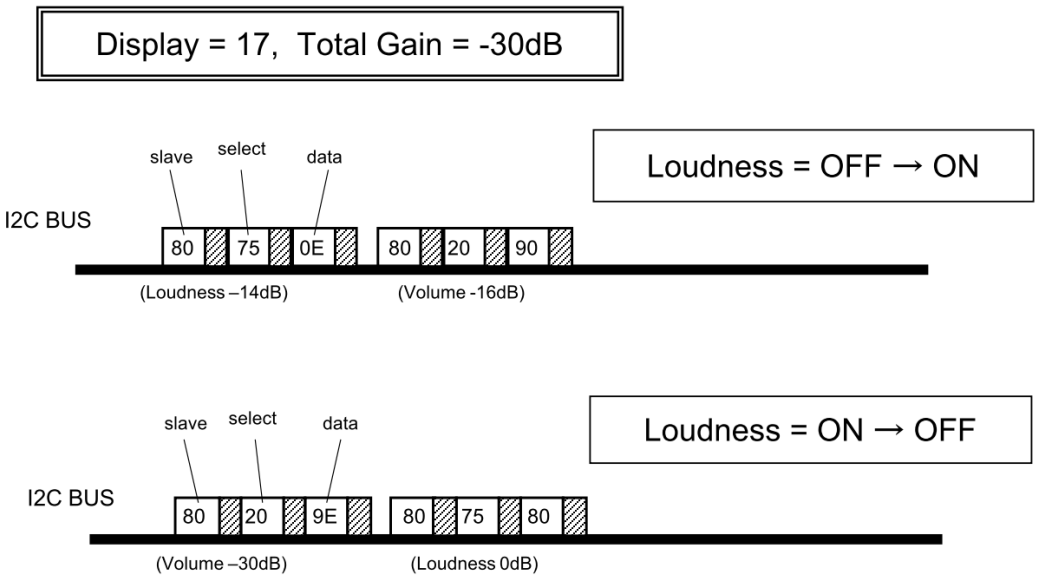

Figure 21. example of data sending about Loudness ON/OFF

© 2013 ROHM Co., Ltd. All rights reserved.

Downloaded from Arrow.com.

(6)About power on reset

At on of supply voltage circuit made initialization inside IC is built-in. Please send data to all address as initial data at supply voltage on. And please supply mute at set side until this initial data is sent.)

Item	Symbol	Limit			Unit	Condition
		Min.	Typ.	Max.		
Rise time of VCCL	Trise	33	—	—	usec	VCCL rise time from 0V to 5V)
VCCL voltage of release power on reset	Vpor	—	4.1	—	V	

(7)About external compulsory mute terminal

Mute is possible forcibly than the outside after input again department, by the setting of the MUTE terminal.

Mute Voltage Condition	Mode
GND to 1.0V	MUTE ON
2.3V to 5.0V	MUTE OFF

Establish the voltage of MUTE in the condition to have been defined.)

About OUT-terminal(18to23pin) vs. VCCL

Output voltage of OUT terminal(18to23pin) keep fixed voltage in operational range(VCCL=7.0Vto9.5V).

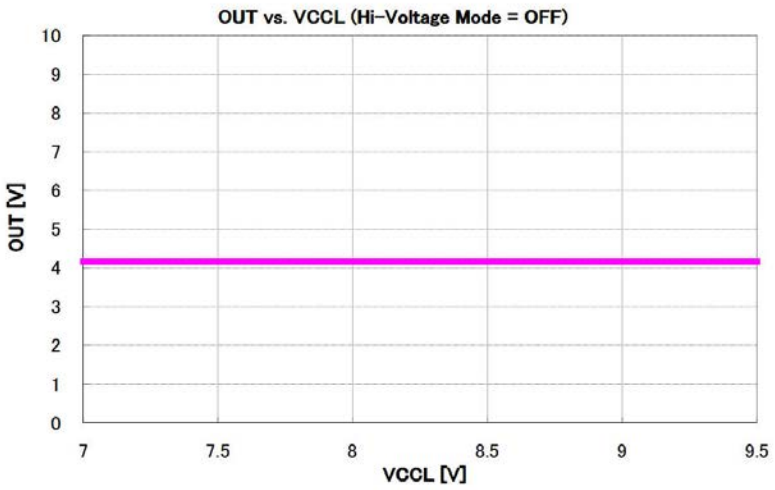

Figure 22. OUT(18 to 23pin)_DC-Bias = 4.15V fixed.(Hi-Voltage Mode = OFF)

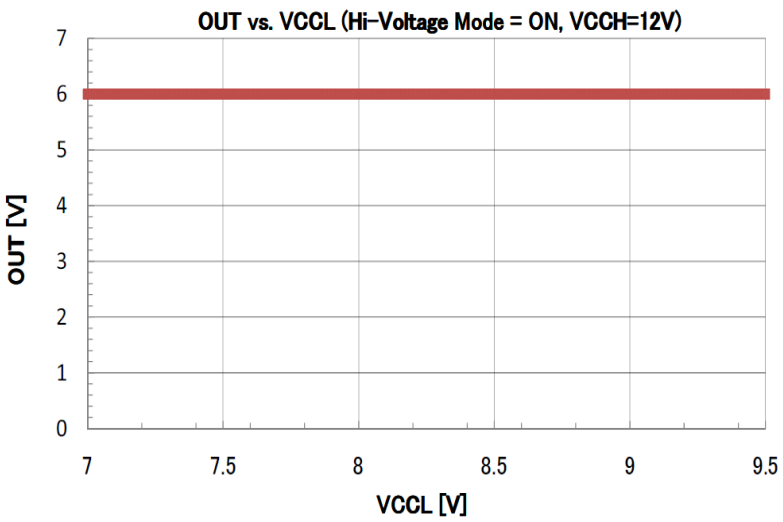

Figure 23. OUT(18 to 23pin)_DC-Bias = 6.0V fixed.(Hi-Voltage Mode = ON)

© 2013 ROHM Co., Ltd. All rights reserved.

Downloaded from Arrow.com.

About Advanced switching circuit

【1】About Advanced switch

1-1. Effect of Advanced switch

It is the ROHM original technology for prevention of switching noise. When gain switching such as volume and tone control is done momentarily, a music signal doesn't continue, and unpleasant shock noise is made. Advanced switch can reduce shock noise with the technology which signal wave shape is changed to gently so that a music signal may not continue drastically.

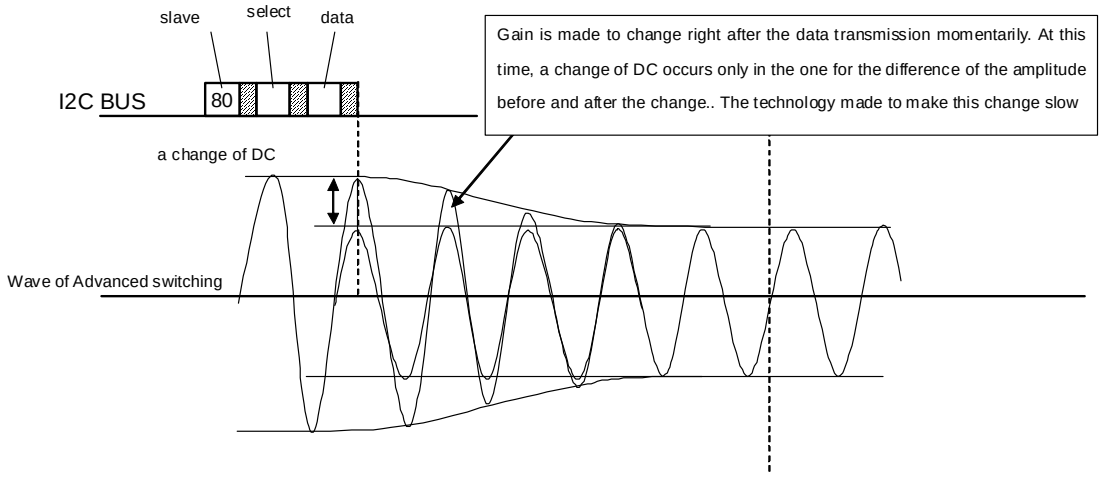

Advanced switch starts switching after the control data transmitted by a microcomputer are received. It takes one fixed time, and wave shape transits as the above figure. The data transmitted by a microcomputer are processed inside, and the most suitable movement is done inside the IC so that switching shock noise may not be made.)

But, it presumes by the transmitting timing when it doesn't become intended switching wave shape because it is the function which needs time. The example which relations with the switching time of the data transmitting timing and the reality were shown in is given to it in the following. It asks for design when it is confirmed well.

About a kind of transmission method

・A data setup (by the data format, the thing which isn't indicated by gray) except for the item for advanced switch
There is no regulation in transmission specially.

・The data setup (by the data format, the thing which gray indication is) of the item for advanced switch
Though there is no regulation in data transmission, the switching order when data are transmitted to several blocks follows the
next 2-3.

【2】About transmission DATA of advanced switching item

2-1. About switching time of advanced switch

advanced switch ON/ OFF is set up in ON to make advanced switch function effective.
And, though it becomes the same completely, the movement time of advanced switch can set up only MUTE in the independence.
As for these, set it up referring to select address 01(hex) of the data format.

There are transition time to be equivalent to the setup value, and treatment time (effect-less time) inside the IC in advanced switch. Therefore, actual switching time (Tsoft and Tsoft, MUTE) is defined as follows.

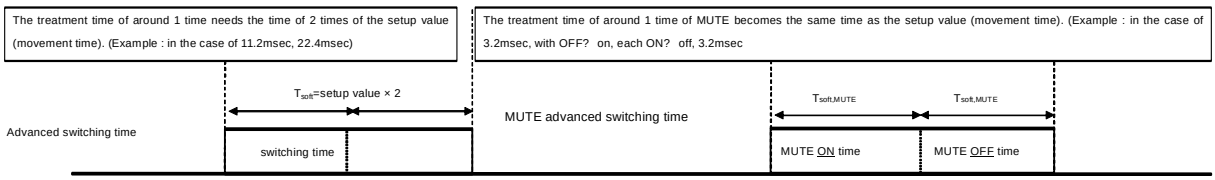

Setup value 11.2msec should be recommended in switch time of advanced switch. But, when a shock noise level during gain switching isn't sufficient, it has the possibility that it can be reduced by setting it up more this long on the actual use. But, be careful because an response in switching of around one time becomes slow when you lengthen time.

© 2013 ROHM Co., Ltd. All rights reserved.

Downloaded from Arrow.com.

2-2. About the data transmitting timing in same block state and the switching movement.

■ Transmitting example 1

A time chart to the switching start has become the next since the data transmission.
The interval of the same blocks is fully left, and the example when data are transmitted is shown first.
And, as for enough interval, it becomes the time when setup time was multiplied by the dispersion margin 1.4.

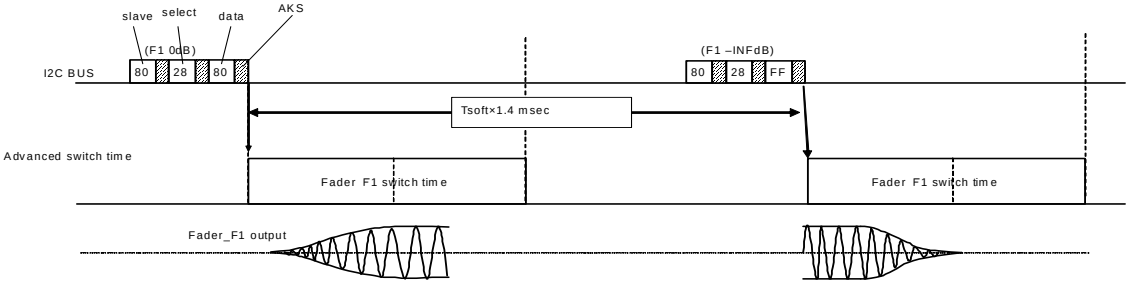

■ Transmitting example 2

Next, when a transmitting interval isn't sufficient, the example of (When it is shorter than the above interval.) is shown.
The next switching movement is started in succession after that movement is finished when data are transmitted during the first switching movement.

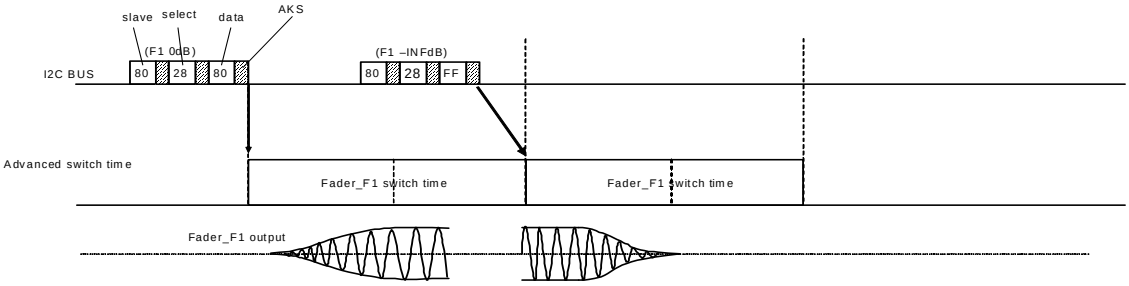

■ Transmitting example 3

Next, the example of the switching movement when a transmitting interval was shortened more is shown.
It has the buffer which memorizes data inside the IC, and a buffer always does transmitting data. But, data of +6dB which transmitted to the second become invalid with this example to hold only the latest data.

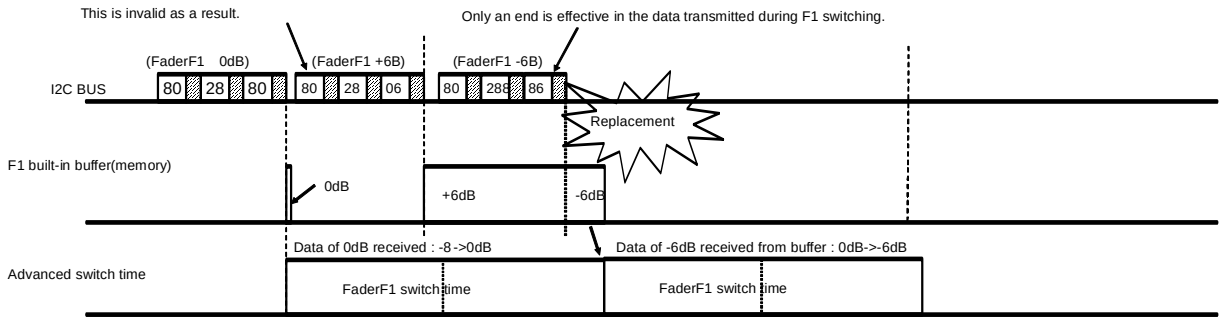

© 2013 ROHM Co., Ltd. All rights reserved.

Downloaded from Arrow.com.

■ Transmitting example 4

As for handling of refresh-data, advanced switch movement isn't started to judge for present setup data and a difference that to be inside the IC)

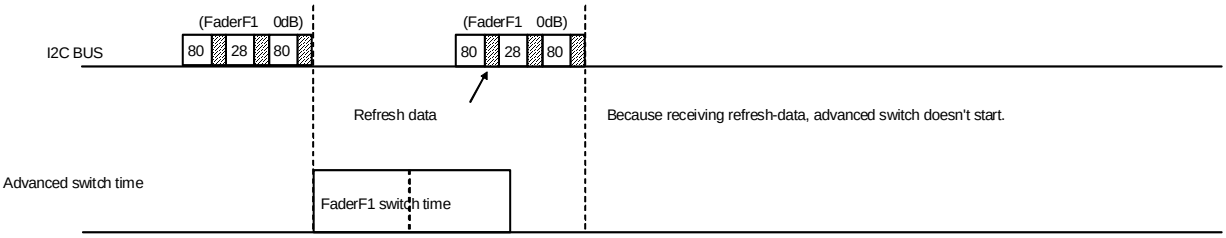

2-3. About the data transmitting timing in several block state and the switching movement.)

When data are transmitted to several blocks, treatment in the BS (block state) unit is carried out inside the IC. The movement start order of advanced switch is decided by BS in advance.)

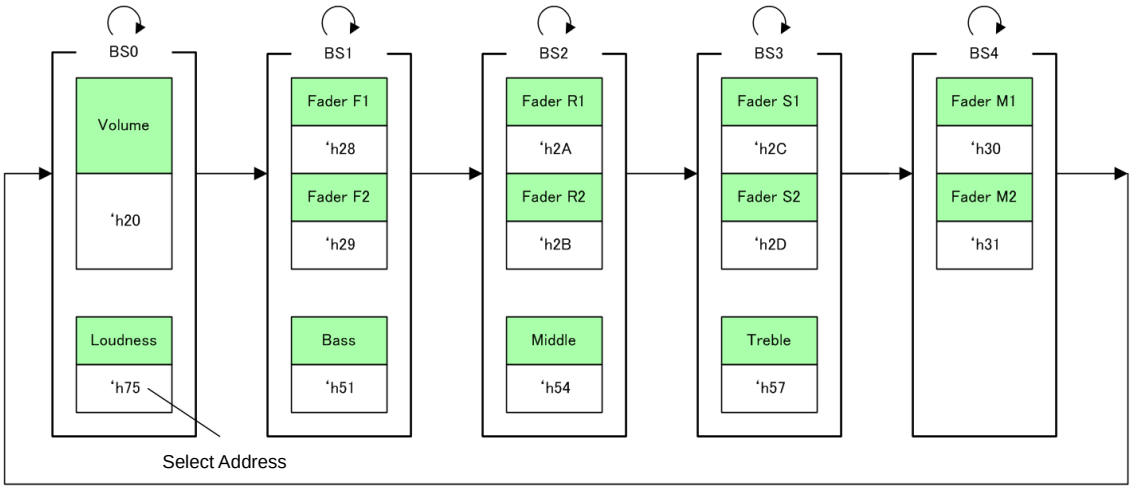

Figure 24. The order of advanced switch start

※It is possible in the block in the same BS that switching is started at the same timing.

■Transmitting example 5

The timing of the switching start follows the figure of the former page though there is no restriction of the I^2C BUS data transmitting timing as it explained in the former knot even if it is related to the transmission to several blocks.
Therefore, it isn't based on the data transmitting order, and an actual switching turn becomes the turn of the upper figure. (Transmitting example 6)
Each block data is being transmitted with the transmitting example 5 separately. But, it becomes the same result even if data are transmitted in bulk.)

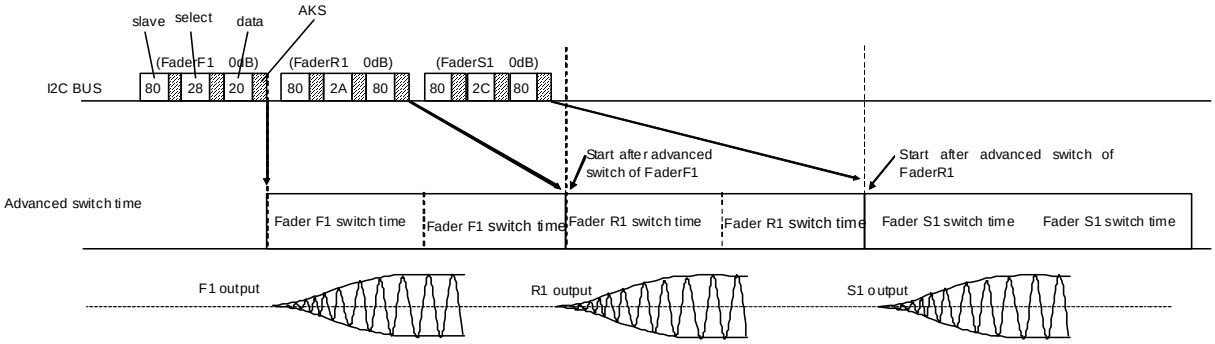

© 2013 ROHM Co., Ltd. All rights reserved.

Downloaded from Arrow.com.

■Transmitting example 6)

Switching of the next BS is done after the present switching completion when an actual switching order is different from the transmitting order, and data except for the same BS are transmitted at the timing when advanced switch movement isn't finished.)

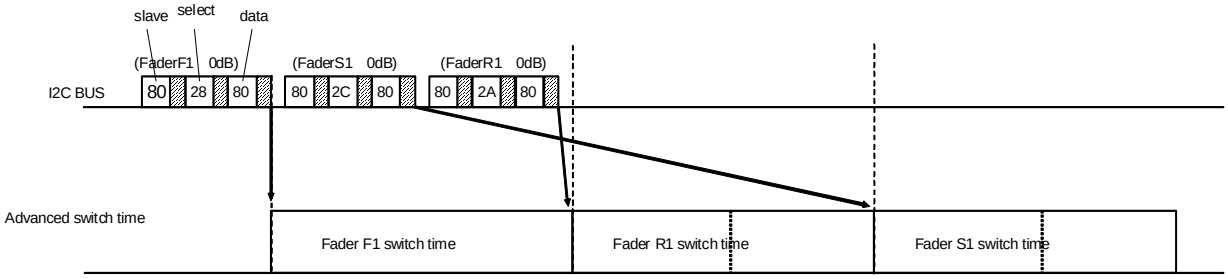

The case that the same BS3 and BS2 were transmitted during BS1 switching is shown with the next example. (Transmitting example 7)

■Transmitting example 7

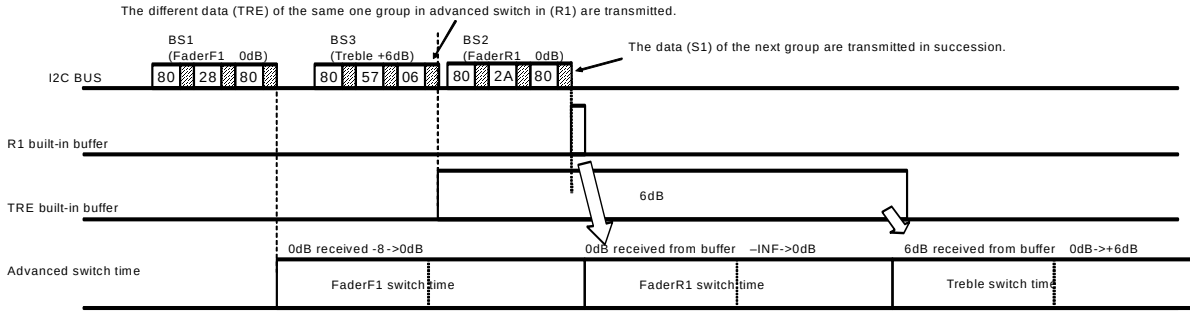

2-4.About Gain switch of TONE(Bass/Middle/Treble)

It becomes two-step transition movement that it passed through 0dB 【 Gain of Bass/Middle/Treble 】 to prevent the occurrence of the switching noise when Gain is changed from boost to the cut (or, from the cut, boost). And, when boost/cut doesn't change, it is the same as 【 2-2 】【 2-3 】. But, it is in the same way as other switching as advanced switch switching time.)

■Transmitting example 8

When it is changed Bass+15dB from Bass-15dB. (Initial : Bass -15dB)

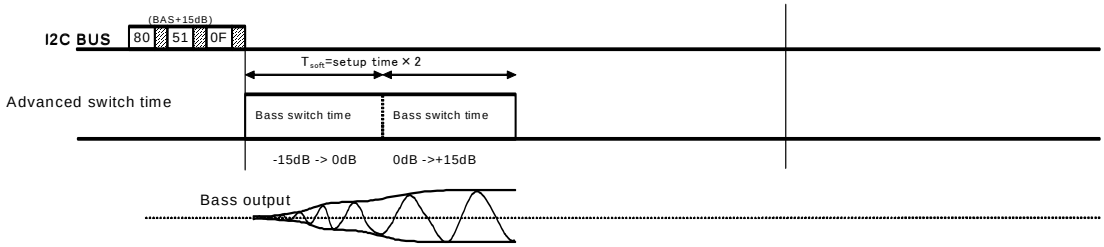

© 2013 ROHM Co., Ltd. All rights reserved.

Downloaded from Arrow.com.

【3】About advanced switch of MUTE

Advanced switch of MUTE is controllable independently of other advanced switch.
There is no regulation about the timing to which MUTE is applied, and the timing to cancel.

■Transmitting example 9 Normal MUTE ON/OFF

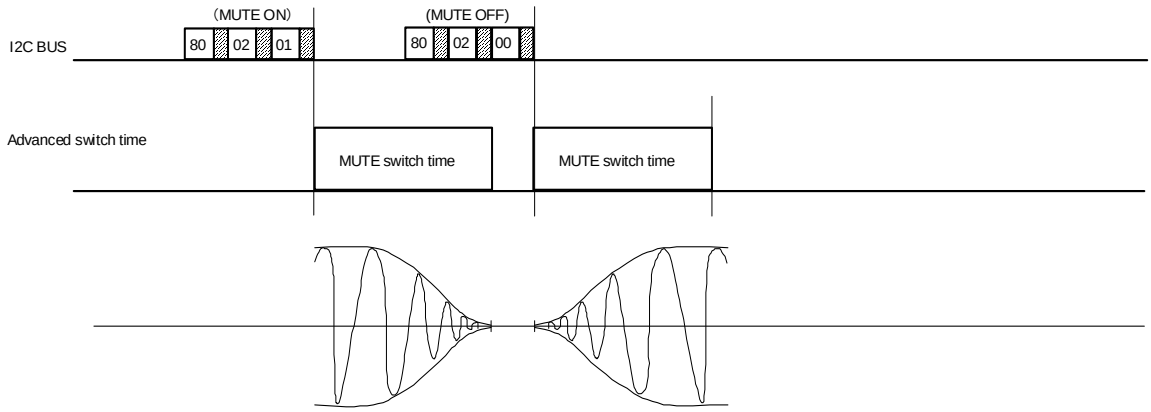

■Transmitting example 10 The movement when it was canceled earlier than advanced switch time of MUTE

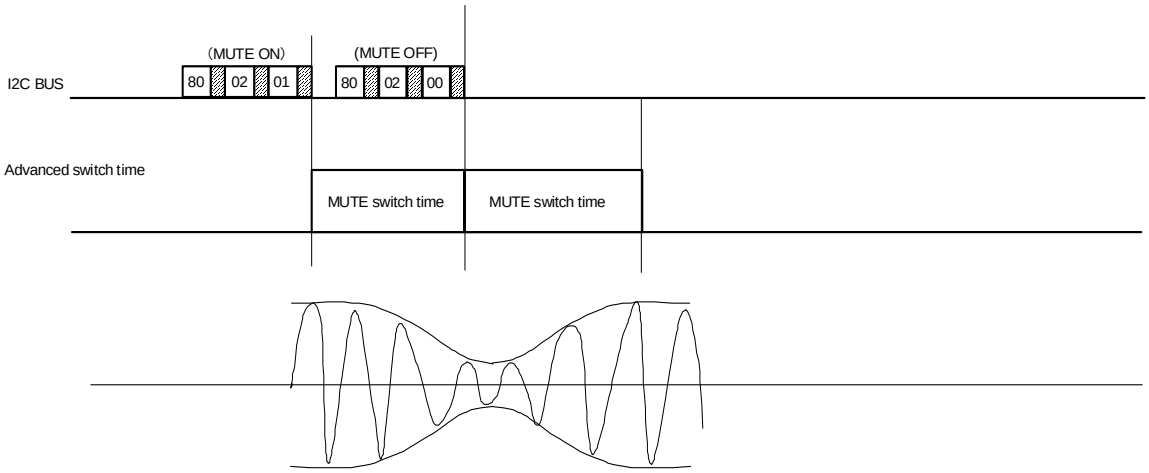

© 2013 ROHM Co., Ltd. All rights reserved.

Downloaded from Arrow.com.

■Advanced switch transmitting timing list

(1) 【 MUTE 】

	Stand-by advanced switch		working advanced switch
Data transfer timing	No constraint	⇨	No constraint
Operation start timing	After send data	⇦	After send data
Advanced switch time	T_{soft_MUTE} ※1		T_{soft_MUTE}

(2) 【 VOL/FAD(F1,F2,R1,R2,S1,S2)/MIX(M1,M2)/TONE(BAS,MID.TRE,LOUD) 】

	Stand-by advanced switch		working advanced switch
Data transfer timing	No constraint	⇨	No constraint
Operation start timing	After send data	⇦	After finished current work
Advanced switch time	T_{soft} ※2		T_{soft}

(3) 【 TONE BOOST ⇔ CUT 】

	Stand-by advanced switch		working advanced switch
Data transfer timing	No constraint	⇨	No constraint
Operation start timing	After send data	⇦	After finished current work
Advanced switch time	T_{soft} ※3		T_{soft}

※1 As for $T_{soft,MUTE}$, mentioned advanced switch of MUTE movement time is expressed to the data format. It is equivalent by the explanation in the body in one block.

※2 As for Tsoft, the time of two times of mentioned advanced movement time is expressed to the data format. It changes to block it in the same way by the explanation in the body by the continuance twice.

※3 About T_{soft} of TONE BOOST ⇔ CUT, advanced switch treatment time is in the same way as the switching time of the above (※2) though two times hang on the movement time because this movement comes to switch that it passes through 0dB automatically inside the IC.

© 2013 ROHM Co., Ltd. All rights reserved.

Downloaded from Arrow.com.

About Output level detector

<function>
Output level detector is circuit for detection whether output level of IC are into threshold level.

<specification>
You can select output of detection by “block selects (I^2C control)”.
When output level are into threshold level that selected by “Threshold level select (I^2C control)”,output level of OLD is “H”(3.3V).

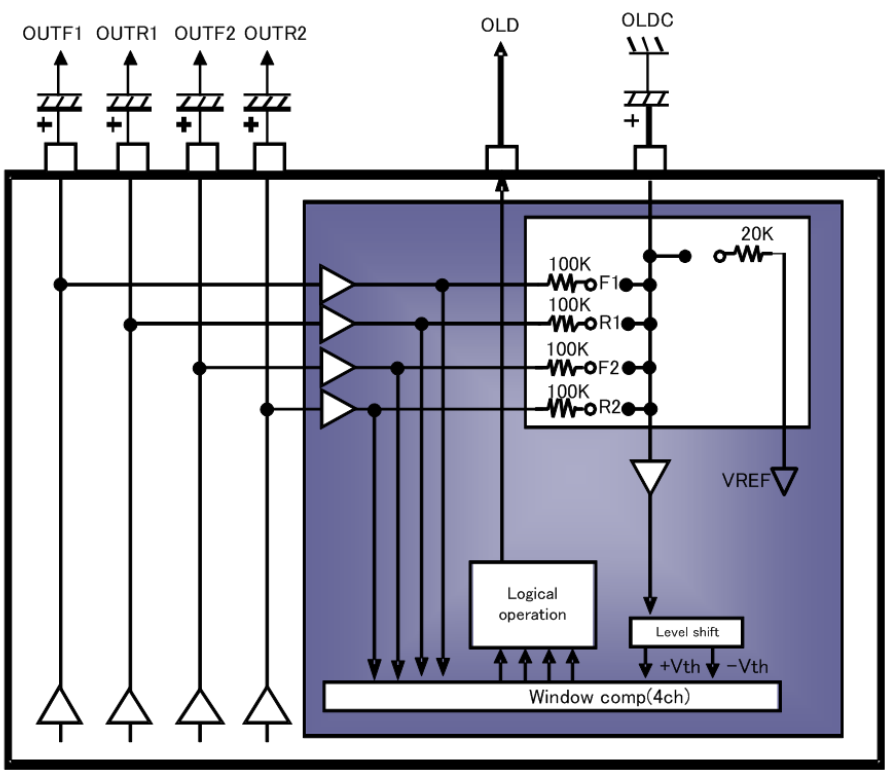

Figure 25. Block diagram of output level detector

Select address 90(hex)

Function Name	Mode	MSB			Output Level Detector				LSB
		D7	D6	D5	D4	D3	D2	D1	D0
OUT R2 ON/OFF	OFF								0
	ON								1
OUT R1 ON/OFF	OFF							0	
	ON							1	
OUT F2 ON/OFF	OFF						0		
	ON						1		
OUT F1 ON/OFF	OFF					0			
	ON					1			
Threshold Level Select	±30mV			0	0				
	±45mV			0	1				
	±60mV			1	0				
	±75mV			1	1				

Please set Select Address 90(hex), D3toD0=0,0,0,0 at Output Level Detector OFF.

$C_{OLD} = C1 \times Zin / R_{OLD}$
C1 : Coupling capacitance between output of BD37034FV-M and input of power-amp.
Zin : Input impedance of power-amp
R_{OLD} : Input impedance of OLDC-port
Select Address 90(hex) Input impedance is 20kΩ at Output level detector OFF(Select Address 90(hex) D3toD0=0,0,0,0).

© 2013 ROHM Co., Ltd. All rights reserved.

Downloaded from Arrow.com.

Application Circuit Diagram

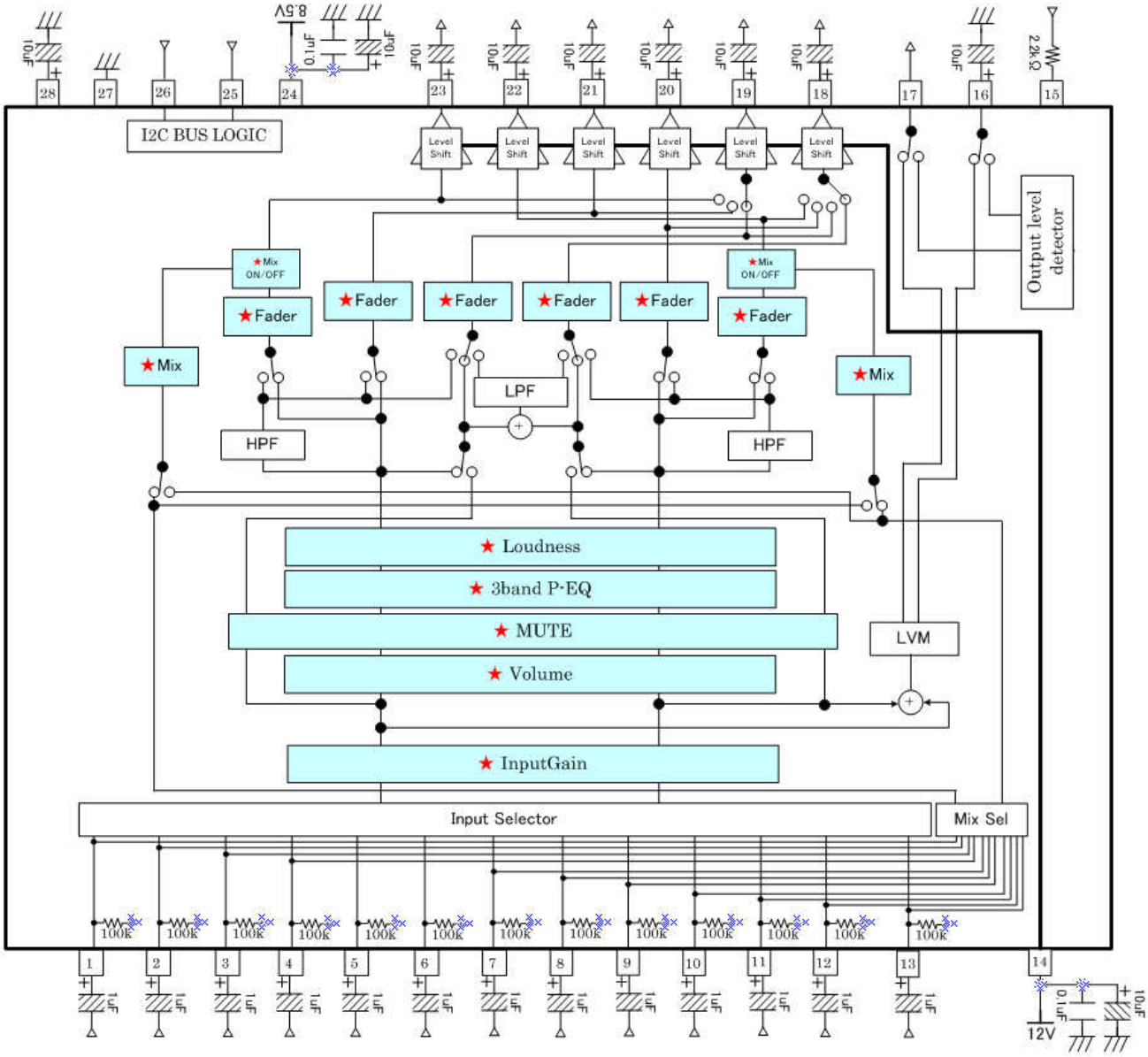

Figure 26. Application Circuit Diagram

Unit
R : [Ω]
C : [F]

Notes on wiring

① Please connect the decoupling capacitor of a power supply in the shortest distance as much as possible to GND.
② Lines of GND shall be one-point connected.
③ Wiring pattern of Digital shall be away from that of analog unit and cross-talk shall not be acceptable.
④ Lines of SCL and SDA of I^2C BUS shall not be parallel if possible. The lines shall be shielded, if they are adjacent to each other.
⑤ Lines of analog input shall not be parallel if possible. The lines shall be shielded, if they are adjacent to each other.

© 2013 ROHM Co., Ltd. All rights reserved.

Downloaded from Arrow.com.

Thermal Derating Curve

About the thermal design by the IC
Characteristics of an IC have a great deal to do with the temperature at which it is used, and exceeding absolute maximum ratings may degrade and destroy elements. Careful consideration must be given to the heat of the IC from the two standpoints of immediate damage and long-term reliability of operation.

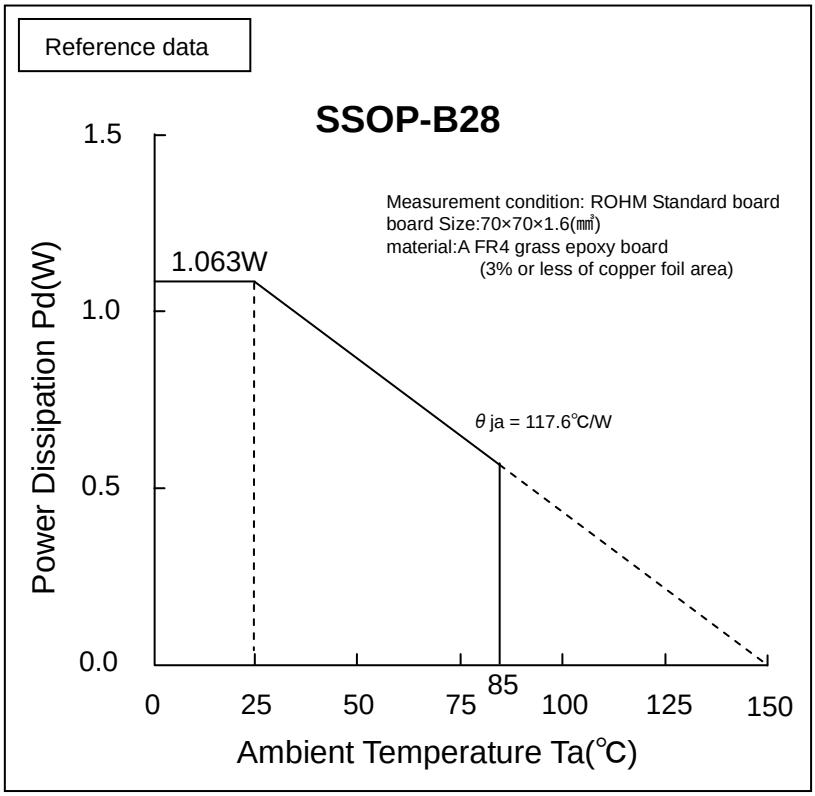

Figure 27. Temperature Derating Curve

Note) Values are actual measurements and are not guaranteed.

Power dissipation values vary according to the board on which the IC is mounted.

© 2013 ROHM Co., Ltd. All rights reserved.

Downloaded from Arrow.com.

Terminal Equivalent Circuit and Description

Terminal No.	Terminal Name	Terminal Voltage	Equivalent Circuit	Terminal Description
1 2 3 4 5 6	A1 A2 B1 B2 C1 C2	4.15	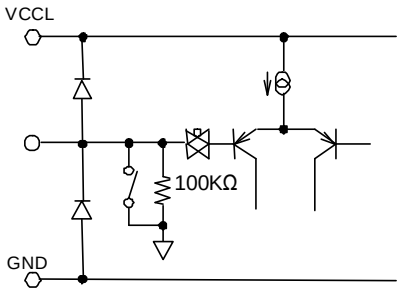	A terminal for signal input. The input impedance is 100kΩ(typ).
7 8 9 10 11 13	DP1 DN DP2 EP1 EN1 EP2	4.15	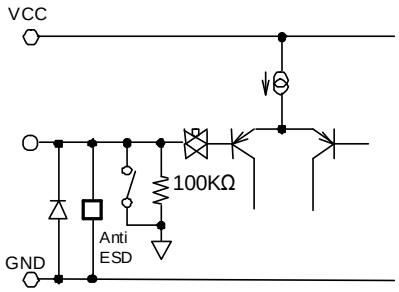	A terminal for signal input. The input impedance is 100kΩ(typ).
12	MIN EN2	4.15	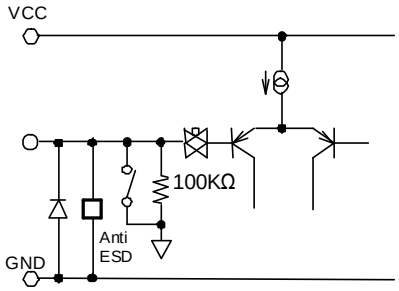	A terminal for signal input. The input impedance is 100kΩ(typ).
15	MUTE	–	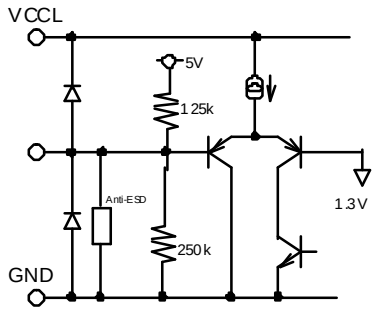	A terminal for external compulsory mute. If terminal voltage is High level, the mute is off. And if the terminal voltage is Low level, the mute is on.
18 19 20 21 22 23	OUTS2 OUTS1 OUTR2 OUTR1 OUTF2 OUTF1	4.15/6.0 HiVoltage =OFF/ON	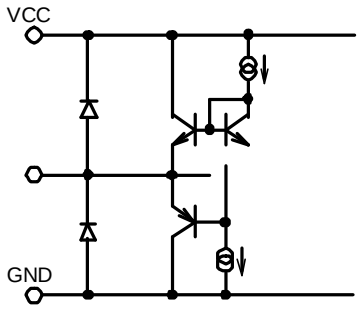	A terminal for fader and Subwoofer output.

The figure in the pin explanation and input/output equivalent circuit is reference value, it doesn't guarantee the value.

© 2013 ROHM Co., Ltd. All rights reserved.

Downloaded from Arrow.com.

Terminal No.	Terminal Name	Terminal Voltage	Equivalent Circuit	Terminal Description
25	SCL	–	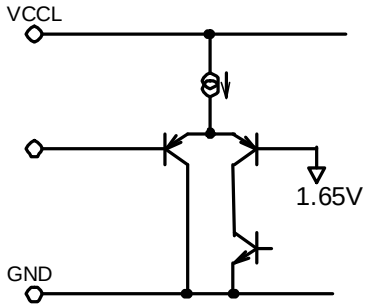	A terminal for clock input of I^2C BUS communication.
26	SDA	–	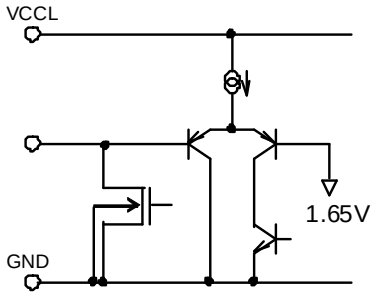	A terminal for data input of I^2C BUS communication.
28	VREF	4.15	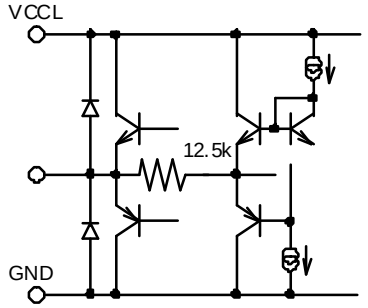	Voltage for reference bias of analog signal system. The simple pre-charge circuit and simple discharge circuit for an external capacitor are built in.
24 14	VCCL VCCH	8.5 8.5/12		Power supply terminal.
27	GND	0		Ground terminal.

The figure in the pin explanation and input/output equivalent circuit is reference value, it doesn't guarantee the value.

© 2013 ROHM Co., Ltd. All rights reserved.

Downloaded from Arrow.com.

Terminal No.	Terminal Name	Terminal Voltage	Equivalent Circuit	Terminal Description
16	LRST	–	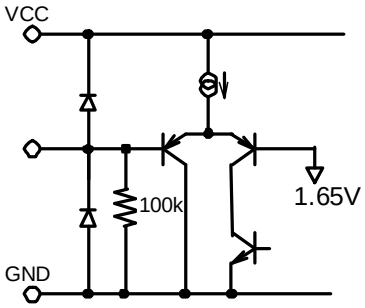	A terminal for level meter reset. If terminal voltage is High level, the reset is on. And if the terminal voltage is Low level, the reset is off.
	OLDC	4.15/ 4.73 HiVoltage =OFF/ON	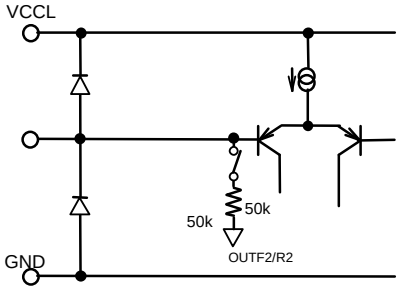	A terminal for filter of output level detector. Input impedance is 25k(OUTF/R both ON) or 50kΩ(OUTF/R either ON) at Output level detector ON, 20kΩ at Output level detector OFF.
17	LOUT		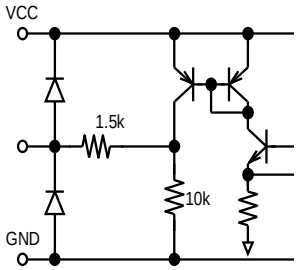	A terminal for Level meter output.
	OLD	0 3.3	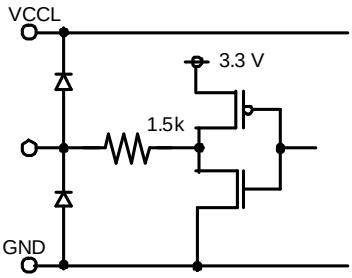	A terminal for output of output level detector.

The figure in the pin explanation and input/output equivalent circuit is reference value, it doesn't guarantee the value.

© 2013 ROHM Co., Ltd. All rights reserved.

Downloaded from Arrow.com.

Notes for use

1.Absolute maximum rating voltage

When it impressed the voltage on VCC more than the absolute maximum rating voltage, circuit currents increase rapidly, and there is absolutely a case to reach characteristic deterioration and destruction of a device. In particular in a serge examination of a set, when it is expected the impressing serge at VCC terminal (14,24pin), please do not impress the large and over the absolute maximum rating voltage (including a operating voltage + serge ingredient (around 14V))

2.About a signal input part

1)In the signal input terminal, the constant setting of input coupling capacitor C(F) be sufficient input impedance R_{IN}(Ω) inside IC and please decide. The first HPF characteristic of RC is composed.

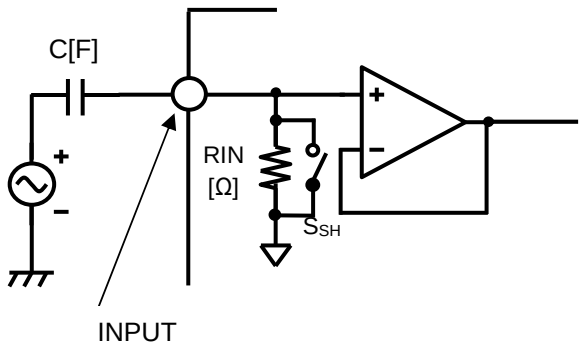

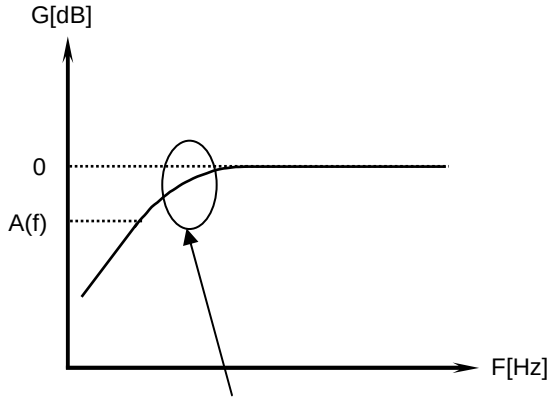

$$A(f) = \sqrt{\frac{(2\pi fCR_{IN})^2}{1+(2\pi fCR_{IN})^2}}$$

2) SHORT mode is the command which makes switch S_{SH} =ON an input selector part and input impedance RIN of all terminals, and makes resistance small. Switch S_{SH} is OFF when not choosing a SHORT command.
A constant time becomes small at the time of this command twisting to the resistance inside the capacitor connected outside and LSI. The charge time of a capacitor becomes short. Since SHORT mode turns ON the switch of S_{SH} and makes it low impedance, please use it at the time of a non-signal.

3.About Mute terminal(15pin) when power supply is off

Any voltage shall not be supplied to Mute terminal (15pin) when power-supply is off.
Please insert a resistor (about 2.2kΩ) to Mute terminal in series, if voltage is supplied to mute terminal in case.
(Please refer Application Circuit Diagram.)

4. About Hi-Voltage function

About Logic of Hi-Voltage function is follow as.

Hi-Voltage ON/OFF

Hivoltage ON/OFF(Select Address 01hex, D2)	0	0	1	1	-
Level Shift(Select Address 01hex, D3)	0	1	0	1	-
Level of amplification in the output-unit	0	3	6	6	[dB]
Bias-voltage in the output-unit	4.15	4.15	6	6	[V]

Hi-Voltage ON

- Though the level of amplification in the output-unit is controlled with Level Shift (Select Address 01hex, D3), it becomes a +6dB fixation under the condition of Hi-Voltage function is ON.
- Under the condition of Hi-Voltage function is OFF, 0dB/+3dB switching is possible by the setup of Level Shift.
- Under the condition of Hi-Voltage function is OFF, bias-voltage is 4.15V regardless of the setup of Level Shift.
- The use of the external MUTE on the set side is recommended because shock noise by the DC step is made when ON/OFF switching of the Hi-Voltage function is done.
- The initial condition of Hi-Voltage function is Hi-Voltage=ON after a power supply is started)

© 2013 ROHM Co., Ltd. All rights reserved.

Downloaded from Arrow.com.

Ordering Information

B	D	3	7	0	3	4	F	V	ME 2

- Part Number
- Package
  FV: SSOP-B28
- Packaging and forming specification
  E2: Embossed tape and reel
  (SSOP-B28)

Physical Dimension Tape and Reel Information

SSOP-B28

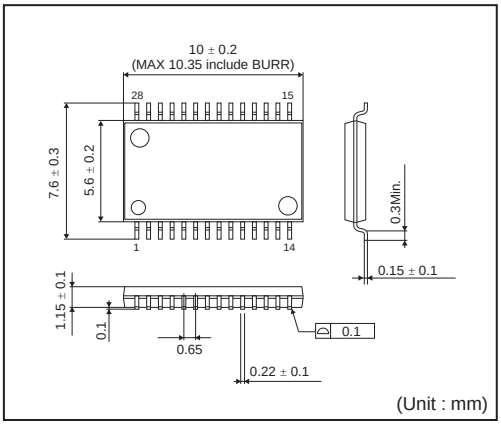

<Tape and Reel information>

Tape	Embossed carrier tape
Quantity	2000pcs
Direction of feed	E2 (The direction is the 1pin of product is at the upper left when you hold reel on the left hand and you pull out the tape on the right hand)

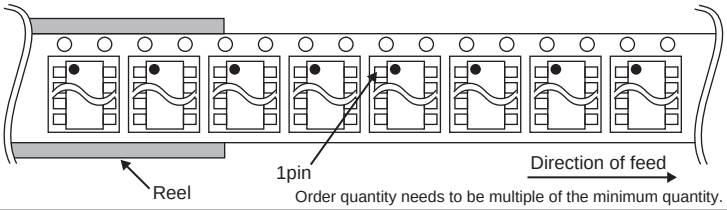

Order quantity needs to be multiple of the minimum quantity.

Marking Diagram(s)(TOP VIEW)

SSOP-B28(TOP VIEW)

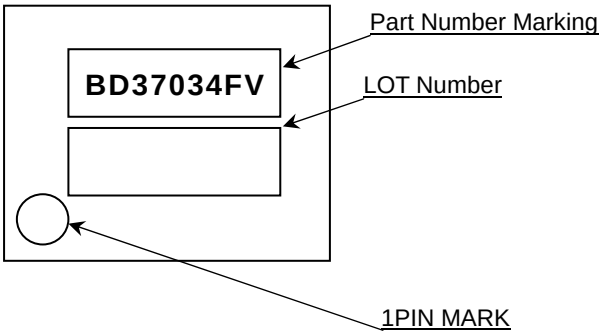

© 2013 ROHM Co., Ltd. All rights reserved.

Downloaded from Arrow.com.

Revision history

Date	Revision	Changes
3.APR.2013	001	New Release

Date	Revision	Changes
4.OCT.2013	002	All page ● delete
4.OCT.2013	002	Page 2 < Sub Title> Sound Processors for Car Audios ⇒ Analog Audio Processors series change. <Feature> AEC-Q100 Qualified add. <Logo> PbFree, RoHS delete
4.OCT.2013	002	Page 3 Power Dissipation mW ⇒ W change.
4.OCT.2013	002	Page 43 Ordering Information, E2 ⇒ ME2 change.

© 2013 ROHM Co., Ltd. All rights reserved.

Downloaded from Arrow.com.

Notice

Precaution on using ROHM Products

1. If you intend to use our Products in devices requiring extremely high reliability (such as medical equipment (Note 1), aircraft/spacecraft, nuclear power controllers, etc.) and whose malfunction or failure may cause loss of human life, bodily injury or serious damage to property ("Specific Applications"), please consult with the ROHM sales representative in advance. Unless otherwise agreed in writing by ROHM in advance, ROHM shall not be in any way responsible or liable for any damages, expenses or losses incurred by you or third parties arising from the use of any ROHM's Products for Specific Applications.

(Note1) Medical Equipment Classification of the Specific Applications

JAPAN	USA	EU	CHINA
CLASSⅢ	CLASSⅢ	CLASSⅡb	CLASSⅢ
CLASSⅣ		CLASSⅢ	

2. ROHM designs and manufactures its Products subject to strict quality control system. However, semiconductor products can fail or malfunction at a certain rate. Please be sure to implement, at your own responsibilities, adequate safety measures including but not limited to fail-safe design against the physical injury, damage to any property, which a failure or malfunction of our Products may cause. The following are examples of safety measures:
   [a] Installation of protection circuits or other protective devices to improve system safety
   [b] Installation of redundant circuits to reduce the impact of single or multiple circuit failure

3. Our Products are not designed under any special or extraordinary environments or conditions, as exemplified below. Accordingly, ROHM shall not be in any way responsible or liable for any damages, expenses or losses arising from the use of any ROHM's Products under any special or extraordinary environments or conditions. If you intend to use our Products under any special or extraordinary environments or conditions (as exemplified below), your independent verification and confirmation of product performance, reliability, etc, prior to use, must be necessary:
   [a] Use of our Products in any types of liquid, including water, oils, chemicals, and organic solvents
   [b] Use of our Products outdoors or in places where the Products are exposed to direct sunlight or dust
   [c] Use of our Products in places where the Products are exposed to sea wind or corrosive gases, including Cl_2, H_2S, NH_3, SO_2, and NO_2
   [d] Use of our Products in places where the Products are exposed to static electricity or electromagnetic waves
   [e] Use of our Products in proximity to heat-producing components, plastic cords, or other flammable items
   [f] Sealing or coating our Products with resin or other coating materials
   [g] Use of our Products without cleaning residue of flux (even if you use no-clean type fluxes, cleaning residue of flux is recommended); or Washing our Products by using water or water-soluble cleaning agents for cleaning residue after soldering
   [h] Use of the Products in places subject to dew condensation

4. The Products are not subject to radiation-proof design.

5. Please verify and confirm characteristics of the final or mounted products in using the Products.

6. In particular, if a transient load (a large amount of load applied in a short period of time, such as pulse. is applied, confirmation of performance characteristics after on-board mounting is strongly recommended. Avoid applying power exceeding normal rated power; exceeding the power rating under steady-state loading condition may negatively affect product performance and reliability.

7. De-rate Power Dissipation (Pd) depending on Ambient temperature (Ta). When used in sealed area, confirm the actual ambient temperature.

8. Confirm that operation temperature is within the specified range described in the product specification.

9. ROHM shall not be in any way responsible or liable for failure induced under deviant condition from what is defined in this document.

Precaution for Mounting / Circuit board design

1. When a highly active halogenous (chlorine, bromine, etc.) flux is used, the residue of flux may negatively affect product performance and reliability.

2. In principle, the reflow soldering method must be used; if flow soldering method is preferred, please consult with the ROHM representative in advance.

For details, please refer to ROHM Mounting specification

© 2014 ROHM Co., Ltd. All rights reserved.

Downloaded from Arrow.com.

Precautions Regarding Application Examples and External Circuits

1. If change is made to the constant of an external circuit, please allow a sufficient margin considering variations of the characteristics of the Products and external components, including transient characteristics, as well as static characteristics.

2. You agree that application notes, reference designs, and associated data and information contained in this document are presented only as guidance for Products use. Therefore, in case you use such information, you are solely responsible for it and you must exercise your own independent verification and judgment in the use of such information contained in this document. ROHM shall not be in any way responsible or liable for any damages, expenses or losses incurred by you or third parties arising from the use of such information.

Precaution for Electrostatic

This Product is electrostatic sensitive product, which may be damaged due to electrostatic discharge. Please take proper caution in your manufacturing process and storage so that voltage exceeding the Products maximum rating will not be applied to Products. Please take special care under dry condition (e.g. Grounding of human body / equipment / solder iron, isolation from charged objects, setting of Ionizer, friction prevention and temperature / humidity control).

Precaution for Storage / Transportation

1. Product performance and soldered connections may deteriorate if the Products are stored in the places where:
   [a] the Products are exposed to sea winds or corrosive gases, including Cl2, H2S, NH3, SO2, and NO2
   [b] the temperature or humidity exceeds those recommended by ROHM
   [c] the Products are exposed to direct sunshine or condensation
   [d] the Products are exposed to high Electrostatic

2. Even under ROHM recommended storage condition, solderability of products out of recommended storage time period may be degraded. It is strongly recommended to confirm solderability before using Products of which storage time is exceeding the recommended storage time period.

3. Store / transport cartons in the correct direction, which is indicated on a carton with a symbol. Otherwise bent leads may occur due to excessive stress applied when dropping of a carton.

4. Use Products within the specified time after opening a humidity barrier bag. Baking is required before using Products of which storage time is exceeding the recommended storage time period.

Precaution for Product Label

QR code printed on ROHM Products label is for ROHM's internal use only.

Precaution for Disposition

When disposing Products please dispose them properly using an authorized industry waste company.

Precaution for Foreign Exchange and Foreign Trade act

Since our Products might fall under controlled goods prescribed by the applicable foreign exchange and foreign trade act, please consult with ROHM representative in case of export.

Precaution Regarding Intellectual Property Rights

1. All information and data including but not limited to application example contained in this document is for reference only. ROHM does not warrant that foregoing information or data will not infringe any intellectual property rights or any other rights of any third party regarding such information or data. ROHM shall not be in any way responsible or liable for infringement of any intellectual property rights or other damages arising from use of such information or data.:

2. No license, expressly or implied, is granted hereby under any intellectual property rights or other rights of ROHM or any third parties with respect to the information contained in this document.

Other Precaution

1. This document may not be reprinted or reproduced, in whole or in part, without prior written consent of ROHM.

2. The Products may not be disassembled, converted, modified, reproduced or otherwise changed without prior written consent of ROHM.

3. In no event shall you use in any way whatsoever the Products and the related technical information contained in the Products or this document for any military purposes, including but not limited to, the development of mass-destruction weapons.

4. The proper names of companies or products described in this document are trademarks or registered trademarks of ROHM, its affiliated companies or third parties.

© 2014 ROHM Co., Ltd. All rights reserved.

Downloaded from Arrow.com.

General Precaution

1. Before you use our Products, you are requested to carefully read this document and fully understand its contents. ROHM shall not be in any way responsible or liable for failure, malfunction or accident arising from the use of any ROHM's Products against warning, caution or note contained in this document.

2. All information contained in this document is current as of the issuing date and subject to change without any prior notice. Before purchasing or using ROHM's Products, please confirm the latest information with a ROHM sales representative.

3. The information contained in this document is provided on an "as is" basis and ROHM does not warrant that all information contained in this document is accurate and/or error-free. ROHM shall not be in any way responsible or liable for any damages, expenses or losses incurred by you or third parties resulting from inaccuracy or errors of or concerning such information.

© 2014 ROHM Co., Ltd. All rights reserved.

Downloaded from Arrow.com.