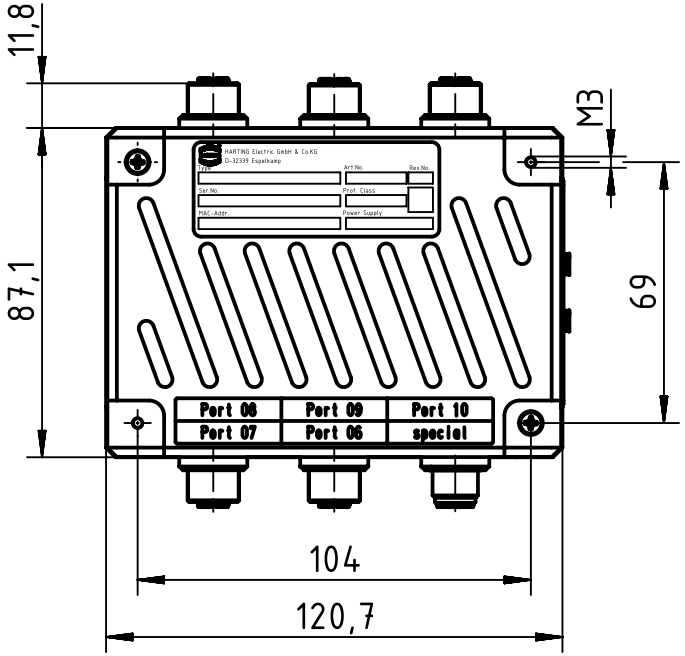

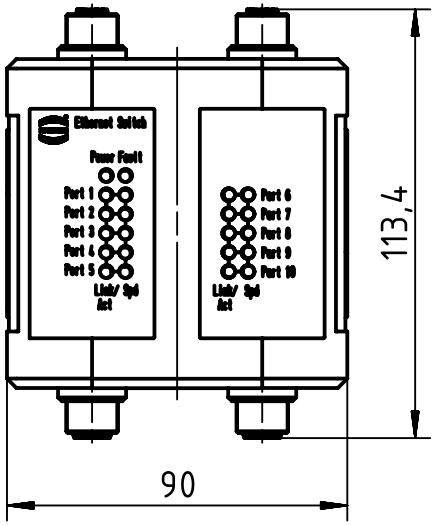

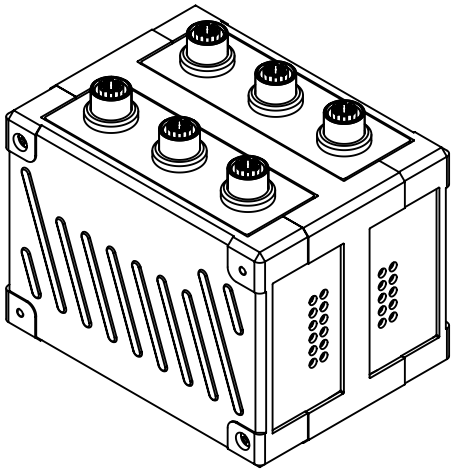

All Dimensions in mm Original Size DIN A4	Scale 1:2	Free size tol.		Ref. Sub. TB 20 70 310 4945 v. 29.01.09	
All rights reserved Department EL PD - DE	Created by ILJIN	Inspected by LOETKEMANN	Standardisation TIEMANNA	Date 2013-07-30	State Final Release
HARTING Electric GmbH & Co. KG D-32339 Espelkamp	Title Ha-VIS mCon 7100-B1V				Doc-Key / ECM-Nr. 100172104/UGD/004/A 500000064671
	Type TB	Number 20 70 310 4945		Rev. A	Page 1/1

A4

Downloaded from Arrow.com.