IRFF9230
JANTX2N6851
JANTXV2N6851
JANS2N6851

IOR HiRel
An Infineon Technologies Company

REPETITIVE AVALANCHE AND dv/dt RATED HEXFET® TRANSISTORS THRU-HOLE TO-205AF (TO-39)

200V, P-CHANNEL
REF: MIL-PRF-19500/564

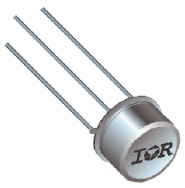

TO-39

Product Summary

Part Number	BVDSS	RDS(on)	I_D
IRFF9230	-200V	0.80Ω	-4.0A

Description

The HEXFET® technology is the key to International Rectifier's HiRel advanced line of power MOSFET transistors. The efficient geometry and unique processing of this latest "State of the Art" design achieves: very low on state resistance combined with high trans conductance.

The HEXFET transistors also feature all of the well established advantages of MOSFETs such as voltage control, very fast switching and temperature stability of the electrical parameters.

They are well suited for applications such as switching power supplies, motor controls, inverters, choppers, audio amplifiers and high energy pulse circuits.

Features

- Repetitive Avalanche Ratings
- Dynamic dv/dt Rating
- Hermetically Sealed
- Simple Drive Requirements
- ESD Rating: Class 1C per MIL-STD-750, Method 1020

Absolute Maximum Ratings

Symbol	Parameter	Value	Units
I_{D1} @ V_{GS} = -10V, T_C = 25°C	Continuous Drain Current	-4.0	A
I_{D2} @ V_{GS} = -10V, T_C = 100°C	Continuous Drain Current	-2.4	
I_{DM} @ T_C = 25°C	Pulsed Drain Current ①	-16	
P_D @ T_C = 25°C	Maximum Power Dissipation	25	W
	Linear Derating Factor	0.20	W/°C
V_{GS}	Gate-to-Source Voltage	± 20	V
E_{AS}	Single Pulse Avalanche Energy ②	75	mJ
I_{AR}	Avalanche Current ①	-4.0	A
E_{AR}	Repetitive Avalanche Energy ①	2.5	mJ
dv/dt	Peak Diode Recovery dv/dt ③	-5.0	V/ns
T_J T_{STG}	Operating Junction and Storage Temperature Range	-55 to + 150	°C
	Lead Temperature	300 (0.063 in. /1.6 mm from case for 10s)	
	Weight	0.98 (Typical)	g

For Footnotes, refer to the page 2.

Downloaded from Arrow.com.

Electrical Characteristics @ Tj = 25°C (Unless Otherwise Specified)

Symbol	Parameter	Min.	Typ.	Max.	Units	Test Conditions
BV_{DSS}	Drain-to-Source Breakdown Voltage	-200	—	—	V	V_{GS} = 0V, I_D = -1.0mA
$\Delta BV_{DSS}/\Delta T_J$	Breakdown Voltage Temp. Coefficient	—	-0.22	—	V/°C	Reference to 25°C, I_D = -1.0mA
$R_{DS(on)}$	Static Drain-to-Source On-Resistance	—	—	0.80	Ω	V_{GS} = -10V, I_{D2} = -2.4A ④
		—	—	0.83		V_{GS} = -10V, I_{D1} = -4.0A ④
$V_{GS(th)}$	Gate Threshold Voltage	-2.0	—	-4.0	V	V_{DS} = V_{GS}, I_D = -250µA
I_{DSS}	Zero Gate Voltage Drain Current	—	—	-25	µA	V_{DS} = -160V, V_{GS} = 0V
		—	—	-250		V_{DS} = -160V,V_{GS} = 0V,T_J =125°C
I_{GSS}	Gate-to-Source Leakage Forward	—	—	-100	nA	V_{GS} = -20V
	Gate-to-Source Leakage Reverse	—	—	100		V_{GS} = 20V
Q_G	Total Gate Charge	14.7	—	34.8	nC	I_{D1} = -4.0A
Q_{GS}	Gate-to-Source Charge	0.8	—	6.1		V_{DS} = -100V
Q_{GD}	Gate-to-Drain ('Miller') Charge	5.0	—	20.5		V_{GS} = -10V
$t_{d(on)}$	Turn-On Delay Time	—	—	50	ns	V_{DD} = -75V
tr	Rise Time	—	—	100		I_{D1} = -4.0A
$t_{d(off)}$	Turn-Off Delay Time	—	—	80		R_G = 7.5Ω
t_f	Fall Time	—	—	80		V_{GS} = -10V
Ls +L_D	Total Inductance	—	7.0	—	nH	Measured from Drain lead (6mm / 0.25 in from package) to Source lead (6mm/ 0.25 in from package) with Source wire internally bonded from Source pin to Drain pin
C_{iss}	Input Capacitance	—	700	—	pF	V_{GS} = 0V
C_{oss}	Output Capacitance	—	200	—		V_{DS} = -25V
C_{rss}	Reverse Transfer Capacitance	—	40	—		f = 1.0MHz

Source-Drain Diode Ratings and Characteristics

Symbol	Parameter	Min.	Typ.	Max.	Units	Test Conditions
I_S	Continuous Source Current (Body Diode)	—	—	-4.0	A	
I_{SM}	Pulsed Source Current (Body Diode) ①	—	—	-20		
V_{SD}	Diode Forward Voltage	—	—	-5.6	V	T_J = 25°C,I_S = -4.0A, V_{GS} = 0V④
t_{rr}	Reverse Recovery Time	—	—	400	ns	T_J = 25°C, I_F = -4.0A, V_{DD} ≤ -50V
Q_{rr}	Reverse Recovery Charge	—	—	4.0	µC	di/dt = -100A/µs ④
t_{on}	Forward Turn-On Time	Intrinsic turn-on time is negligible (turn-on is dominated by L_S+L_D)				

Thermal Resistance

Symbol	Parameter	Min.	Typ.	Max.	Units
$R_{\theta JC}$	Junction-to-Case	—	—	5.0	°C/W
$R_{\theta JA}$	Junction-to-Ambient (Typical Socket Mount)	—	—	175	

Footnotes:

① Repetitive Rating; Pulse width limited by maximum junction temperature.

② V_{DD} = -50V, starting T_J = 25°C, Peak I_L = -4.0A, V_{GS} = -10V

③ I_{SD} ≤ -4.0A, di/dt ≤ -120A/µs, V_{DD} ≤ -200V, T_J ≤ 150°C, Suggested R_G = 7.5 Ω

④ Pulse width ≤ 300 µs; Duty Cycle ≤ 2%

Downloaded from Arrow.com.

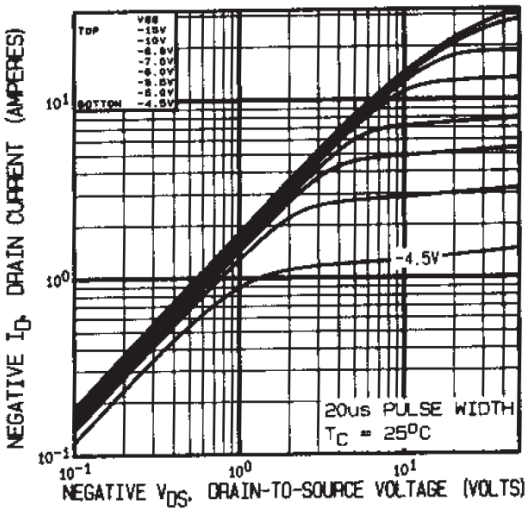

Fig 1. Typical Output Characteristics

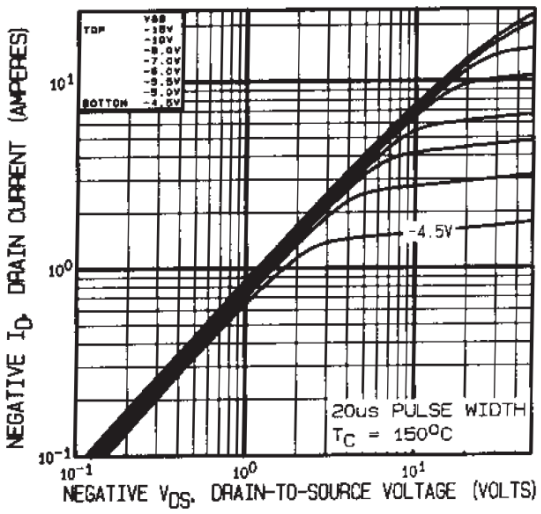

Fig 2. Typical Output Characteristics

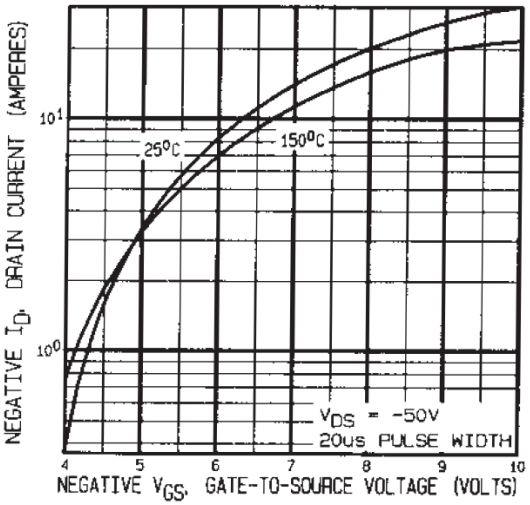

Fig 3. Typical Transfer Characteristics

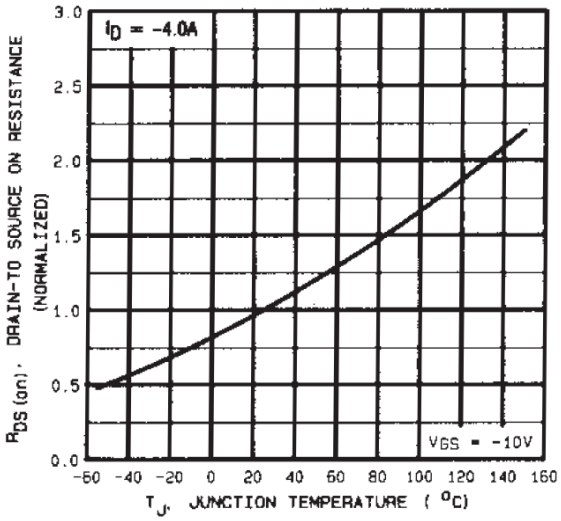

Fig 4. Normalized On-Resistance Vs. Temperature

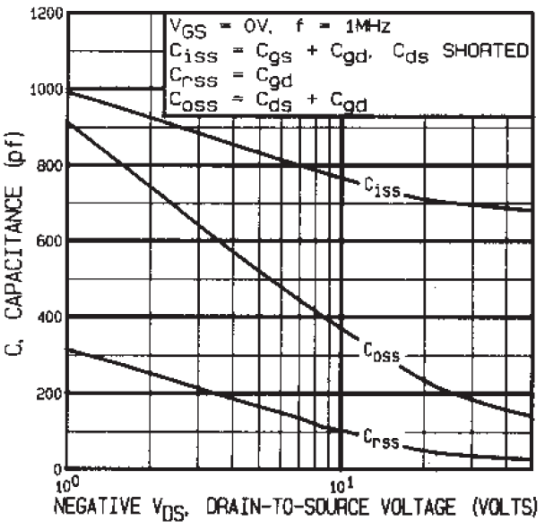

Fig 5. Typical Capacitance Vs. Drain-to-Source Voltage

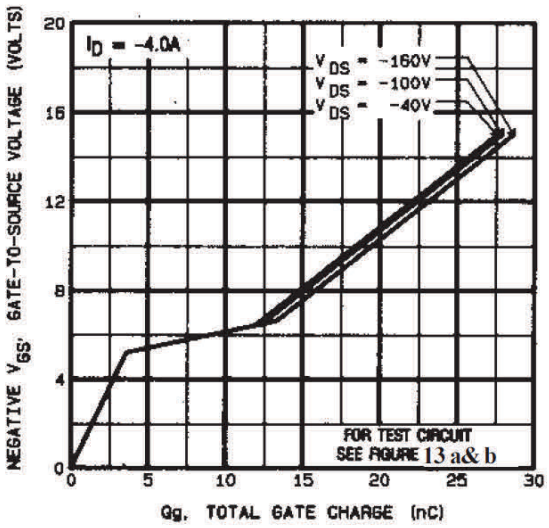

Fig 6. Typical Gate Charge Vs. Gate-to-Source Voltage

Downloaded from Arrow.com.

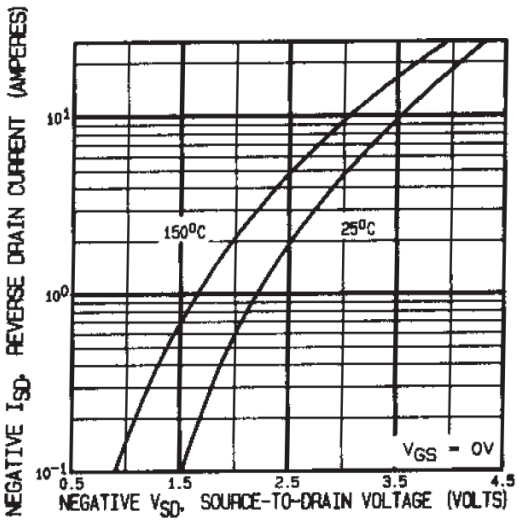

Fig 7. Typical Source-Drain Diode Forward Voltage

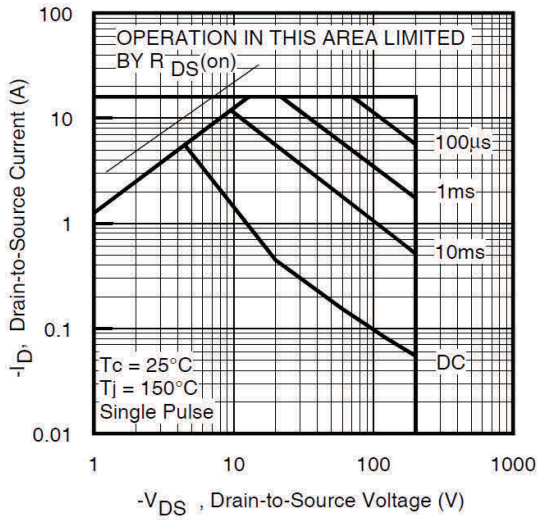

Fig 8. Maximum Safe Operating Area

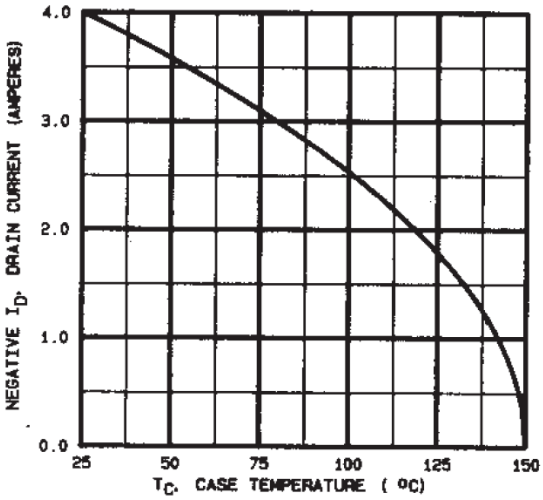

Fig 9. Maximum Drain Current Vs. Case Temperature

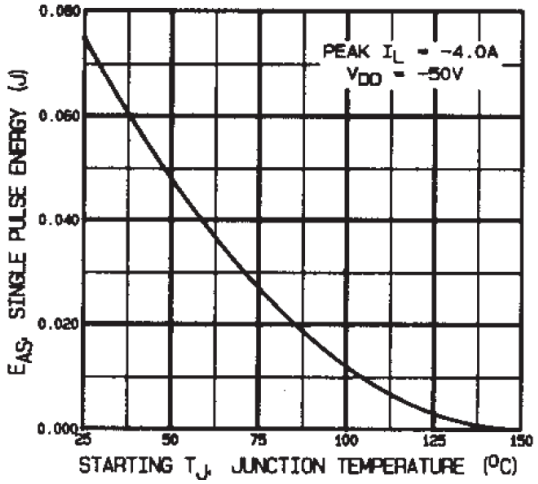

Fig 10. Maximum Avalanche Energy Vs. Drain Current

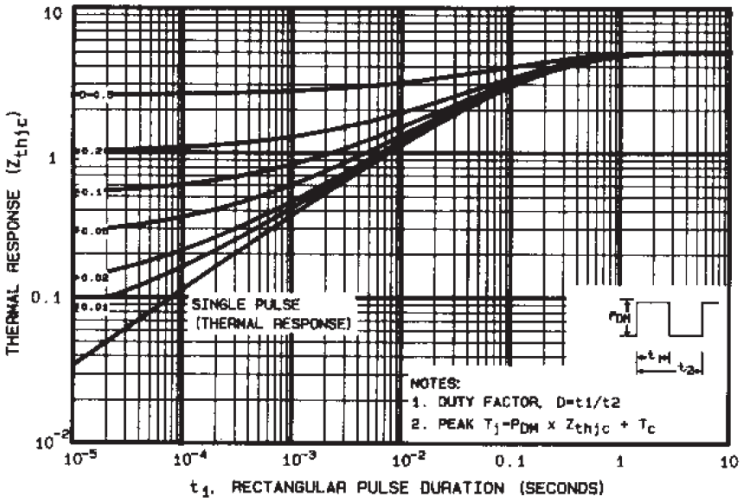

Fig 11. Maximum Effective Transient Thermal Impedance, Junction-to-Case

Downloaded from Arrow.com.

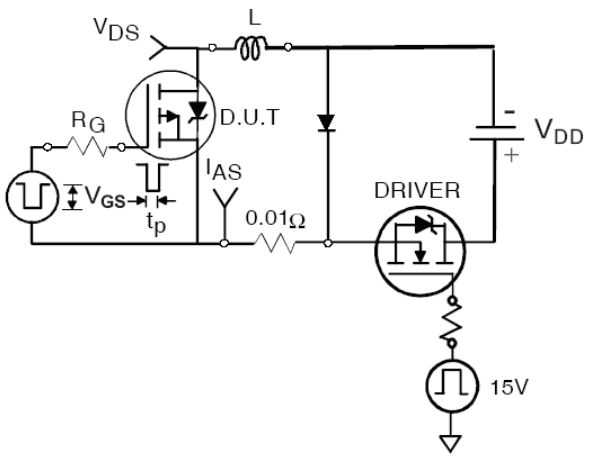

Fig 12a. Unclamped Inductive Test Circuit

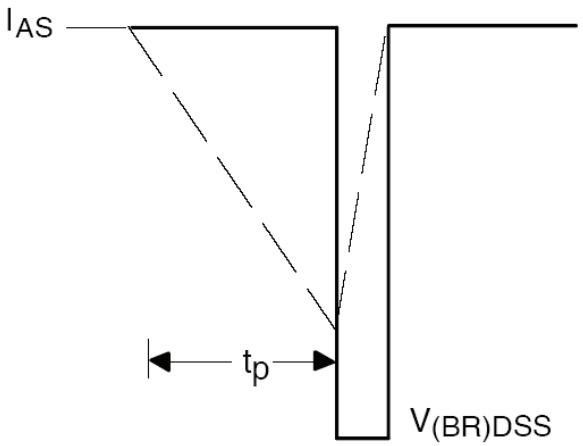

Fig 12b. Unclamped Inductive Waveforms

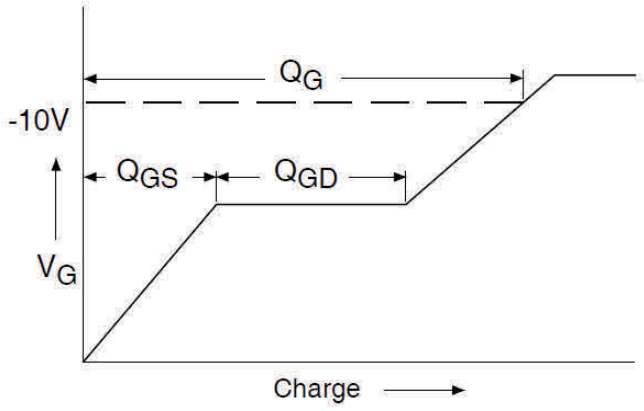

Fig 13a. Gate Charge Waveform

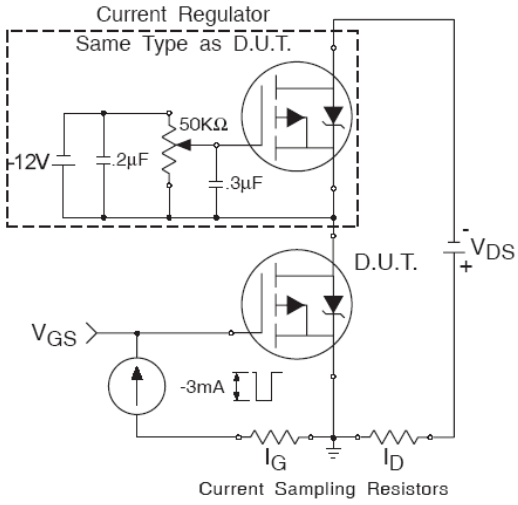

Fig 13b. Gate Charge Test Circuit

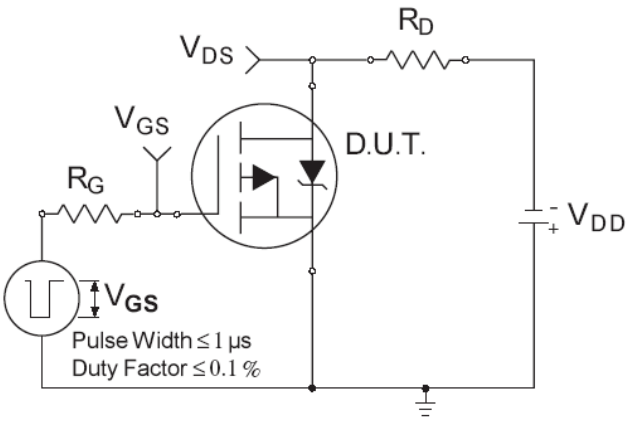

Fig 14a. Switching Time Test Circuit

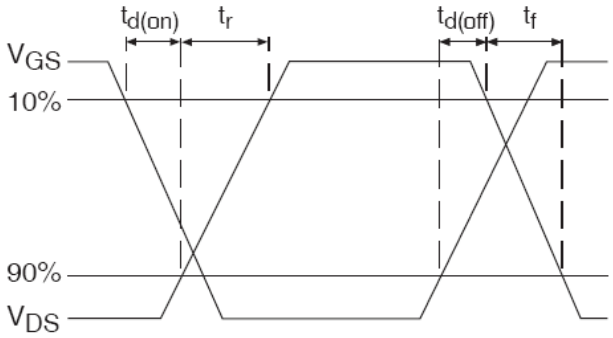

Fig 14b. Switching Time Waveforms

Downloaded from Arrow.com.

Case Outline and Dimensions - TO-205AF (TO-39)

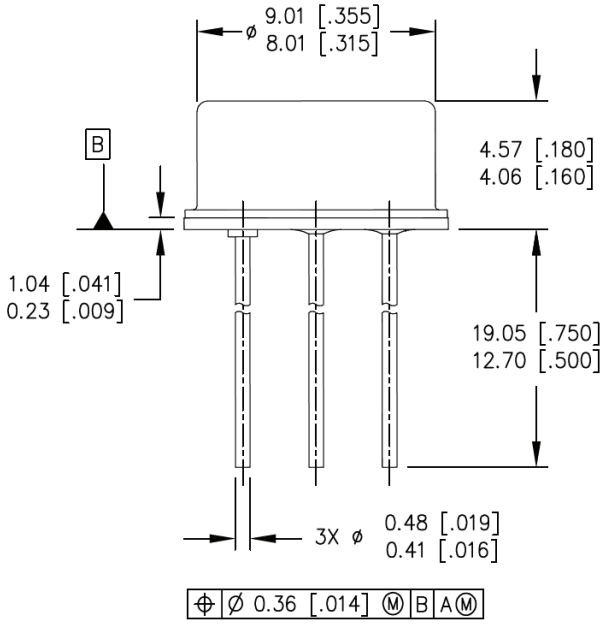

SIDE VIEW

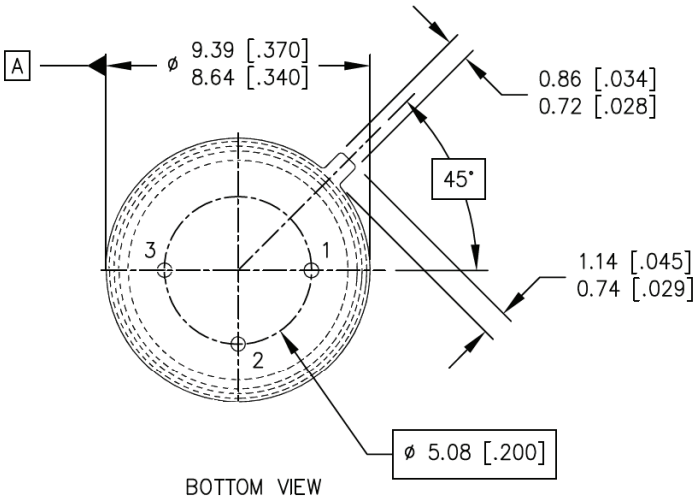

BOTTOM VIEW

NOTES:

1. DIMENSIONING AND TOLERANCING PER ASME 14.5M–1994.
2. DIMENSIONS ARE SHOWN IN MILLIMETERS [INCHES].
3. CONTROLLING DIMENSION: INCH.
4. CONFORMS TO JEDEC OUTLINE TO–205AF (TO–39).

LEGEND
1- SOURCE
2- GATE
3- DRAIN (CONNECTED TO THE CASE)

An Infineon Technologies Company
www.infineon.com/irhirel

Infineon Technologies Service Center: USA Tel: +1 (866) 951-9519 and International Tel: +49 89 234 65555
Leominster, Massachusetts 01453, USA Tel: +1 (978) 534-5776
San Jose, California 95134, USA Tel: +1 (408) 434-5000
Data and specifications subject to change without notice.

Downloaded from Arrow.com.

IMPORTANT NOTICE

The information given in this document shall be in no event regarded as guarantee of conditions or characteristic. The data contained herein is a characterization of the component based on internal standards and is intended to demonstrate and provide guidance for typical part performance. It will require further evaluation, qualification and analysis to determine suitability in the application environment to confirm compliance to your system requirements.

With respect to any example hints or any typical values stated herein and/or any information regarding the application of the product, Infineon Technologies hereby disclaims any and all warranties and liabilities of any kind including without limitation warranties on non- infringement of intellectual property rights and any third party.

In addition, any information given in this document is subject to customer's compliance with its obligations stated in this document and any applicable legal requirements, norms and standards concerning customer's product and any use of the product of Infineon Technologies in customer's applications.

The data contained in this document is exclusively intended for technically trained staff. It is the responsibility of any customer's technical departments to evaluate the suitability of the product for the intended applications and the completeness of the product information given in this document with respect to applications.

For further information on the product, technology, delivery terms and conditions and prices, please contact your local sales representative or go to (www.infineon.com/hirel).

WARNING

Due to technical requirements products may contain dangerous substances. For information on the types in question, please contact your nearest Infineon Technologies office.

Downloaded from Arrow.com.