SIGN	DATE	DESCRIPTION	APPROVER

THIS IS CAD DRAWING, DO NOT REVISE MANUALLY!!!

PART NUMBER:

USB-M2XFXX

Packaging:
TR - tape/reel w/pick up pad
TU - tube
T0 - tape/reel w/out pad

Plating:
6 - selective flash gold
8 - selective 30u" gold
may require MOQ

Material

- Insulator: Glass Filled Polyamide
- Flammability: UL94V-0
- Contacts: Copper Alloy
- Shell: Copper Alloy
- Shell Plating: 120u" Tin over 30u" Nickel

Ratings

- Current: 1A
- Voltage: 30V AC(r.m.s.)
- Contact Resistance: <30mU
- Insulation Resistance: >1000 MU
- Dielectric Strength: 750V AC
- Operating Temp: 0°C - +40°C
- Storage Temp: -40°C - +60°C

RoHS Compliant

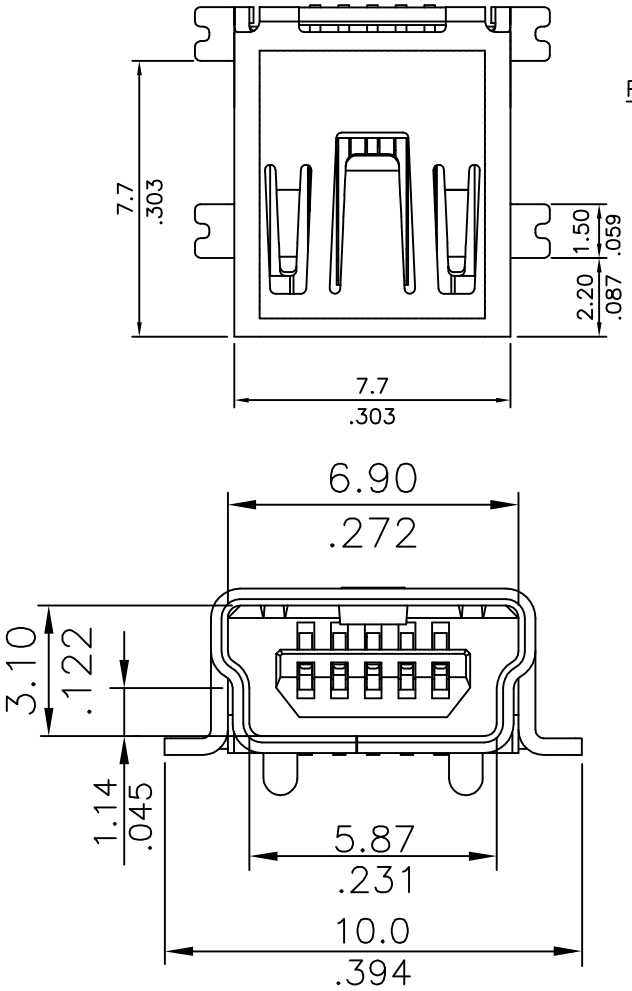

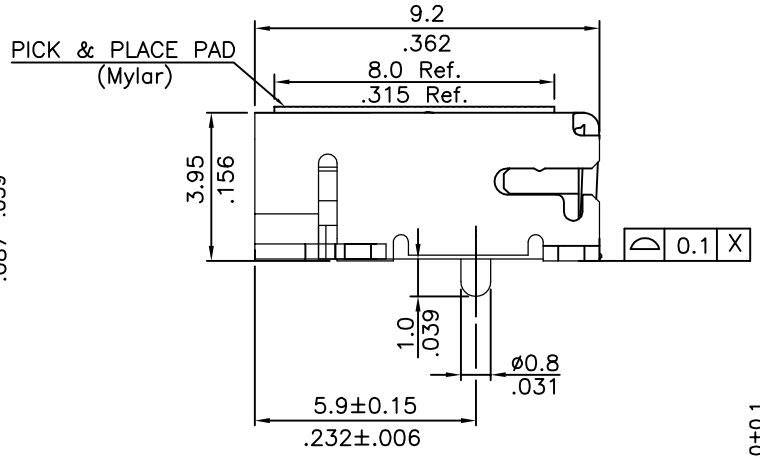

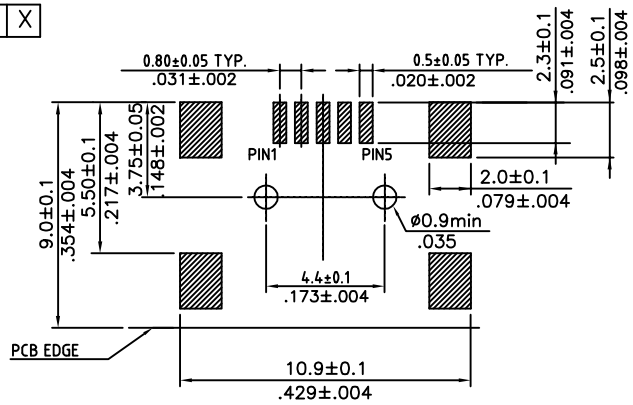

Recommended P.C. Board Layout

THESE DRAWINGS AND SPECIFICATIONS ARE THE PROPERTY OF ON-SHORE TECHNOLOGY, INC. AND SHALL NOT BE REPRODUCED, COPIED OR USED IN ANY MANNER WITHOUT THE PRIOR WRITTEN CONSENT OF ON-SHORE TECHNOLOGY, INC.

ON-SHORE TECHNOLOGY, INC.

TITLE	Mini USB - SMT Board Mount- B Type				
PART NO.	USB-M2XFXX			DWG NO.	USB-M2XFXX.DWG
APPROVED	CHECKED	DESIGNED	DRAWN		4050
Stephen 2006.09.30	Marvin 2006.09.30	Sun 2006.09.30	Lee 2006.09.30	UNIT: mm/inches SCALE: NONE SHEET: 1/1	REV.: B

Tolerance	
X.°	±1°
X.X	±0.20/.008
X.XX	±0.10/.004
X.XXX	±0.05/.002

Downloaded from Arrow.com.