Data Sheet | Item Number: 216-102

Ferrule; Sleeve for 0.75 mm² / 18 AWG; uninsulated; electro-tin plated; silver-colored

https://www.wago.com/216-102

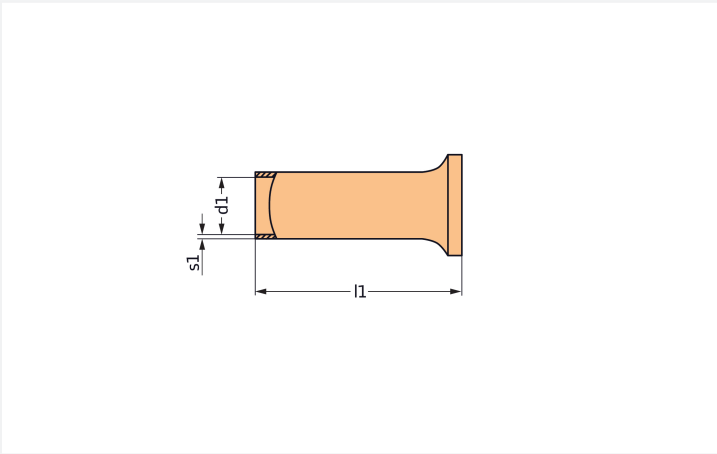

Color: silver-colored

Dimensions in mm

Connection Data	
Metric cross-section of the ferrule	0.75 mm²
Strip length	8 mm / 0.31 inches
Cross-section (AWG) of ferrule	18 AWG

Physical data	
Total length (L)	8 mm
Wall thickness of crimp sleeve (W2)	0.15 mm
Diameter crimp sleeve inside (D2)	1.2 mm

Mechanical data	
Plastic collar	No

Material data	
Color	silver-colored
Weight	0 g

Commercial data	
Product Group	2 (Terminal Block Accessories)
PU (SPU)	5000 (1000) pcs
Packaging type	Box
Country of origin	DE
GTIN	4017332277631
Customs tariff number	85369010000

Downloaded from Arrow.com.

Product Classification

UNSPSC	39121405
eCl@ss 10.0	27-40-02-01
eCl@ss 9.0	27-40-02-01
ETIM 9.0	EC000005
ETIM 10.0	EC000005
ECCN	NO US CLASSIFICATION

Environmental Product Compliance

RoHS Compliance Status	Compliant,No Exemption

Downloads

Environmental Product Compliance

Compliance Search

Environmental Product Compliance 216-102

Documentation

Bid Text

216-102	11.09.2017	doc 24.00 KB	
216-102	19.02.2019	xml 2.77 KB	

Installation Notes

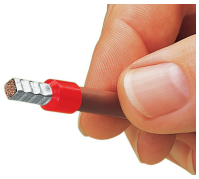

A perfect gas-tight crimp – both electrically and mechanically reliable

Downloaded from Arrow.com.