XC6214 Series

ETR0318-013

500mA Output Current, High Speed LDO Regulators,
Thermal Shutdown Function, Ceramic Capacitor Compatible

■GENERAL DESCRIPTION

The XC6214 series are highly precise, low noise, high current, positive voltage, low dropout voltage regulators. They are fabricated using CMOS process. The series features a voltage reference, an error amplifier, a current limiter, a thermal protection circuit, and a phase compensation circuit plus a driver transistor.
The output voltage is selectable in 1.2V, 1.5V, 1.8V, 2.5V, 3.0V and 3.3V.
The series is also compatible with low ESR ceramic capacitors, which provides stable output voltage. This stability can be maintained even during load fluctuations due to the excellent transient response.
The over current protection circuit and the thermal shutdown circuit are built in. The over current protection circuit will operate when the output current reaches limit current. The thermal shutdown circuit will operate when the junction temperature reaches limit temperature.

■APPLICATIONS

- Optical disk drive
- Magnetic disk drive
- Digital still cameras / Camcorders
- Smart phones / Mobile phones
- Note PCs / Tablet PCs
- Mobile devices / terminals
- Wireless LAN
- Reference voltage sources
- Multi-function power supplies

■FEATURES

Maximum Output Current	: More than 500mA (800mA limit)
Dropout Voltage	: 500mV @ IOUT = 500mA (VOUT=3.3V)
Operating Voltage Range	: 1.8V ~ 6.0V
Output Voltage	: 1.2V, 1.5V, 1.8V, 2.5V, 3.0V, 3.3V (standard) Other voltages between 1.2V to 5.0V (semi-custom)
High Accuracy	: Setting voltage accuracy ±2%
Low Power Consumption	: 8μA (TYP.)
Ripple Rejection Rate	: 40dB @ 1kHz
Current Limit Circuit Built-In	
Thermal Shutdown Circuit Built-In	
Ceramic Capacitor Compatible	
Operating Ambient Temperature	: - 40℃ ~ 85℃
Packages	: SOT-89, TO-252
Environmentally Friendly	: EU RoHS Compliant, Pb Free

■TYPICAL APPLICATION CIRCUIT

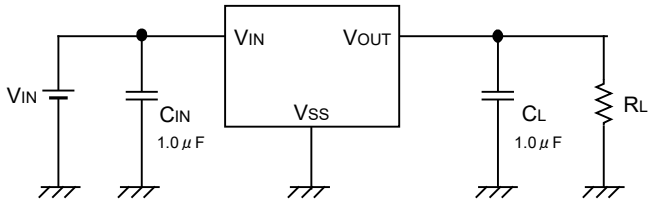

■TYPICAL PERFORMANCE CHARACTERISTICS

● Dropout Voltage vs. Output Current

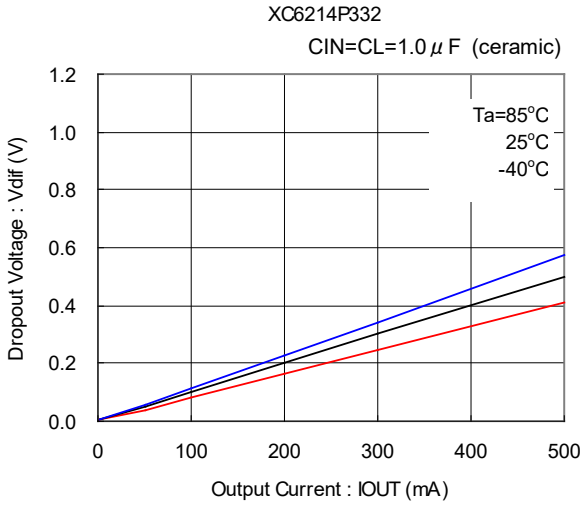

Downloaded from Arrow.com.

■PIN CONFIGURATION

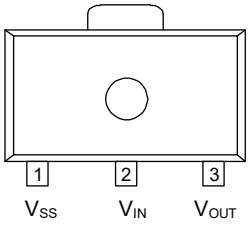

SOT-89 (TOP VIEW)

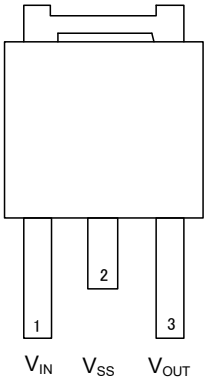

TO-252 (TOP VIEW)

■PIN ASSIGNMENT

PIN NUMBER		PIN NAME	FUNCTIONS
SOT-89	TO-252		
2	1	V_{IN}	Power Input
1	2	V_{SS}	Ground
-	-	NC	No Connection
3	3	V_{OUT}	Output

■PRODUCT CLASSIFICATION

●Ordering Information

XC6214P①②③④⑤-⑥(*1)

DESIGNATOR	ITEM	SYMBOL	DESCRIPTION
①②	Output Voltage	12 ~ 50	ex.) 3.0V products → ①=3, ②=0
③	Output Voltage Accuracy	2	Within ±2% ex.) 2.50V products → ①=2, ②=5, ③=2
④⑤-⑥	Packages (Order Unit)	PR	SOT-89 (1,000/Reel)
		PR-G	SOT-89 (1,000/Reel)
		JR	TO-252 (2,500/Reel)
		JR-G	TO-252 (2,500/Reel)

(*1) The "-G" suffix denotes Halogen and Antimony free as well as being fully EU RoHS compliant.

Downloaded from Arrow.com.

■BLOCK DIAGRAM

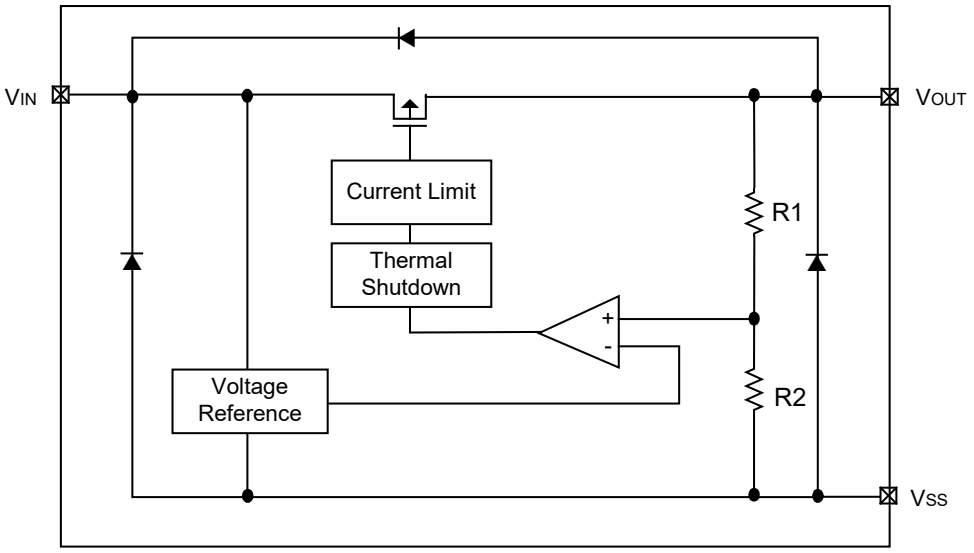

* Diodes inside the circuit are ESD protection diodes and parasitic diodes.

■ABSOLUTE MAXIMUM RATINGS

Ta=25℃

PARAMETER		SYMBOL	RATINGS	UNITS
Input Voltage		V_{IN}	- 0.3 ~ + 6.5	V
Output Current (*1)		I_{OUT}	800	mA
Output Voltage		V_{OUT}	V_{SS} – 0.3 ~ V_{IN} + 0.3	V
Power Dissipation	SOT-89	Pd	500	mW
	TO-252		1800 (*2)	
Operating Ambient Temperature		Topr	- 40 ~ + 85	℃
Storage Temperature		Tstg	- 55 ~ + 125	℃

(*1) $I_{OUT} \leq Pd / (V_{IN}–V_{OUT})$

(*2) The power dissipation figure shown is PCB mounted. Please refer to pages 22 ~ 23 for details.

Downloaded from Arrow.com.

■ELECTRICAL CHARACTERISTICS

●XC6214P122

Ta=25 ℃

PARAMETER	SYMBOL	CONDITIONS	MIN.	TYP.	MAX.	UNITS	CIRCUIT
Output Voltage	$V_{OUT(E)}$ (*1)	V_{IN}=2.2V, I_{OUT}=50mA	1.170	1.200	1.230	V	①
Maximum Output Current	I_{OUTmax}	V_{IN}=2.25V, V_{OUT}=$V_{OUT(E)}$×0.90	500	-	-	mA	①
Load Regulation	ΔV_{OUT}	V_{IN}=2.2V, 1mA≦I_{OUT}≦200mA	-	20	50	mV	①
Dropout Voltage (*2)	Vdif	I_{OUT}=500mA	-	900	1350	mV	①
Supply Current	I_{SS}	V_{IN}=2.5V	-	8	15	μA	②
Line Regulation	ΔV_{OUT} / $\Delta V_{IN} \cdot V_{OUT}$	I_{OUT}=50mA 2.5V≦V_{IN}≦6.0V	-	0.05	0.20	% / V	①
Input Voltage	V_{IN}		1.8	-	6.0	V	-
Output Voltage Temperature Characteristics	ΔV_{OUT} / $\Delta Topr \cdot V_{OUT}$	I_{OUT}=50mA - 40℃≦ Topr ≦85℃	-	±100	-	ppm /℃	①
Short-Circuit Current	Ilim	V_{IN}=2.2V, V_{OUT}=0V	-	50	-	mA	①

Unless otherwise stated, V_{IN}=$V_{OUT(T)}$ +1.0V

NOTE:

*1: $V_{OUT(E)}$: Effective output voltage (i.e. the output voltage when "$V_{OUT(T)}$+1.0V" is provided at the VIN pin while maintaining a certain I_{OUT} value.)

*2: Vdif={V_{IN1} –V_{OUT1} }

V_{IN1} :An Input Voltage when V_{OUT1} appears as the input voltage is gradually decreased.

V_{OUT1} : A voltage equal to 98% of the output voltage whenever an amply stabilized I_{OUT} {$V_{OUT(T)}$+1.0V} is input.

●XC6214P152

Ta=25 ℃

PARAMETER	SYMBOL	CONDITIONS	MIN.	TYP.	MAX.	UNITS	CIRCUIT
Output Voltage	$V_{OUT(E)}$ (*1)	V_{IN}=2.5V, I_{OUT}=50mA	1.470	1.500	1.530	V	①
Maximum Output Current	I_{OUTmax}	V_{IN}=2.5V, V_{OUT}=$V_{OUT(E)}$×0.90	500	-	-	mA	①
Load Regulation	ΔV_{OUT}	V_{IN}=2.5V, 1mA≦I_{OUT}≦200mA	-	20	50	mV	①
Dropout Voltage (*2)	Vdif	I_{OUT}=500mA	-	800	1200	mV	①
Supply Current	I_{SS}	V_{IN}=2.5V	-	8	15	μA	②
Line Regulation	ΔV_{OUT} / $\Delta V_{IN} \cdot V_{OUT}$	I_{OUT}=50mA 2.5V≦V_{IN}≦6.0V	-	0.05	0.20	% / V	①
Input Voltage	V_{IN}		1.8	-	6.0	V	-
Output Voltage Temperature Characteristics	ΔV_{OUT} / $\Delta Topr \cdot V_{OUT}$	I_{OUT}=50mA - 40℃≦ Topr ≦85℃	-	±100	-	ppm /℃	①
Short-Circuit Current	Ilim	V_{IN}=2.5V, V_{OUT}=0V	-	50	-	mA	①

Unless otherwise stated, V_{IN}=$V_{OUT(T)}$ +1.0V

NOTE:

*1: $V_{OUT(E)}$: Effective output voltage (i.e. the output voltage when "$V_{OUT(T)}$+1.0V" is provided at the VIN pin while maintaining a certain I_{OUT} value.)

*2: Vdif={V_{IN1} –V_{OUT1} }

V_{IN1} :An Input Voltage when V_{OUT1} appears as the input voltage is gradually decreased.

V_{OUT1} : A voltage equal to 98% of the output voltage whenever an amply stabilized I_{OUT} {$V_{OUT(T)}$+1.0V} is input.

Downloaded from Arrow.com.

■ELECTRICAL CHARACTERISTICS (Continued)

●XC6214P182

Ta=25 ℃

PARAMETER	SYMBOL	CONDITIONS	MIN.	TYP.	MAX.	UNITS	CIRCUIT
Output Voltage	$V_{OUT(E)}$ (*1)	V_{IN}=2.8V, I_{OUT}=50mA	1.764	1.800	1.836	V	①
Maximum Output Current	I_{OUTmax}	V_{IN}=2.85V, V_{OUT}=$V_{OUT(E)}$×0.90	500	-	-	mA	①
Load Regulation	ΔV_{OUT}	V_{IN}=2.8V, 1mA≦I_{OUT}≦200mA	-	20	50	mV	①
Dropout Voltage (*2)	Vdif	I_{OUT}=500mA	-	700	1050	mV	①
Supply Current	I_{SS}	V_{IN}=2.8V	-	8	15	μA	②
Line Regulation	ΔV_{OUT} / $\Delta V_{IN} \cdot V_{OUT}$	I_{OUT}=50mA 2.8V≦V_{IN}≦6.0V	-	0.05	0.20	% / V	①
Input Voltage	V_{IN}		1.8	-	6.0	V	-
Output Voltage Temperature Characteristics	ΔV_{OUT} / $\Delta Topr \cdot V_{OUT}$	I_{OUT}=50mA - 40℃ ≦ Topr ≦85℃	-	±100	-	ppm /℃	①
Short-Circuit Current	Ilim	V_{IN}=2.8V, V_{OUT}=0V	-	50	-	mA	①

Unless otherwise stated, V_{IN}=$V_{OUT(T)}$ +1.0V

NOTE:

*1: $V_{OUT(E)}$: Effective output voltage (i.e. the output voltage when "$V_{OUT(T)}$+1.0V" is provided at the VIN pin while maintaining a certain I_{OUT} value.)

*2: Vdif={V_{IN1} –V_{OUT1} }

V_{IN1} :An Input Voltage when V_{OUT1} appears as the input voltage is gradually decreased.

V_{OUT1} : A voltage equal to 98% of the output voltage whenever an amply stabilized I_{OUT} {$V_{OUT(T)}$+1.0V} is input.

●XC6214P252

Ta=25 ℃

PARAMETER	SYMBOL	CONDITIONS	MIN.	TYP.	MAX.	UNITS	CIRCUIT
Output Voltage	$V_{OUT(E)}$ (*1)	V_{IN}=3.5V, I_{OUT}=50mA	2.450	2.500	2.550	V	①
Maximum Output Current	I_{OUTmax}	V_{IN}=3.5V, V_{OUT}=$V_{OUT(E)}$×0.93	500	-	-	mA	①
Load Regulation	ΔV_{OUT}	V_{IN}=3.5V, 1mA≦I_{OUT}≦200mA	-	20	50	mV	①
Dropout Voltage (*2)	Vdif	I_{OUT}=500mA	-	600	900	mV	①
Supply Current	I_{SS}	V_{IN}=3.5V	-	8	15	μA	②
Line Regulation	ΔV_{OUT} / $\Delta V_{IN} \cdot V_{OUT}$	I_{OUT}=50mA 3.5V≦V_{IN}≦6.0V	-	0.05	0.20	% / V	①
Input Voltage	V_{IN}		1.8	-	6.0	V	-
Output Voltage Temperature Characteristics	ΔV_{OUT} / $\Delta Topr \cdot V_{OUT}$	I_{OUT}=50mA - 40℃≦Topr ≦85℃	-	± 100	-	ppm /℃	①
Short-Circuit Current	Ilim	V_{IN}=3.5V, V_{OUT}=0V	-	50	-	mA	①

Unless otherwise stated, V_{IN}=$V_{OUT(T)}$ +1.0V

NOTE:

*1: $V_{OUT(E)}$: Effective output voltage (i.e. the output voltage when "$V_{OUT(T)}$+1.0V" is provided at the VIN pin while maintaining a certain I_{OUT} value.)

*2: Vdif={V_{IN1} –V_{OUT1} }

V_{IN1} :An Input Voltage when V_{OUT1} appears as the input voltage is gradually decreased.

V_{OUT1} : A voltage equal to 98% of the output voltage whenever an amply stabilized I_{OUT} {$V_{OUT(T)}$+1.0V} is input.

Downloaded from Arrow.com.

■ELECTRICAL CHARACTERISTICS (Continued)

●XC6214P302

Ta=25 ℃

PARAMETER	SYMBOL	CONDITIONS	MIN.	TYP.	MAX.	UNITS	CIRCUIT
Output Voltage	$V_{OUT(E)}$ (*1)	V_{IN}=4.0V, I_{OUT}=50mA	2.940	3.000	3.060	V	①
Maximum Output Current	I_{OUTmax}	V_{IN}=4.0V, V_{OUT}=$V_{OUT(E)}$×0.96	500	-	-	mA	①
Load Regulation	ΔV_{OUT}	V_{IN}=4.0V, 1mA≦I_{OUT}≦200mA	-	20	50	mV	①
Dropout Voltage (*2)	Vdif	I_{OUT}=500mA	-	560	820	mV	①
Supply Current	I_{SS}	V_{IN}=4.0V	-	8	15	μA	②
Line Regulation	$\frac{\Delta V_{OUT}}{\Delta V_{IN} \cdot V_{OUT}}$	I_{OUT}=50mA 4.0V≦V_{IN}≦6.0V	-	0.05	0.20	% / V	①
Input Voltage	V_{IN}		1.8	-	6.0	V	-
Output Voltage Temperature Characteristics	$\frac{\Delta V_{OUT}}{\Delta Topr \cdot V_{OUT}}$	I_{OUT}=50mA - 40℃≦Topr ≦85℃	-	± 100	-	ppm /℃	①
Short-Circuit Current	Ilim	V_{IN}=4.0V, V_{OUT}=0V	-	50	-	mA	①

Unless otherwise stated, V_{IN}=$V_{OUT(T)}$ +1.0V

NOTE:

*1: $V_{OUT(E)}$: Effective output voltage (i.e. the output voltage when "$V_{OUT(T)}$+1.0V" is provided at the VIN pin while maintaining a certain I_{OUT} value.)

*2: Vdif={V_{IN1} –V_{OUT1} }

V_{IN1} :An Input Voltage when V_{OUT1} appears as the input voltage is gradually decreased.

V_{OUT1} : A voltage equal to 98% of the output voltage whenever an amply stabilized I_{OUT} {$V_{OUT(T)}$+1.0V} is input.

●XC6214P332

Ta=25 ℃

PARAMETER	SYMBOL	CONDITIONS	MIN.	TYP.	MAX.	UNITS	CIRCUIT
Output Voltage	$V_{OUT(E)}$ (*1)	V_{IN}=4.3V, I_{OUT}=50mA	3.234	3.300	3.366	V	①
Maximum Output Current	I_{OUTmax}	V_{IN}=4.3V, V_{OUT}=$V_{OUT(E)}$ x 0.96	500	-	-	mA	①
Load Regulation	ΔV_{OUT}	V_{IN}=4.3V, 1mA≦I_{OUT}≦200mA	-	20	50	mV	①
Dropout Voltage (*2)	Vdif	I_{OUT}=500mA	-	500	750	mV	①
Supply Current	I_{SS}	V_{IN}=4.3V	-	8	15	μA	②
Line Regulation	$\frac{\Delta V_{OUT}}{\Delta V_{IN} \cdot V_{OUT}}$	I_{OUT}=50mA 4.3V≦V_{IN}≦6.0V	-	0.05	0.20	% / V	①
Input Voltage	V_{IN}		1.8	-	6.0	V	-
Output Voltage Temperature Characteristics	$\frac{\Delta V_{OUT}}{\Delta Topr \cdot V_{OUT}}$	I_{OUT}=50mA - 40℃≦Topr≦85℃	-	±100	-	ppm /℃	①
Short-Circuit Current	Ilim	V_{IN}=4.3V, V_{OUT}=0V	-	50	-	mA	①

Unless otherwise stated, V_{IN}=$V_{OUT(T)}$ +1.0V

NOTE:

*1: $V_{OUT(E)}$: Effective output voltage (i.e. the output voltage when "$V_{OUT(T)}$+1.0V" is provided at the VIN pin while maintaining a certain I_{OUT} value.)

*2: Vdif={V_{IN1} –V_{OUT1} }

V_{IN1} :An Input Voltage when V_{OUT1} appears as the input voltage is gradually decreased.

V_{OUT1} : A voltage equal to 98% of the output voltage whenever an amply stabilized I_{OUT} {$V_{OUT(T)}$+1.0V} is input.

Downloaded from Arrow.com.

■TEST CIRCUITS

●Circuit ①

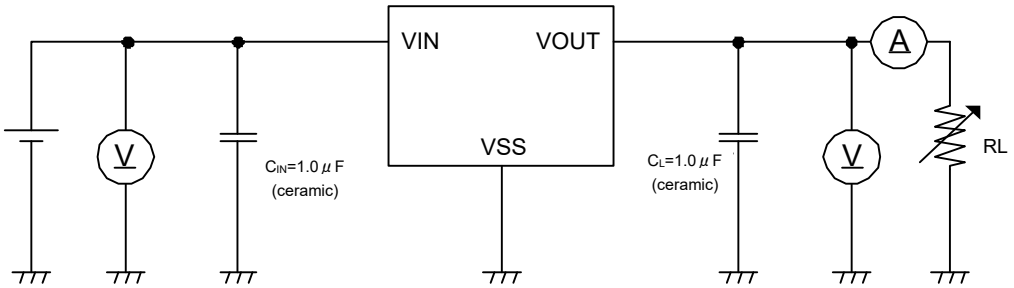

●Circuit ②

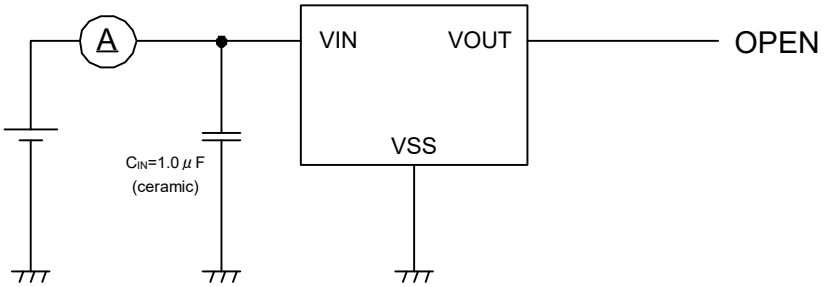

Downloaded from Arrow.com.

■OPERATIONAL EXPLANATION

<Output Voltage Regulator Control>

The voltage, divided by resistors R1 & R2, which are connected to the V_{OUT} pin is compared with the internal reference voltage by the error amplifier. The P-channel MOSFET, which is connected to the V_{OUT} pin, is then driven by the subsequent output signal. The output voltage at the V_{OUT} pin is controlled & stabilized by negative feedback. The current limit circuit and over current protection operate in relation to the level of output current and heat.

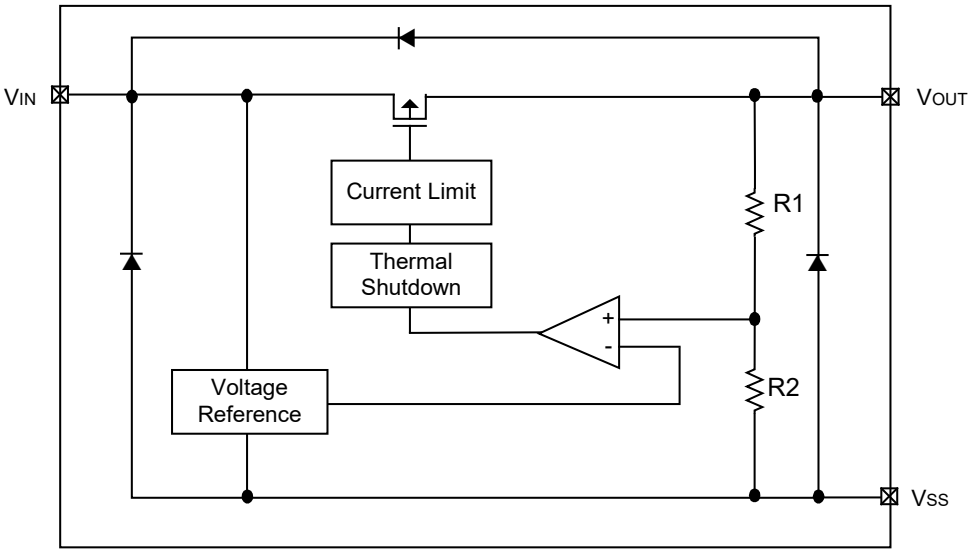

<Low ESR Capacitors>

With the XC6214 series regulator, a stable output voltage is achievable even if low ESR capacitors are used, as a phase compensation circuit is built-in to the regulator. In order to ensure the stability of the load transient response and line transient response, we suggest that an output capacitor (C_L) be connected as close as possible, between the output pin (V_{OUT}) and the VSS pin. Please use an output capacitor (C_L) with a capacitance more than 0.1μF. We also suggest an input capacitor (C_{IN}) of 0.1μF: this should be connected between V_{IN} and V_{SS} in order to stabilize input power source.

<Current Limiter, Short-Circuit Protection>

The XC6214 series regulator offers a combination of current limit and circuit protection by means of a built-in fixed current limiter circuit and a foldback circuit. When the output pin is shorted, a current of about 50mA flows.

<Thermal Shutdown>

When the junction temperature of the built-in driver transistor reaches the temperature limit level (150℃ TYP.), the thermal shutdown circuit operates and the driver transistor will be set to OFF. The thermal shutdown function will be released (automatically recovered) when the junction temperature decreases to the thermal shutdown release temperature level (125℃ TYP.) and the IC re-starts the operation.

■NOTES ON USE

1. Please use this IC within the stated absolute maximum ratings. The IC is liable to malfunction should the ratings be exceeded.
2. Where wiring impedance is high, operations may become unstable due to noise and/or phase lag depending on output current. Please strengthen V_{IN} and V_{SS} wiring in particular.
3. Please wire the input capacitor (C_{IN}) and the output capacitor (C_L) as close to the IC as possible.
4. Output voltage may increase when the IC is used at light load current (around 0 to 2μA) depending on temperature conditions, etc.

Downloaded from Arrow.com.

■TYPICAL PERFORMANCE CHARACTERISTICS

(1) Output Voltage vs. Output Current

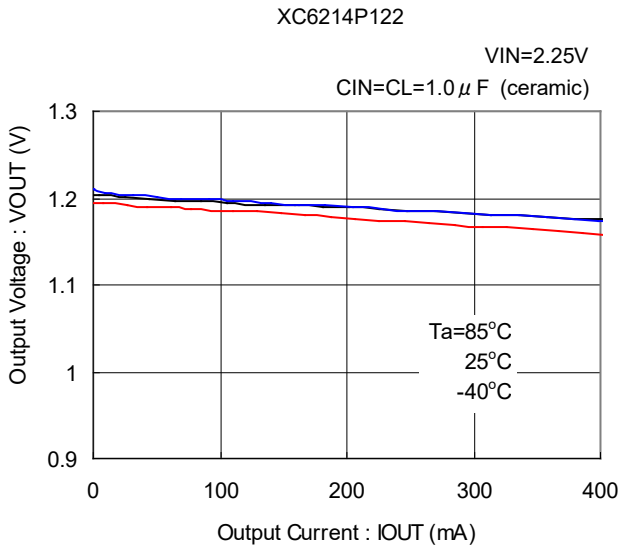

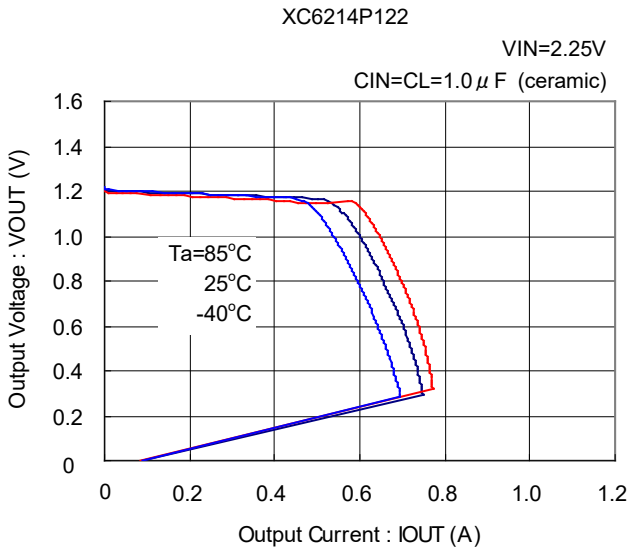

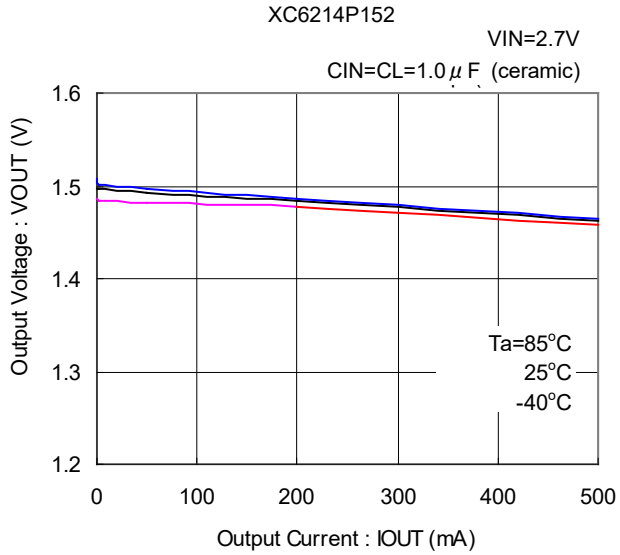

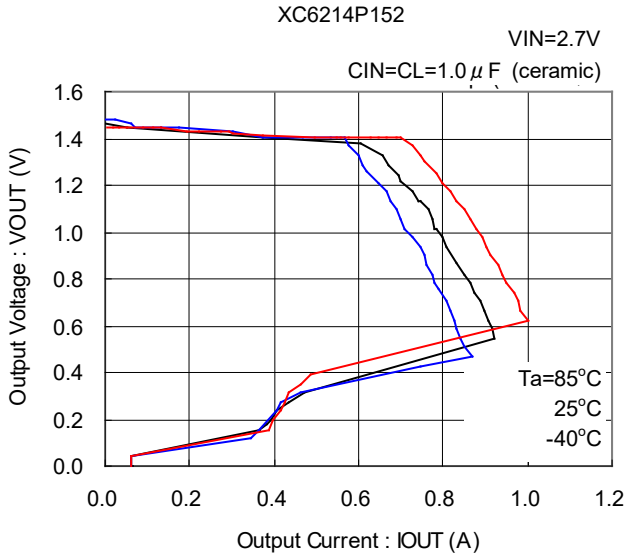

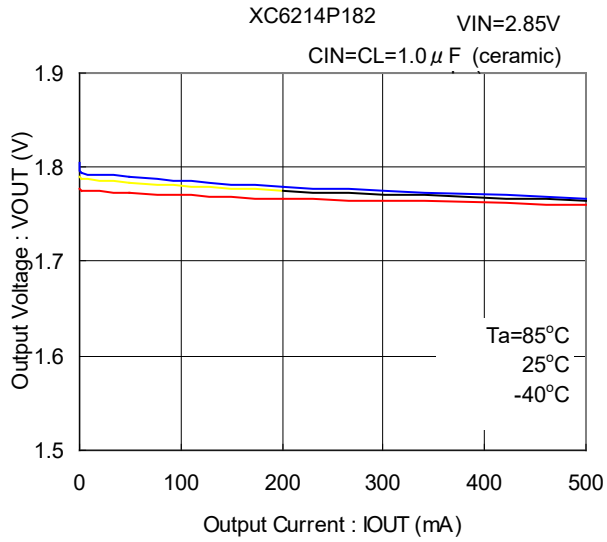

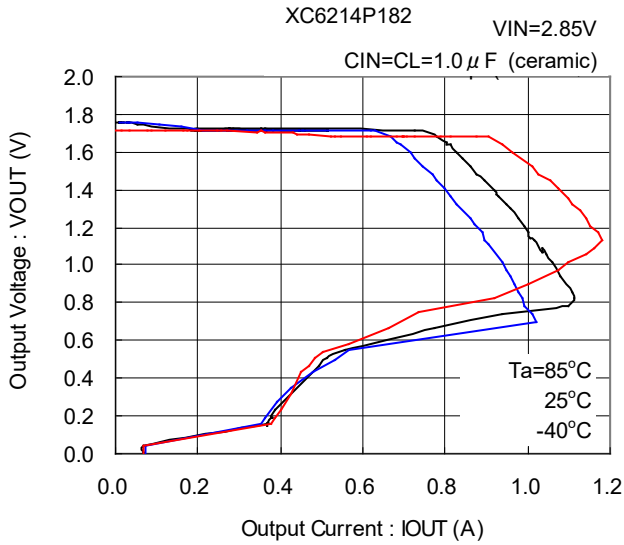

Downloaded from Arrow.com.

■TYPICAL PERFORMANCE CHARACTERISTICS (Continued)

(1) Output Voltage vs. Output Current (Continued)

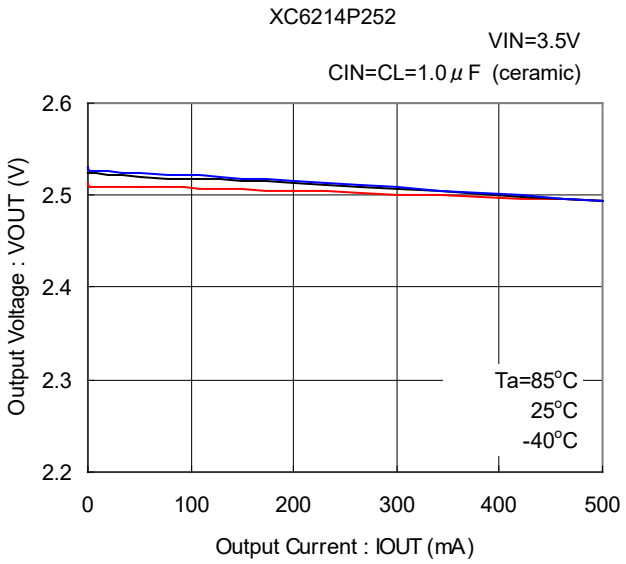

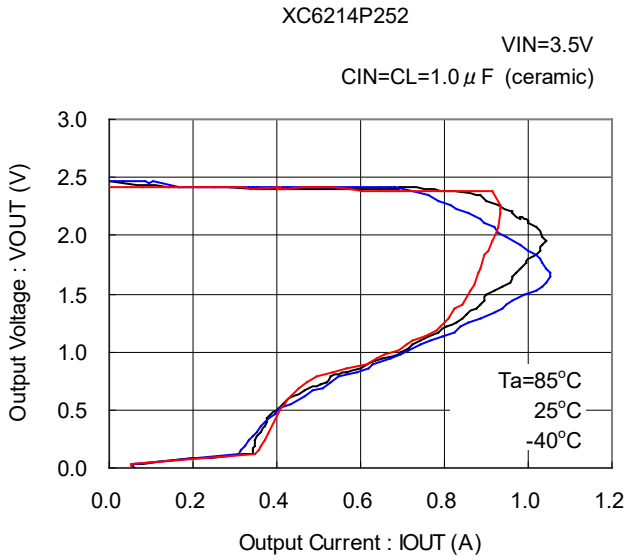

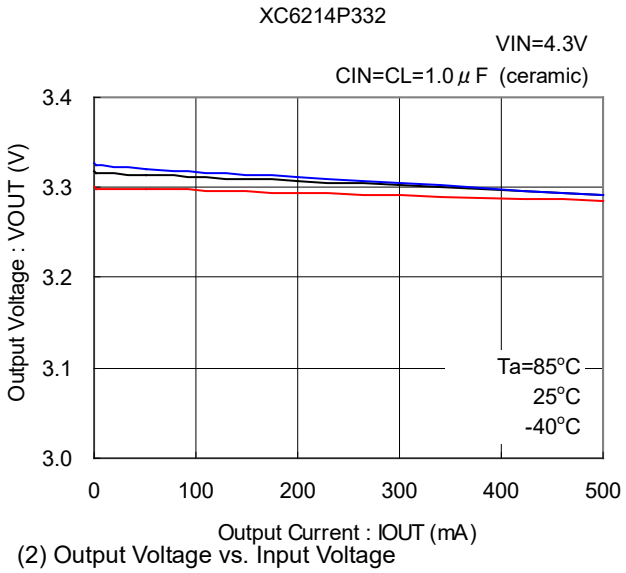

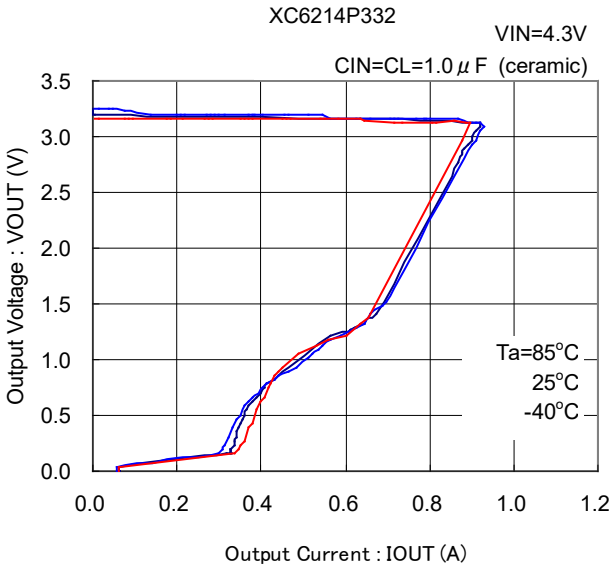

(2) Output Voltage vs. Input Voltage

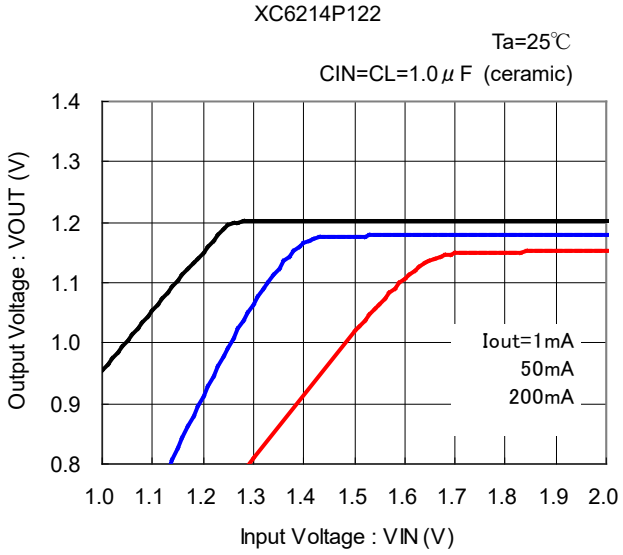

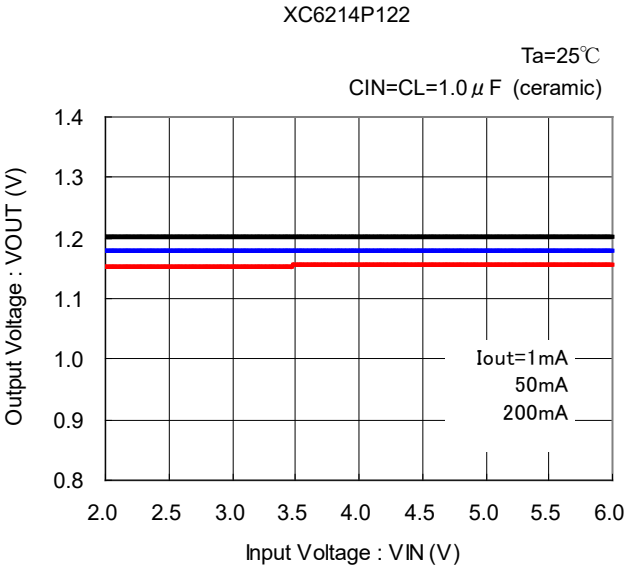

Downloaded from Arrow.com.

■TYPICAL PERFORMANCE CHARACTERISTICS (Continued)

(2) Output Voltage vs. Input Voltage (Continued)

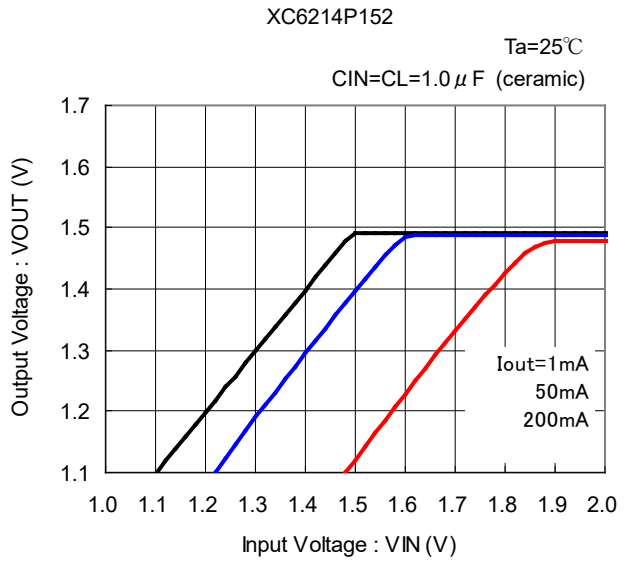

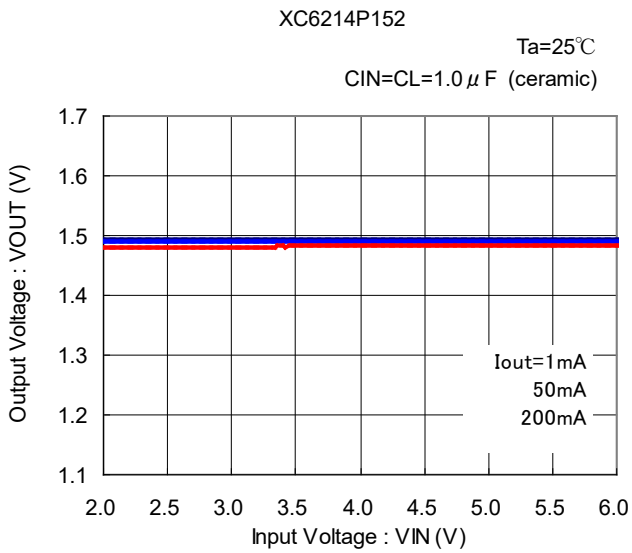

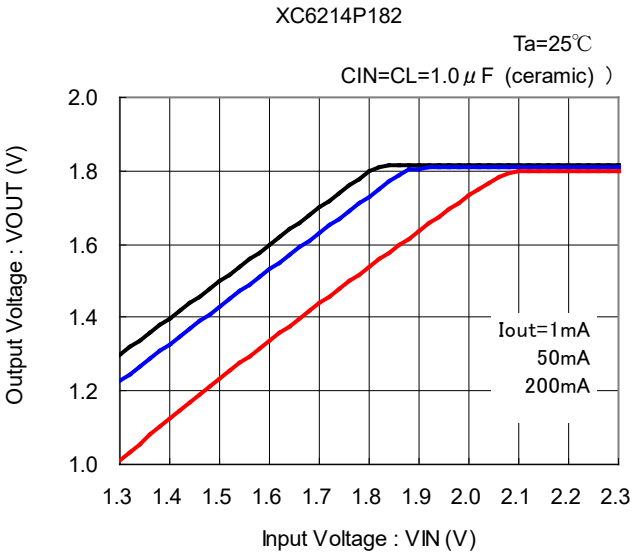

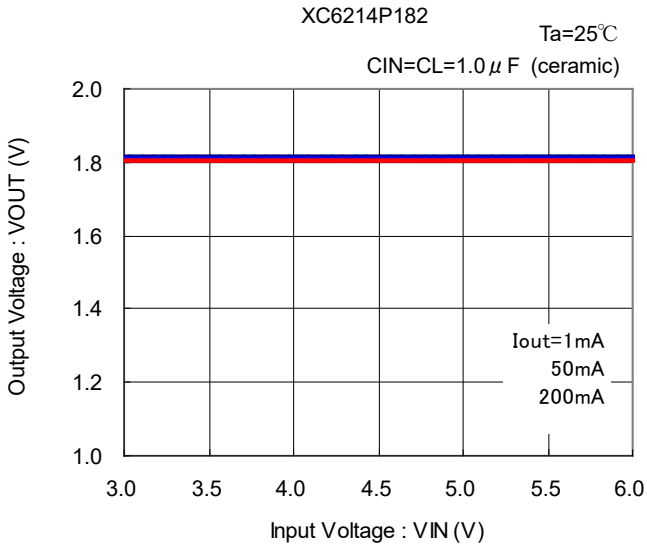

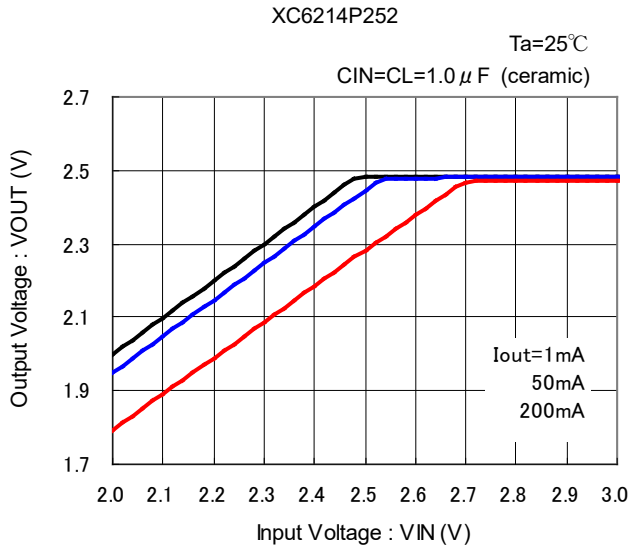

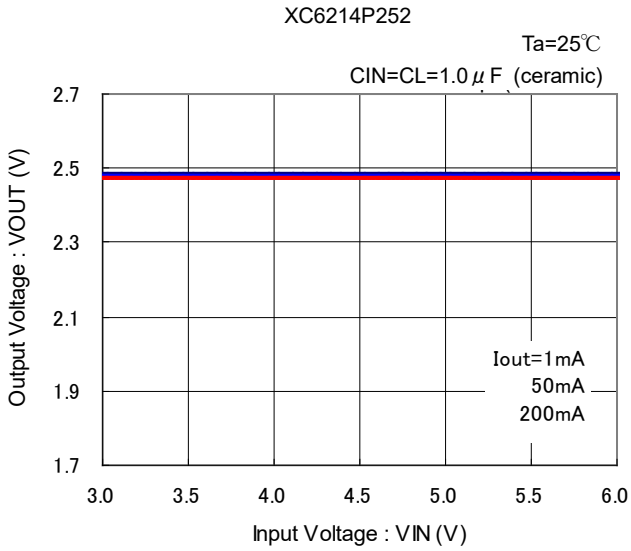

Downloaded from Arrow.com.

■TYPICAL PERFORMANCE CHARACTER (Continued)

(2) Output Voltage vs. Input Voltage (Continued)

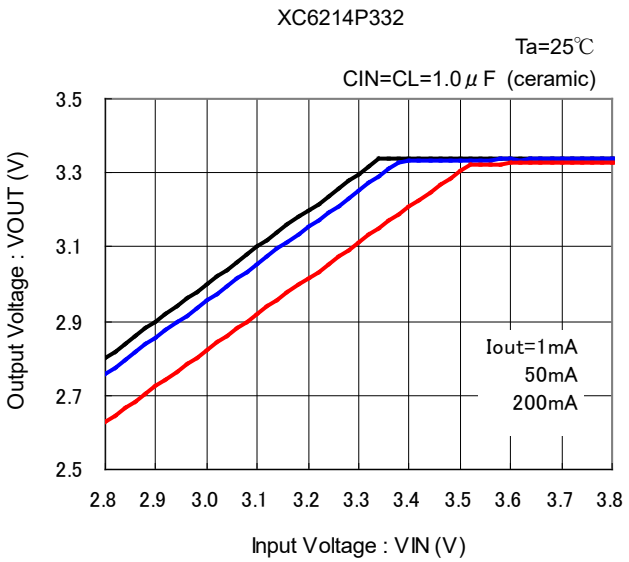

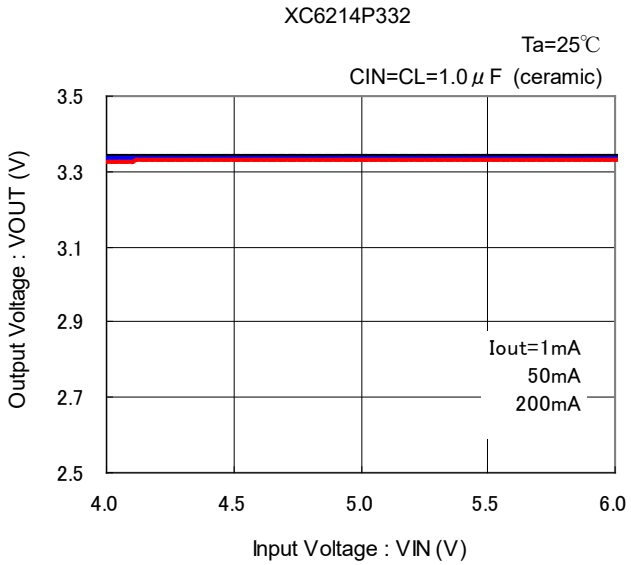

(3) Dropout Voltage vs. Output Current

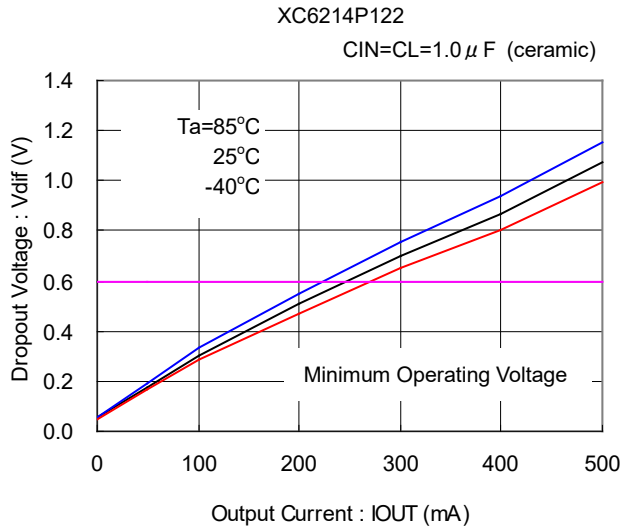

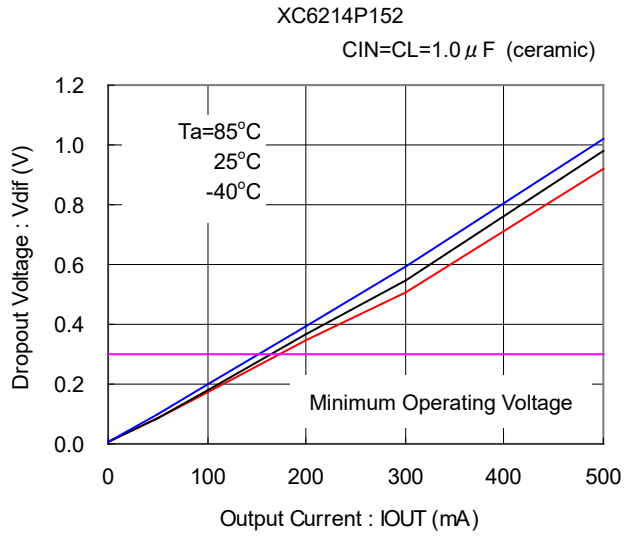

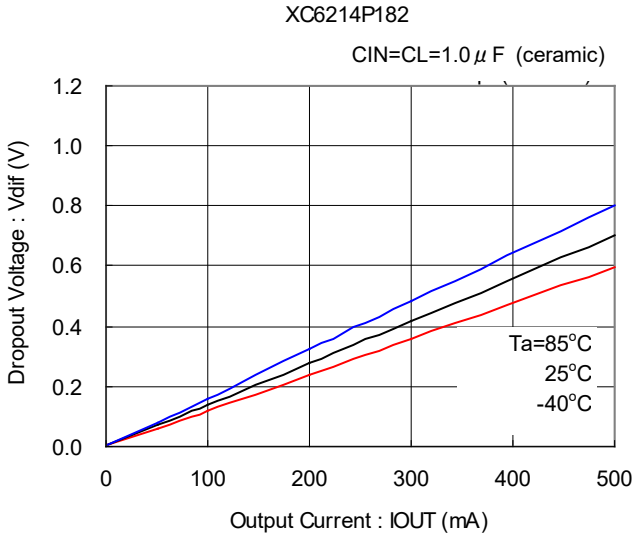

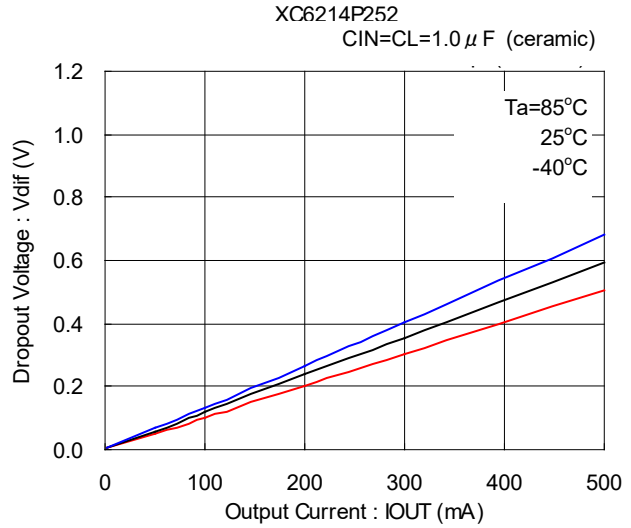

Downloaded from Arrow.com.

■TYPICAL PERFORMANCE CHARACTERISTICS (Continued)

(3) Dropout Voltage vs. Output Current (Continued)

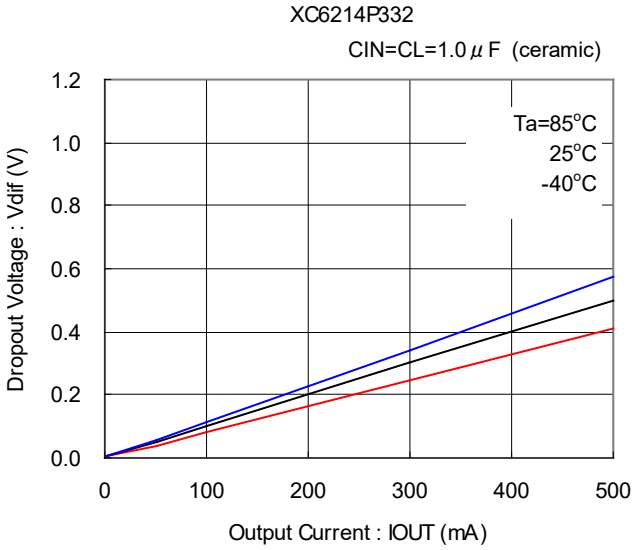

(4) Supply Current vs. Input Voltage

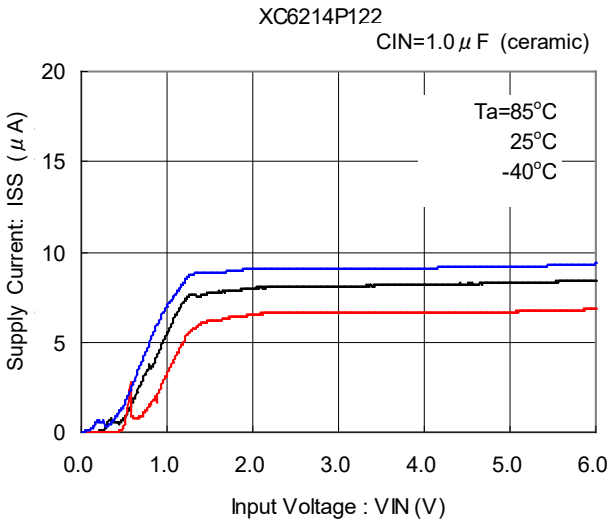

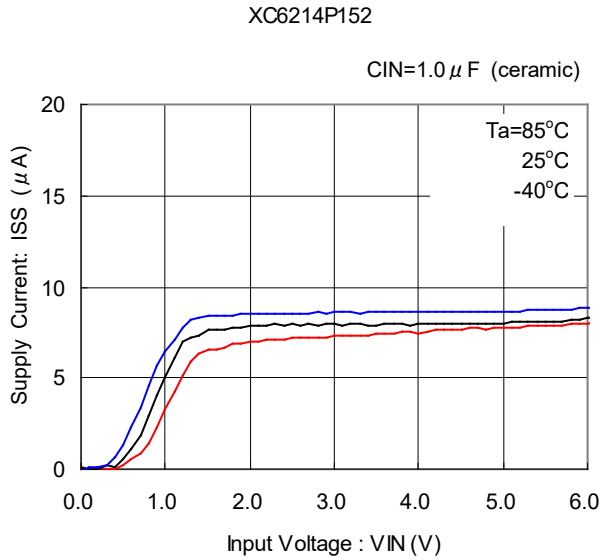

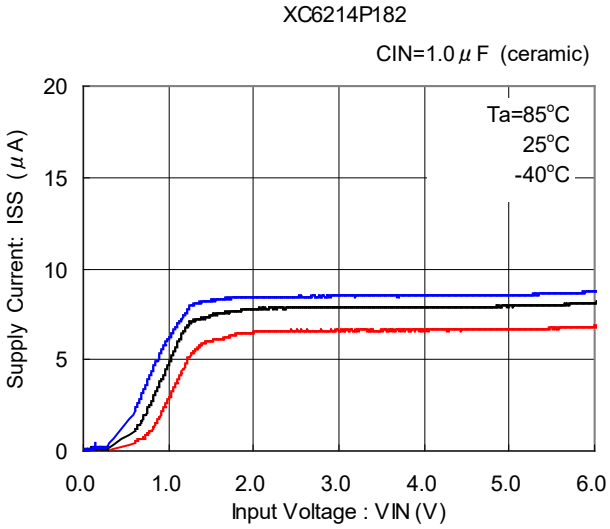

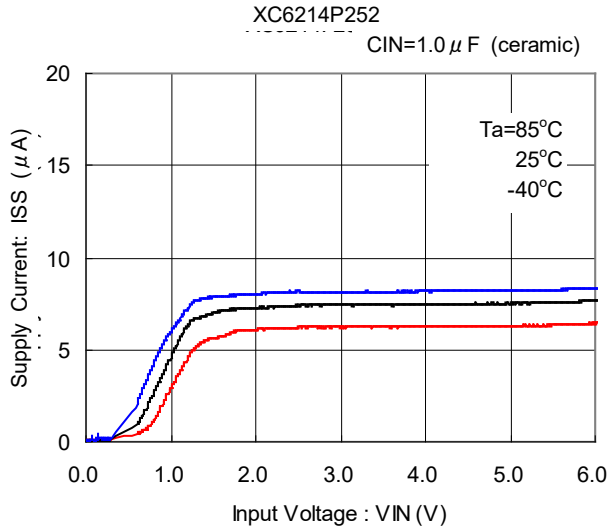

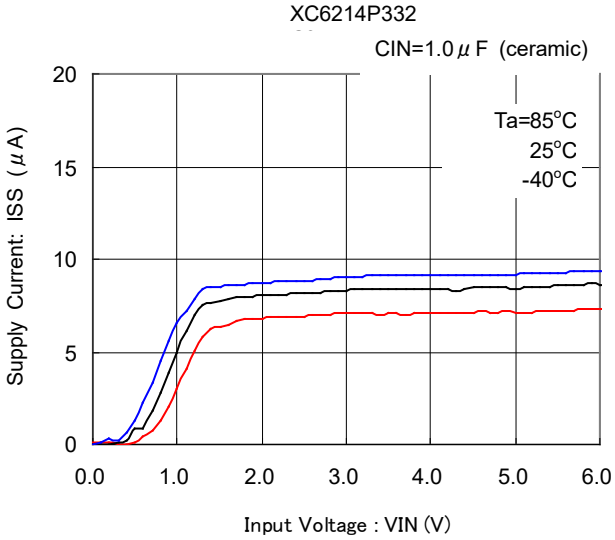

Downloaded from Arrow.com.

■TYPICAL PERFORMANCE CHARACTERISTICS (Continued)

(5) Output Voltage vs. Ambient Temperature

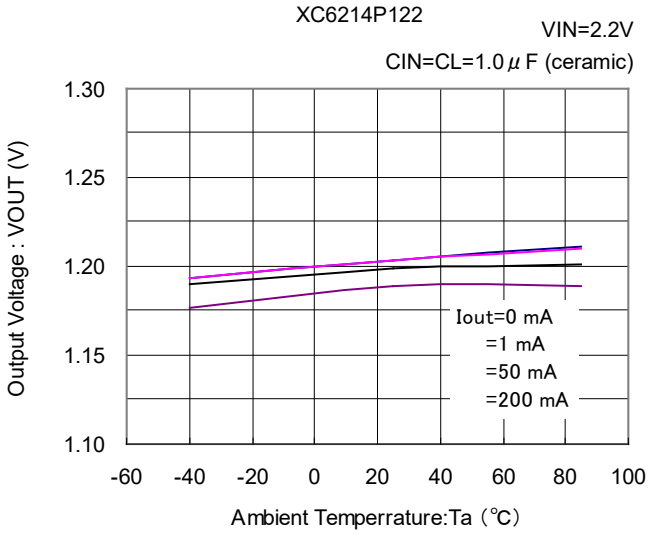

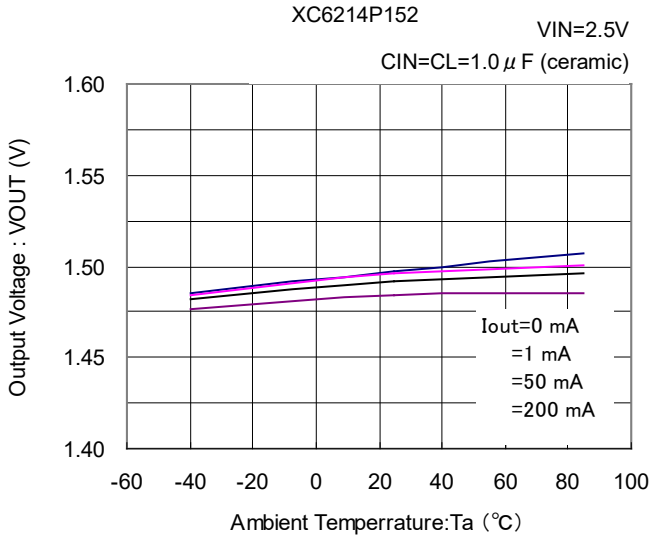

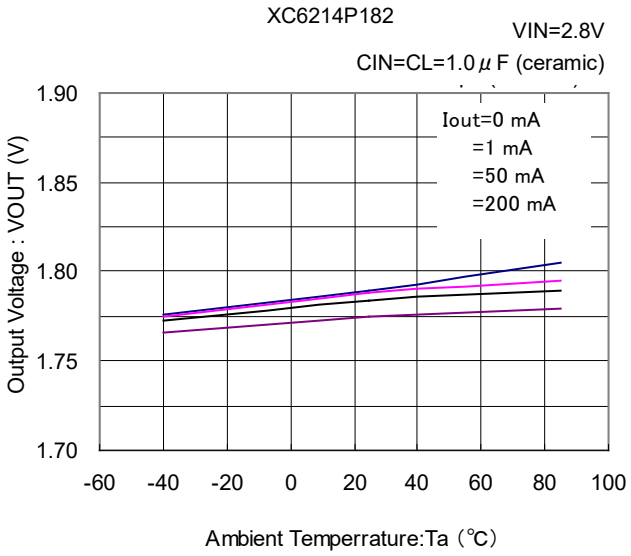

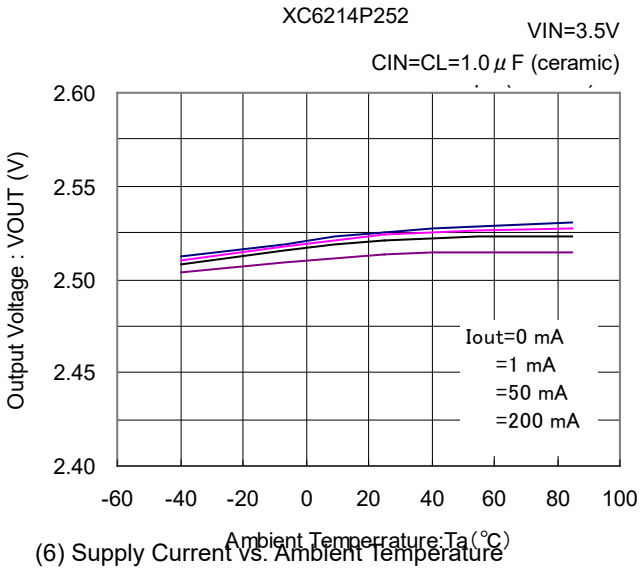

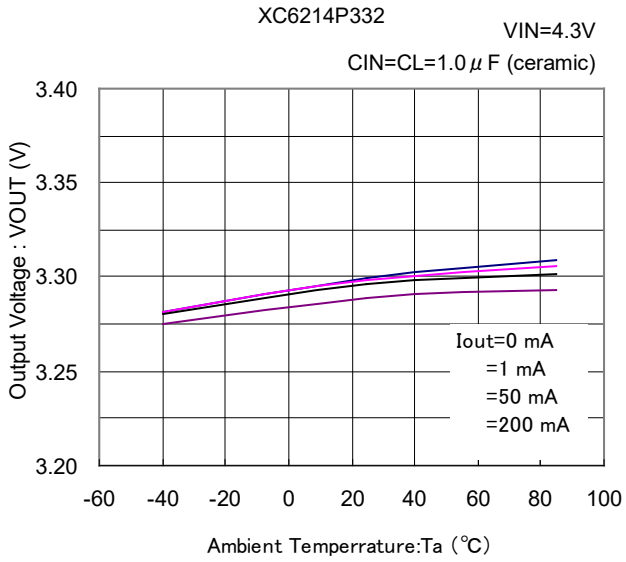

(6) Supply Current vs. Ambient Temperature

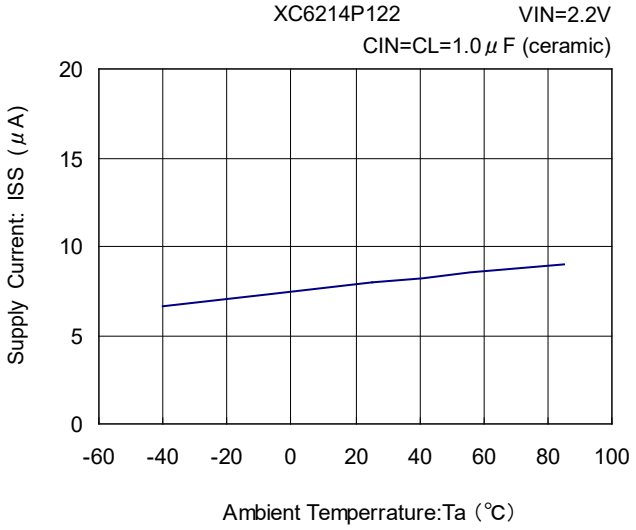

Downloaded from Arrow.com.

■TYPICAL PERFORMANCE CHARACTERISTICS (Continued)

(6) Supply Current vs. Ambient Temperature (Continued)

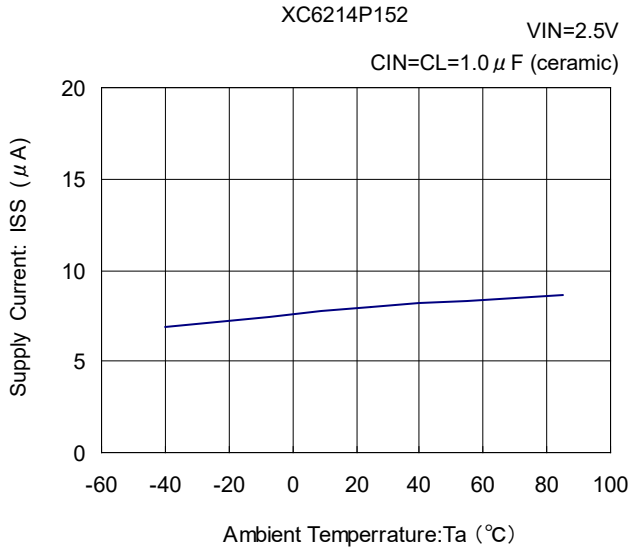

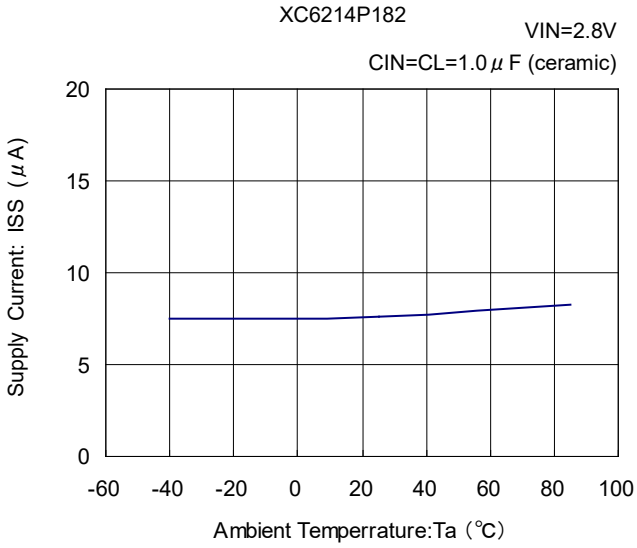

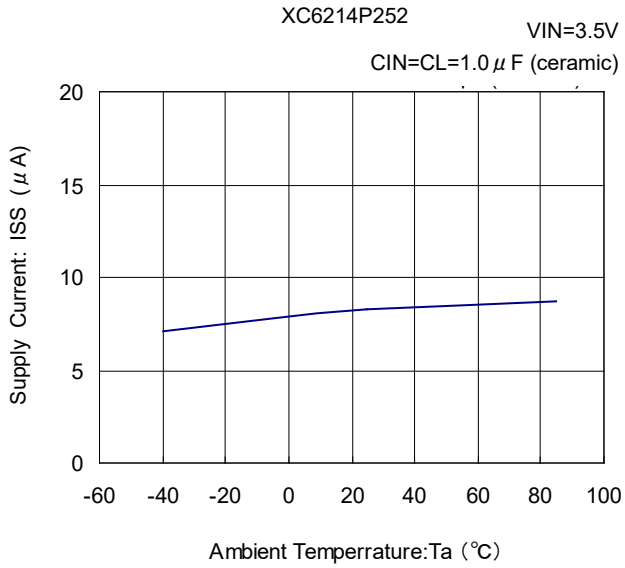

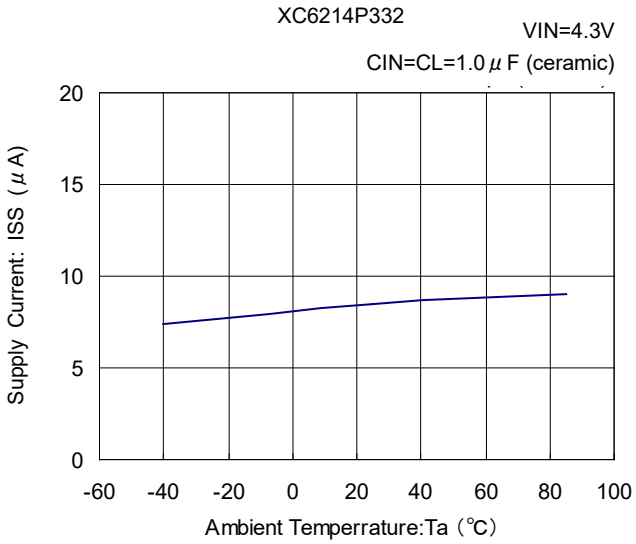

Downloaded from Arrow.com.

■TYPICAL PERFORMANCE CHARACTERISTICS (Continued)

(7) Input Transient Response

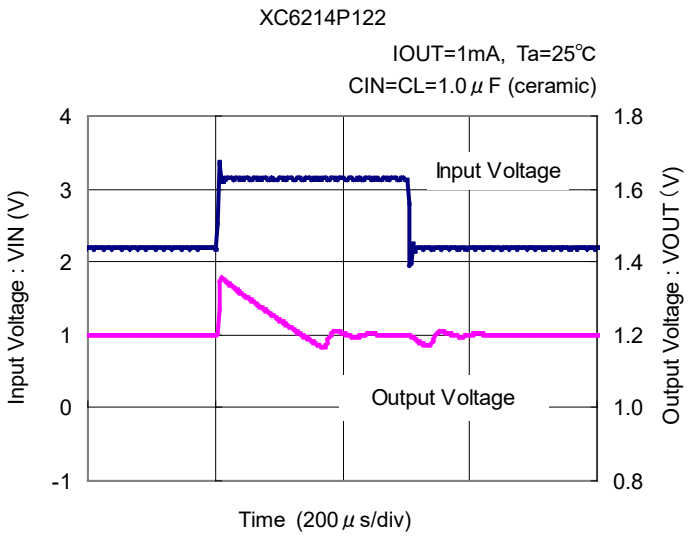

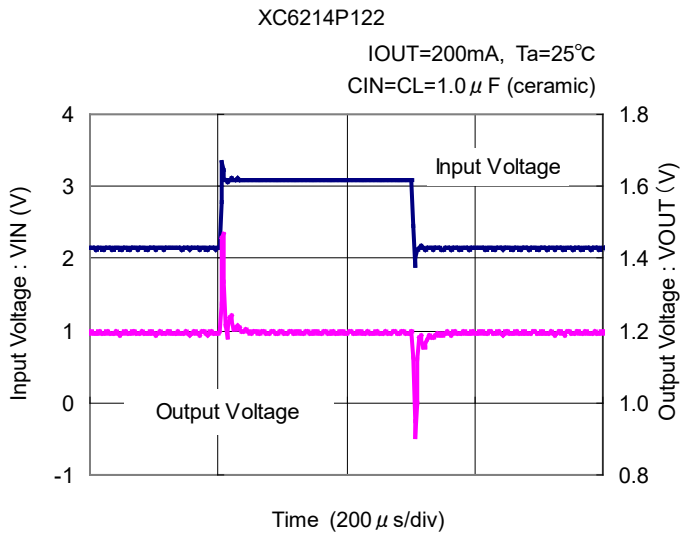

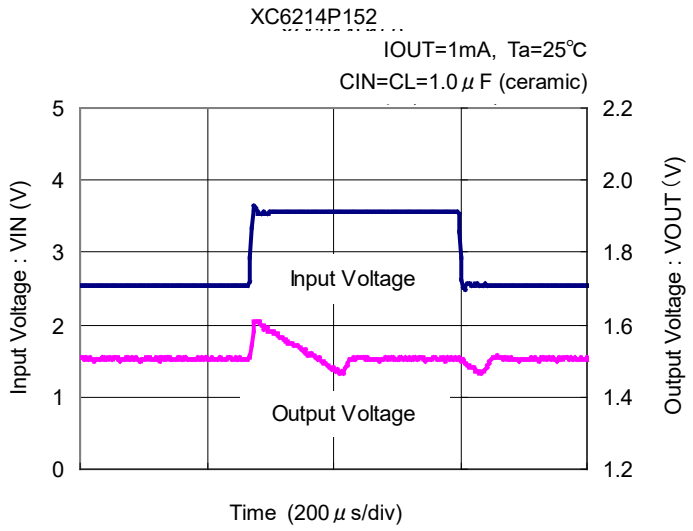

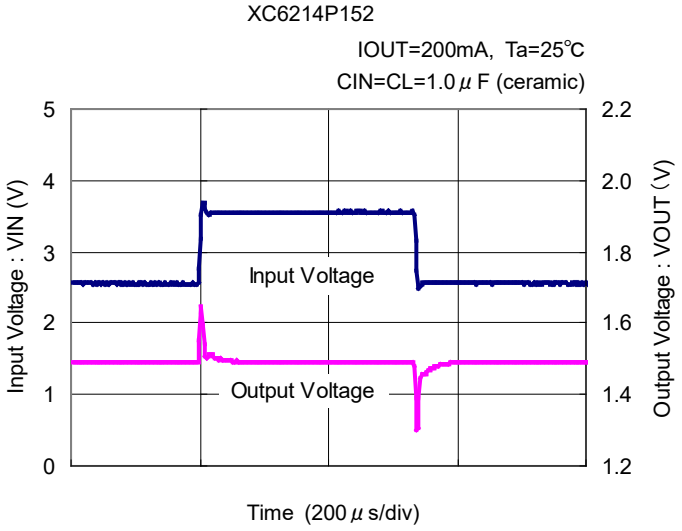

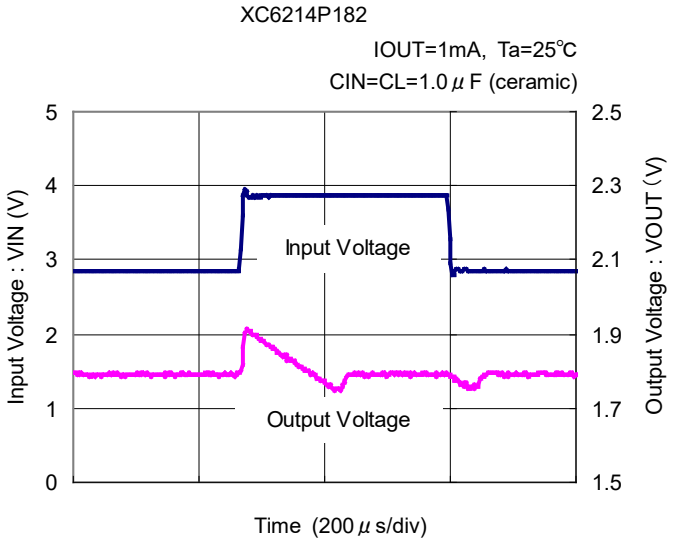

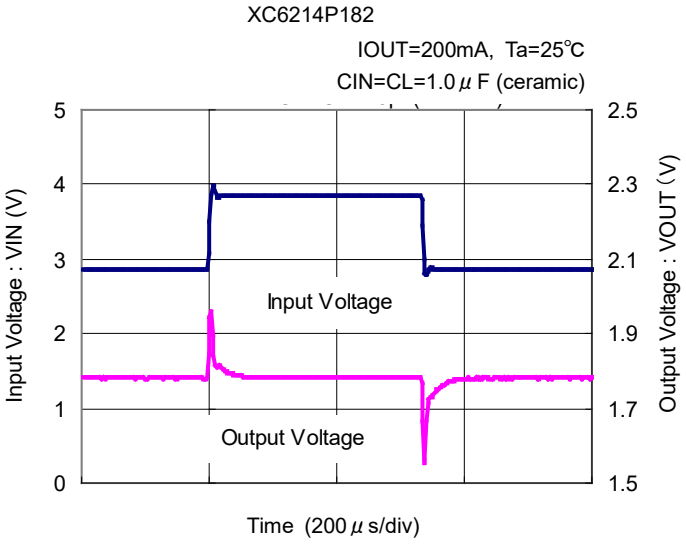

Downloaded from Arrow.com.

■TYPICAL PERFORMANCE CHARACTERISTICS (Continued)

(7) Input Transient Response (Continued)

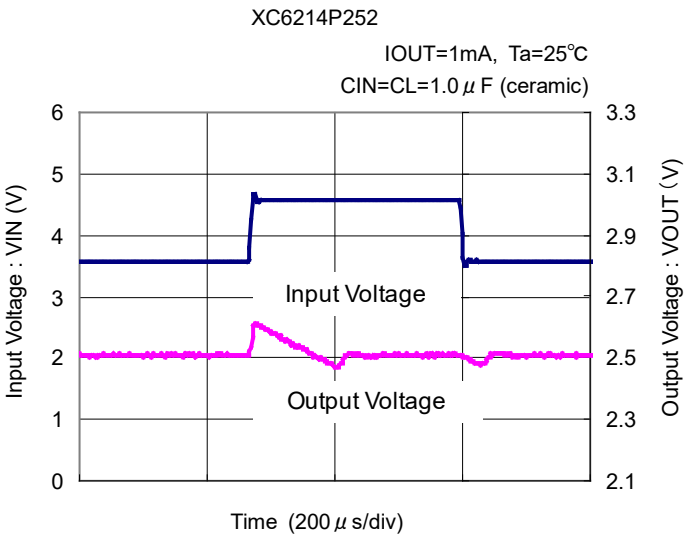

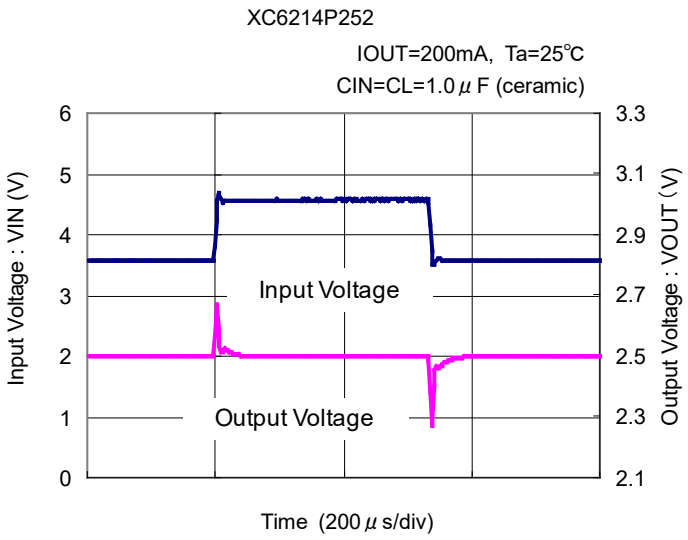

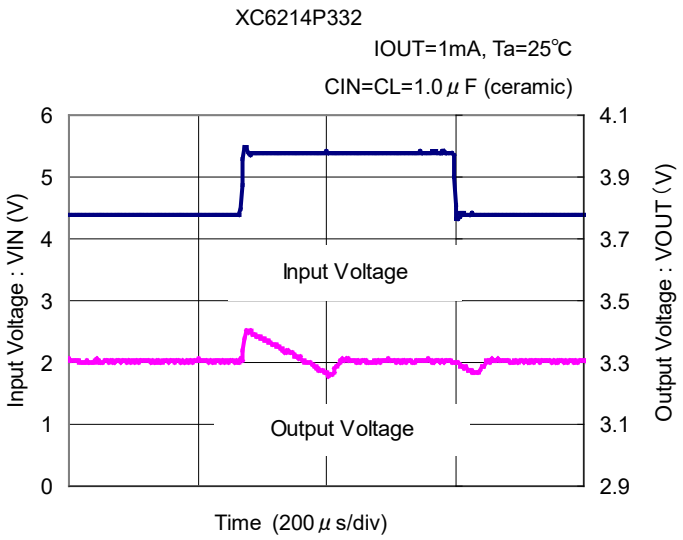

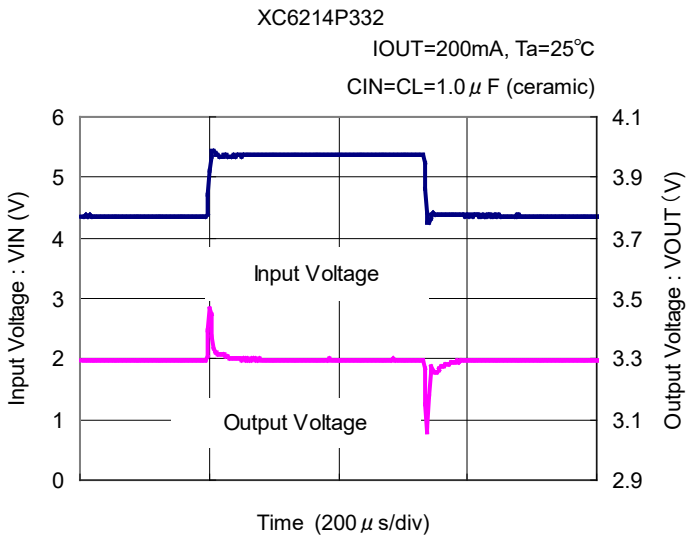

(8) Load Transient Response

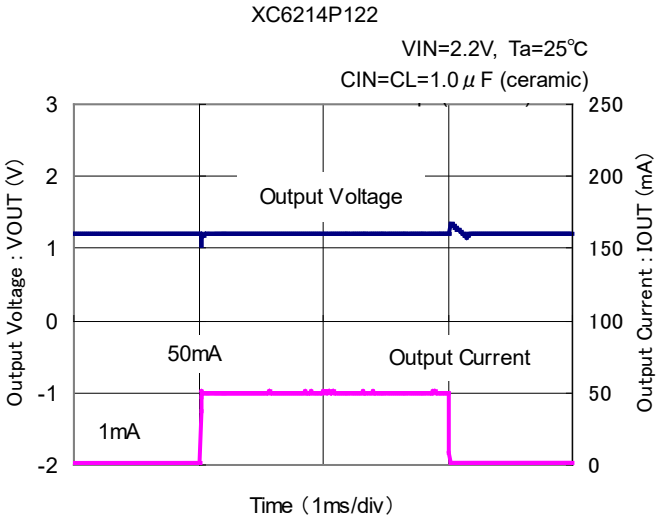

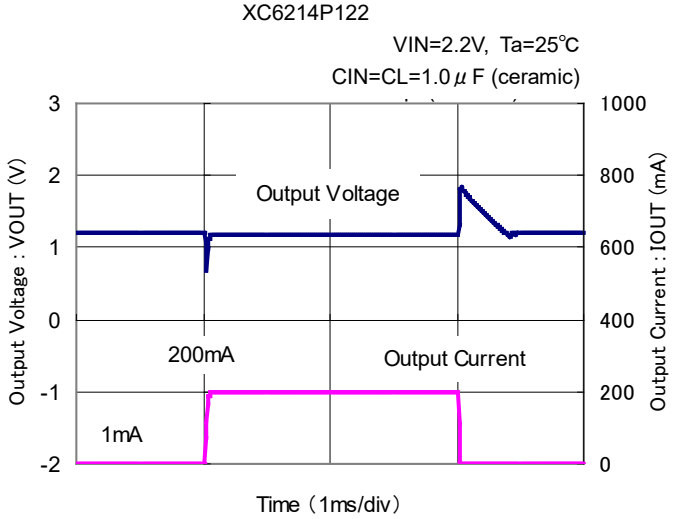

Downloaded from Arrow.com.

■TYPICAL PERFORMANCE CHARACTERISTICS (Continued)

(8) Load Transient Response (Continued)

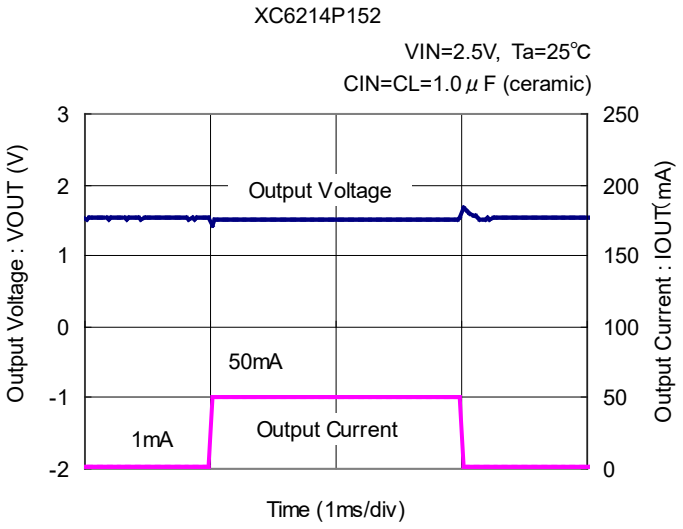

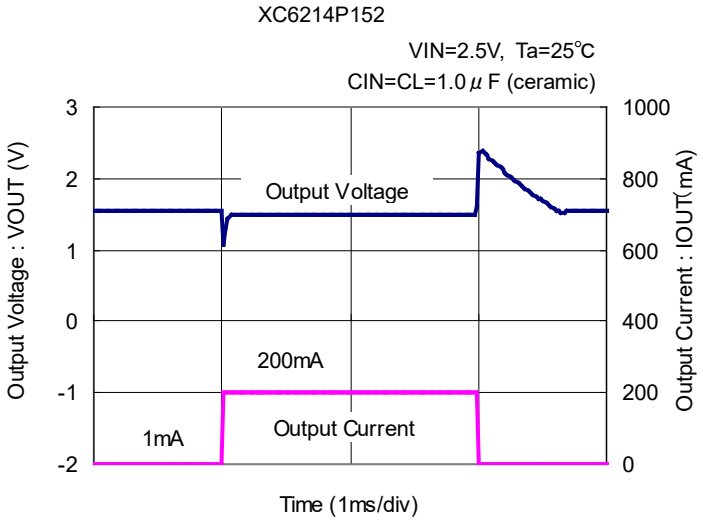

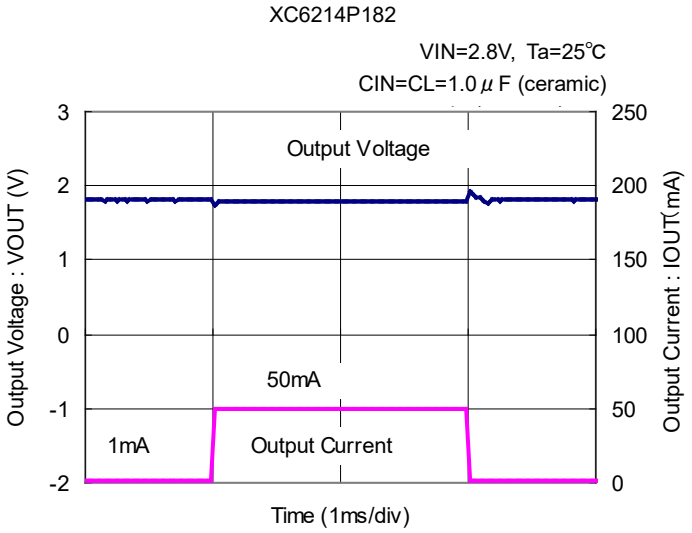

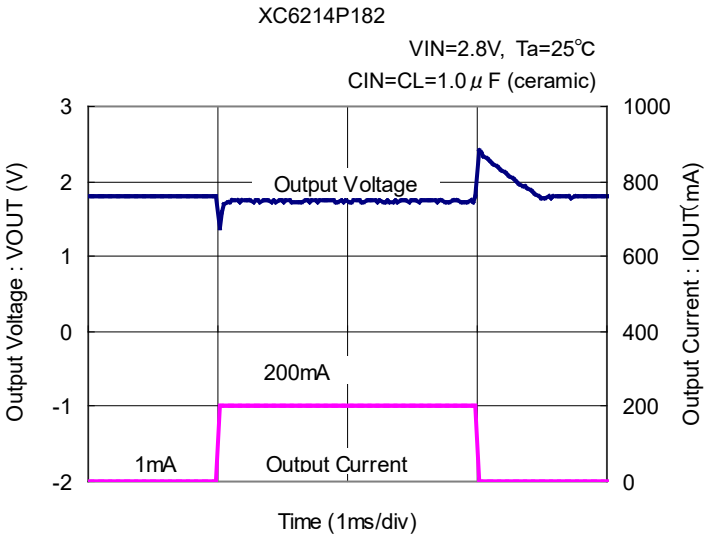

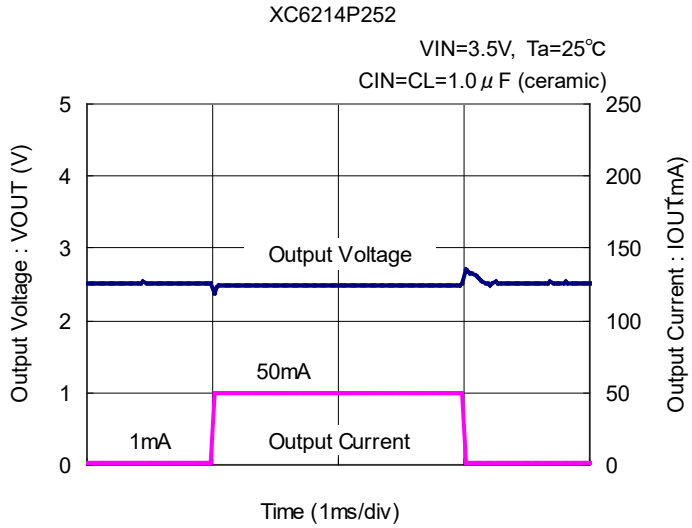

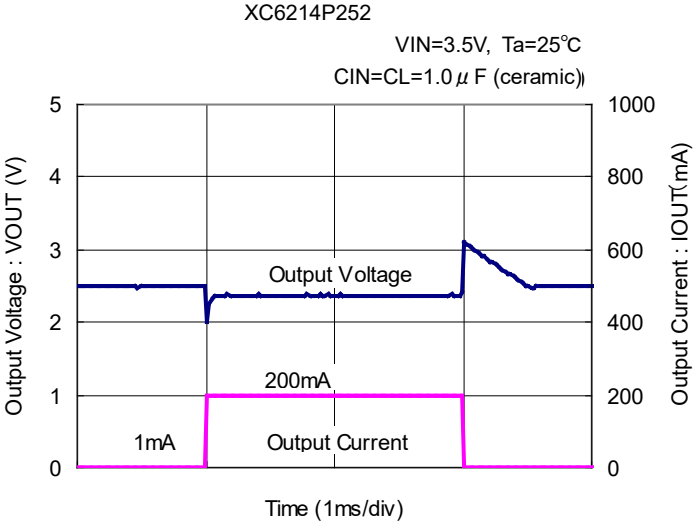

Downloaded from Arrow.com.

■TYPICAL PERFORMANCE CHARACTERISTICS (Continued)

(8) Load Transient Response (Continued)

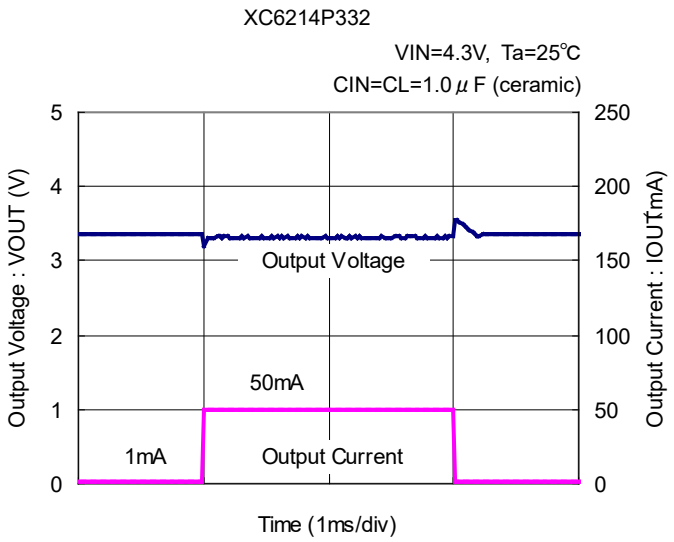

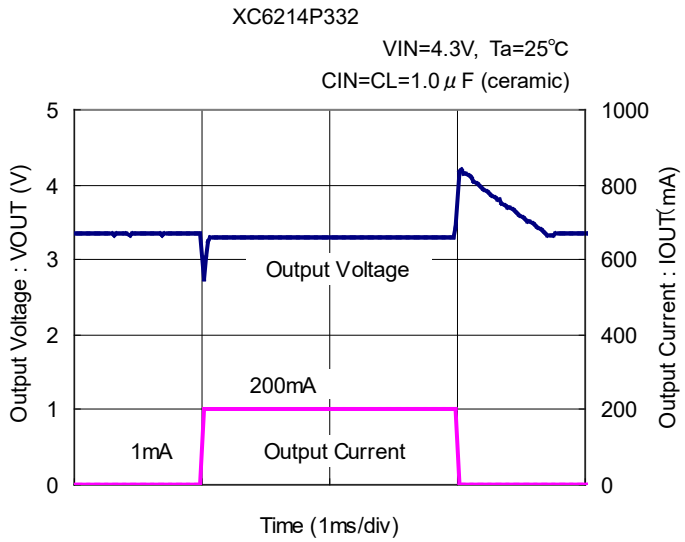

(9) Ripple Rejection Rate

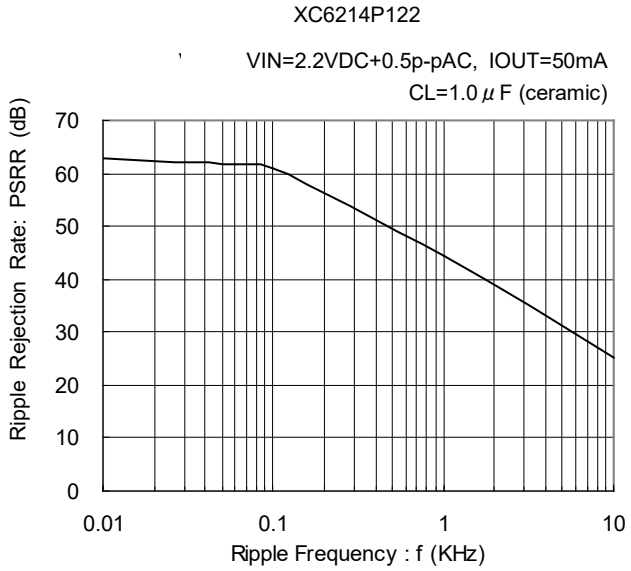

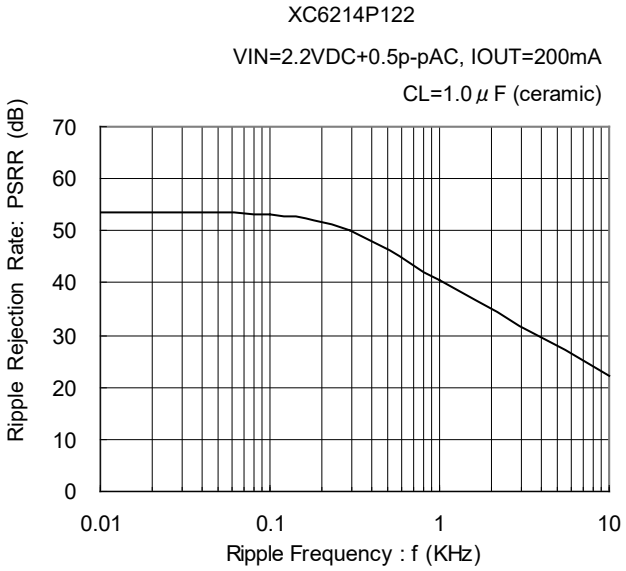

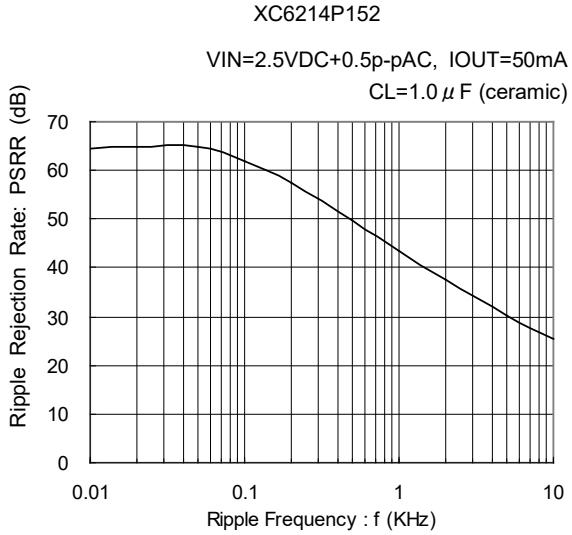

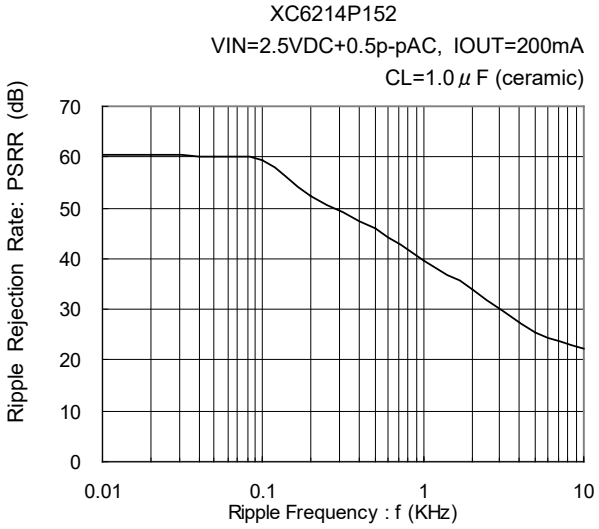

Downloaded from Arrow.com.

XC6214 series is Not Recommended for New Designs.

■TYPICAL PERFORMANCE CHARACTERISTICS (Continued)

(9) Ripple Rejection Rate (Continued)

XC6214P182

VIN=2.8VDC+0.5p-pAC, IOUT=50mA
CL=1.0μF (ceramic)

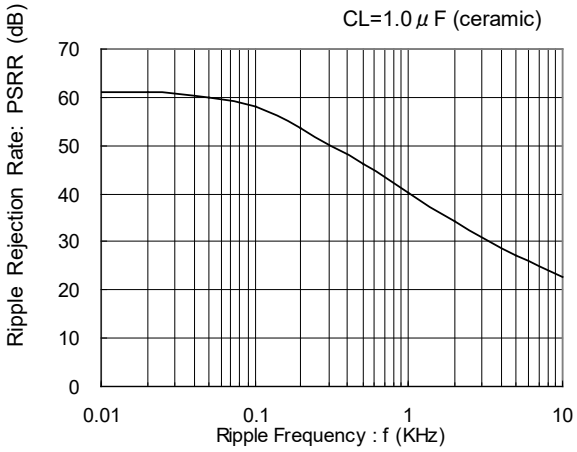

XC6214P182

VIN=2.8VDC+0.5p-pAC, IOUT=200mA
CL=1.0μF (ceramic)

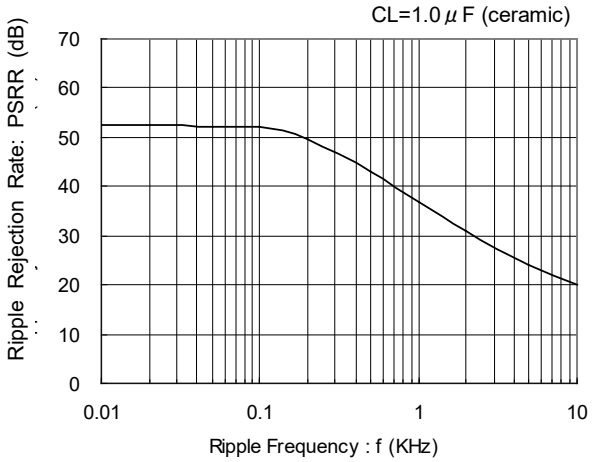

XC6214P252

VIN=3.5VDC+0.5p-pAC, IOUT=50mA
CL=1.0μF (ceramic)

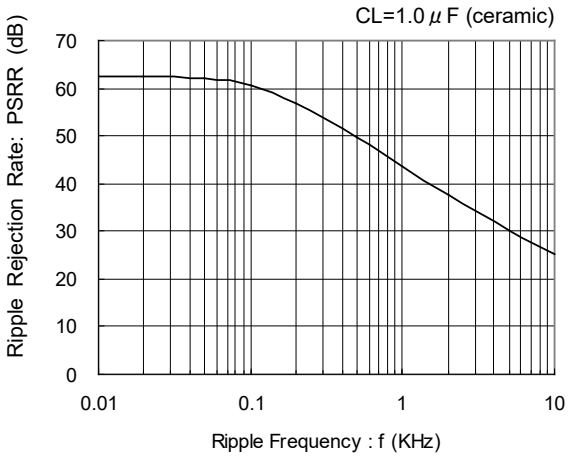

XC6214P252

VIN=3.5VDC+0.5p-pAC, IOUT=200mA
CL=1.0μF (ceramic)

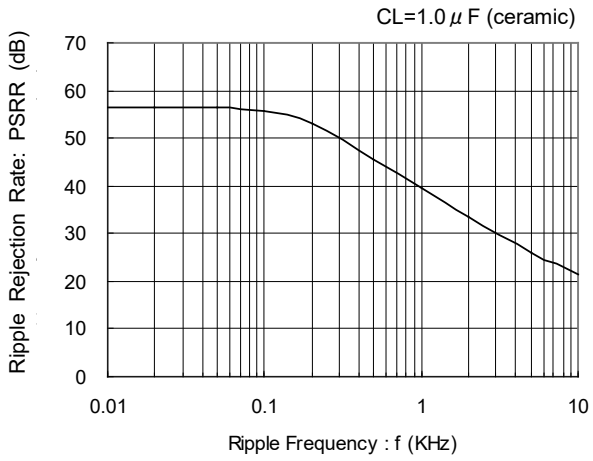

XC6214P332

VIN=4.3VDC+0.5p-pAC, IOUT=50mA
CL=1.0μF (ceramic)

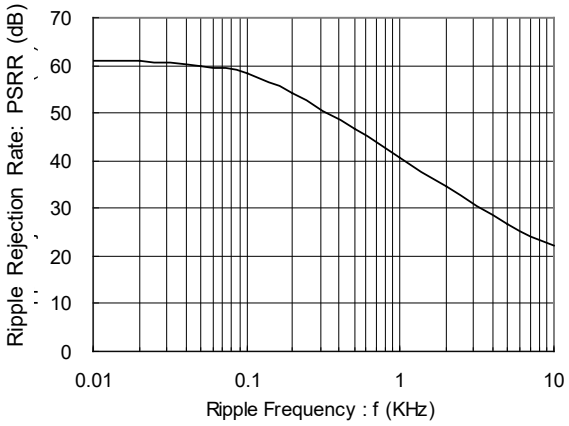

XC6214P332

VIN=4.3VDC+0.5p-pAC, IOUT=200mA
CL=1.0μF (ceramic)

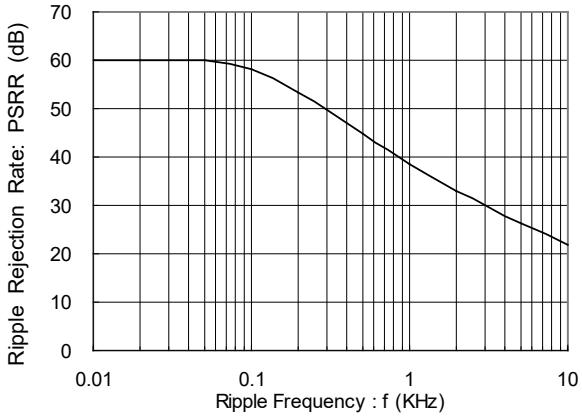

Downloaded from Arrow.com.

■PACKAGING INFORMATION

●SOT-89

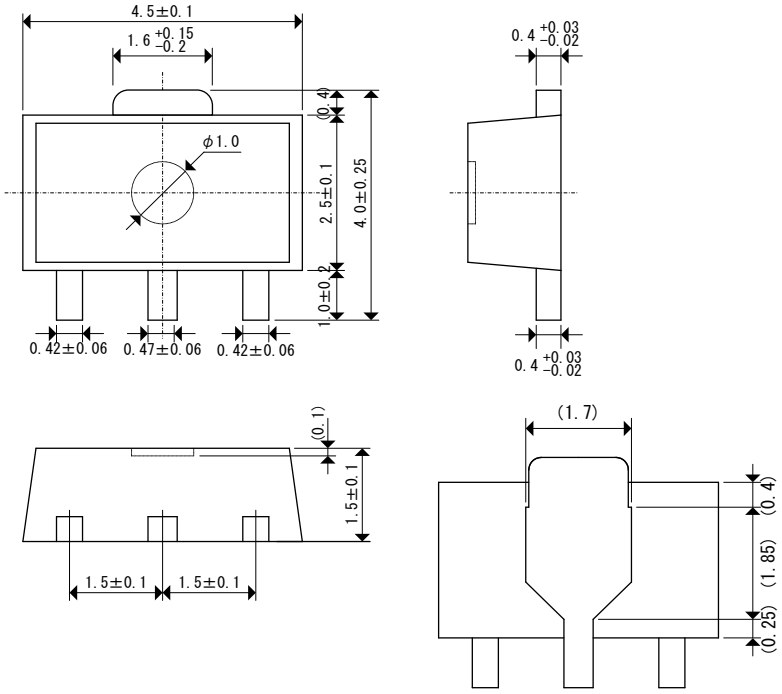

●TO-252

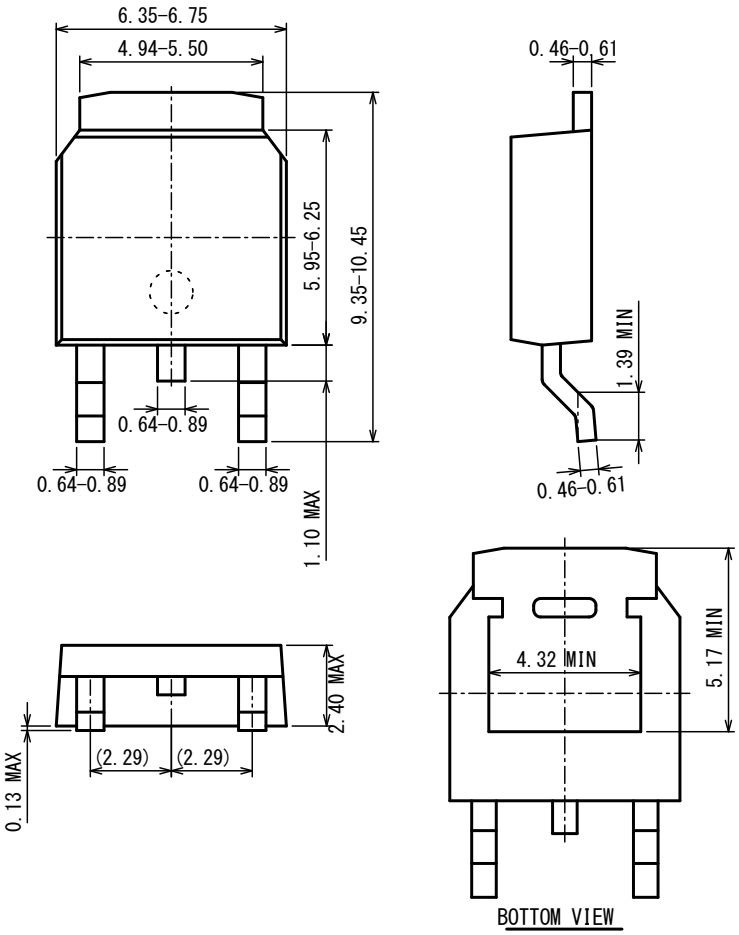

Downloaded from Arrow.com.

● TO-252 Power Dissipation

Power dissipation data for the TO-252 is shown in this page.
The value of power dissipation varies with the mount board conditions.
Please use this data as the reference data taken in the following condition.

1. Measurement Condition

Condition:	Mount on a board
Ambient:	Natural convection
Soldering:	Lead (Pb) free
Board:	Dimensions 40 x 40 mm (1600 mm^2 in one side)
	Copper (Cu) traces occupy 50% of the board area
	In top and back faces
	Package heat-sink is tied to the copper traces
Material:	Glass Epoxy (FR-4)
Thickness:	1.6 mm
Through-hole:	4 x 0.8 Diameter

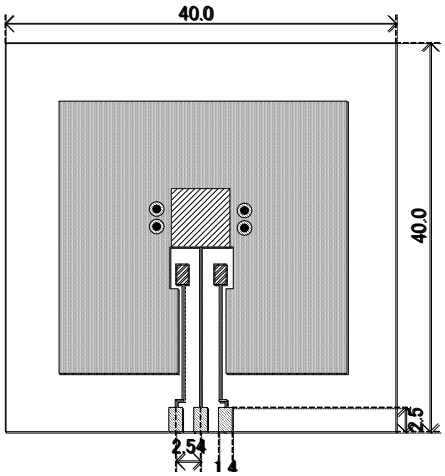

Evaluation Board (Unit: mm)

2. Power Dissipation vs. Ambient Temperature

Board Mount (Tj max = 125℃)

Ambient Temperature (℃)	Power Dissipation Pd (mW)	Thermal Resistance (℃/W)
25	1800	55.56
85	720	

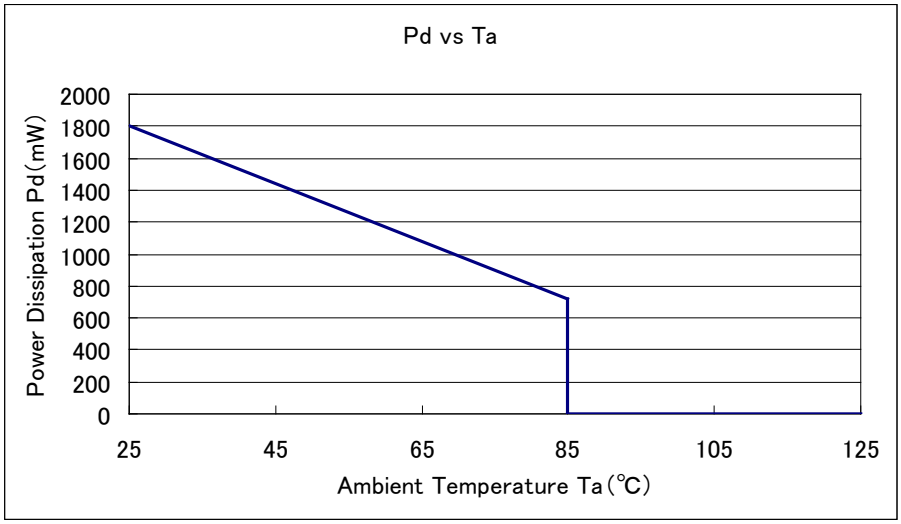

Downloaded from Arrow.com.

● SOT-89 Power Dissipation

Power dissipation data for the SOT-89 is shown in this page.
The value of power dissipation varies with the mount board conditions.
Please use this data as the reference data taken in the following condition.

1. Measurement Condition

Condition:	Mount on a board
Ambient:	Natural convection
Soldering:	Lead (Pb) free
Board:	Dimensions 40 x 40 mm (1600 mm^2 in one side)
	Copper (Cu) traces occupy 50% of the board area
	In top and back faces
	Package heat-sink is tied to the copper traces
Material:	Glass Epoxy (FR-4)
Thickness:	1.6 mm
Through-hole:	5 x 0.8 Diameter

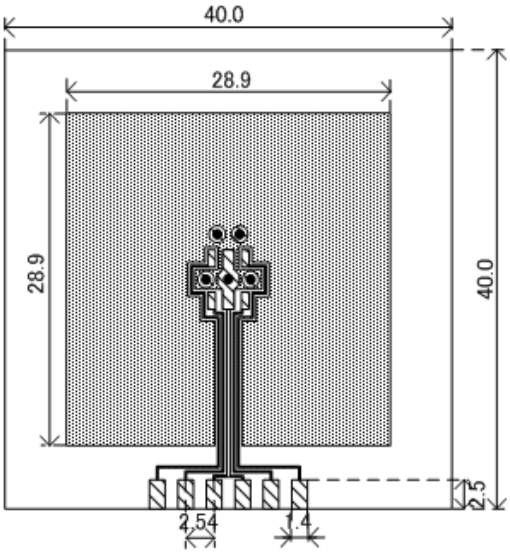

Evaluation Board (Unit: mm)

2. Power Dissipation vs. Ambient Temperature

Board Mount (Tj max = 125℃)

Ambient Temperature(℃)	Power Dissipation Pd(mW)	Thermal Resistance (℃/W)
25	1000	100.00
85	400	

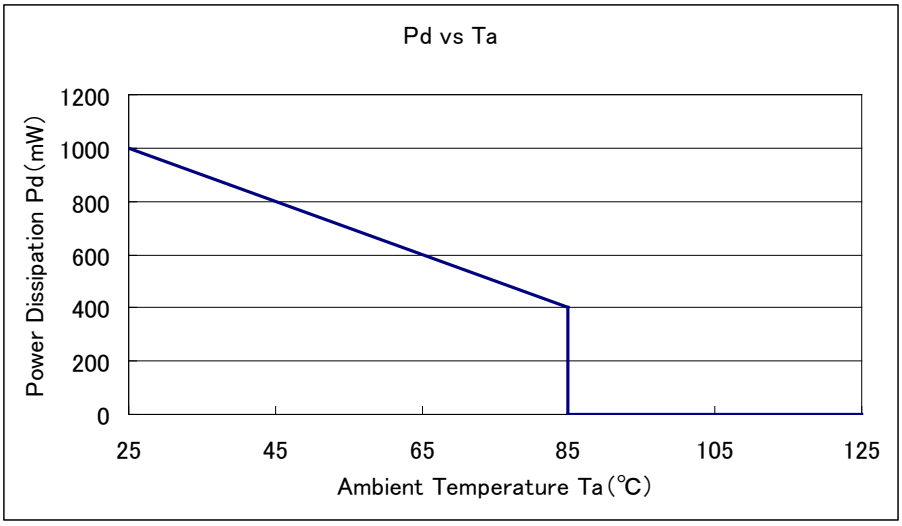

Downloaded from Arrow.com.

■MARKING RULE

●SOT-89, TO-252

（mark header：①～③）　*Mark header does not change with a lot.

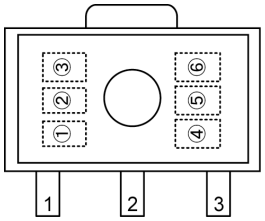

SOT－89
(TOP VIEW)

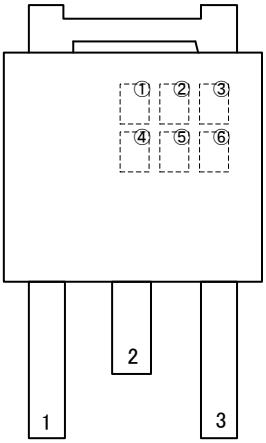

TO－252
(TOP VIEW)

① represents product series

MARK	PRODUCT SERIES
D	XC6214Pxx2xx

② represents output voltage range

MARK	VOLTAGE (V)	PRODUCT SERIES
P	1.2 ~ 3.0	XC6214Pxx2xx
R	3.1 ~ 5.0	XC6214Pxx2xx

③ represents output voltage

MARK	VOLTAGE (V)		MARK	VOLTAGE (V)	
0	-	3.1	F	1.6	4.6
1	-	3.2	H	1.7	4.7
2	-	3.3	K	1.8	4.8
3	-	3.4	L	1.9	4.9
4	-	3.5	M	2.0	5.0
5	-	3.6	N	2.1	-
6	-	3.7	P	2.2	-
7	-	3.8	R	2.3	-
8	-	3.9	S	2.4	-
9	-	4.0	T	2.5	-
A	-	4.1	U	2.6	-
B	1.2	4.2	V	2.7	-
C	1.3	4.3	W	2.8	-
D	1.4	4.4	Y	2.9	-
E	1.5	4.5	Z	3.0	-

④ represents the last digit of the production year (ex.)

MARK	PRODUCTION YEAR
6	2006
7	2007

⑤ represents the production month

MARK	MONTH	MARK	MONTH	MARK	MONTH
A	January	E	May	J	September
B	February	F	June	K	October
C	March	G	July	L	November
D	April	H	August	M	December

⑥ represents production lot number
0 to 9, A to Z repeated (G, I, J, O, Q, W excluded).
Note: No character inversion used.

Downloaded from Arrow.com.

1. The products and product specifications contained herein are subject to change without notice to improve performance characteristics. Consult us, or our representatives before use, to confirm that the information in this datasheet is up to date.
2. We assume no responsibility for any infringement of patents, patent rights, or other rights arising from the use of any information and circuitry in this datasheet.
3. Please ensure suitable shipping controls (including fail-safe designs and aging protection) are in force for equipment employing products listed in this datasheet.
4. The products in this datasheet are not developed, designed, or approved for use with such equipment whose failure of malfunction can be reasonably expected to directly endanger the life of, or cause significant injury to, the user.
   (e.g. Atomic energy; aerospace; transport; combustion and associated safety equipment thereof.)
5. Please use the products listed in this datasheet within the specified ranges.
   Should you wish to use the products under conditions exceeding the specifications, please consult us or our representatives.
6. We assume no responsibility for damage or loss due to abnormal use.
7. All rights reserved. No part of this datasheet may be copied or reproduced without the prior permission of TOREX SEMICONDUCTOR LTD.

TOREX SEMICONDUCTOR LTD.

Downloaded from Arrow.com.